390-061
Submersible EMI/RFI Cable Sealing Backshell
with Strain Relief
Type G - Rotatable Coupling -Split Shell

CONNECTOR DESIGNATORS

A-F-H-L-S

ROTATABLE COUPLING

TYPE G INDIVIDUAL AND/OR OVERALL SHIELD TERMINATION

390 F P 061 M 16 10 H

- Product Series — 390
- Connector Designator — F
- Angle and Profile — P
  - P = Split 45°
  - R = Split 90°
- Basic Part No. — 061
- Finish (Table II) — M
- Shell Size (Table I) — 16
- Cable Entry (Tables X, XI) — 10
- Strain Relief Style (H, A, M, D) — H

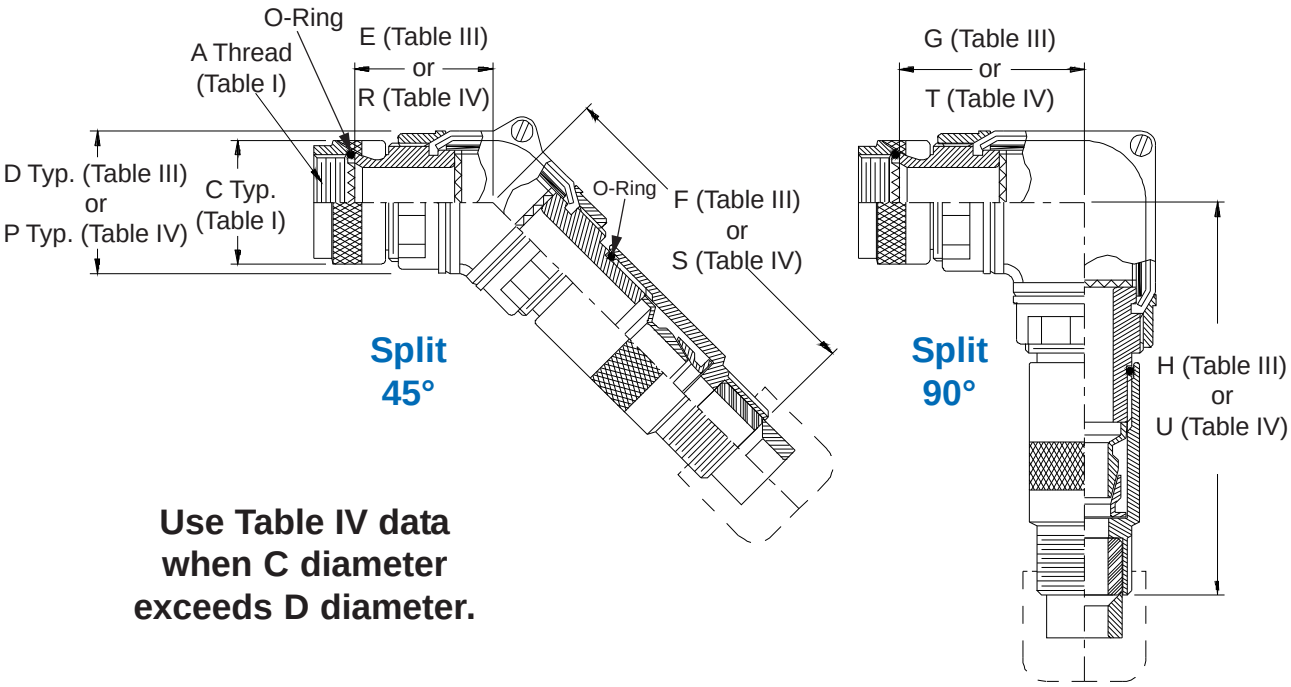

Use Table IV data when C diameter exceeds D diameter.

STYLE H
Heavy Duty
(Table X)

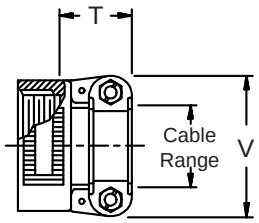

STYLE A
Medium Duty
(Table XI)

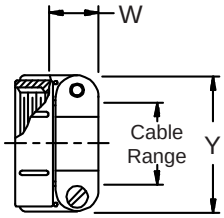

STYLE M
Medium Duty
(Table XI)

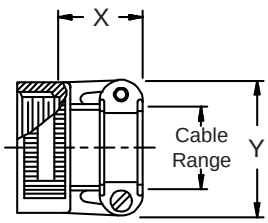

STYLE D
Medium Duty
(Table XI)

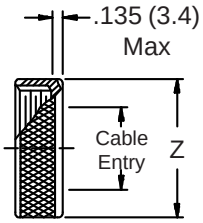

© 2005 Glenair, Inc. CAGE Code 06324 Printed in U.S.A.

390-061
Submersible EMI/RFI Cable Sealing Backshell
with Strain Relief
Type G - Rotatable Coupling - Split Shell

TABLE III

Shell Size Conn. Desig. A-F-L-S	H	D Max	E Max	F Max	G Max	H Max
08	09	1.188 (30.2)	1.781 (45.2)	4.406 (111.9)	1.781 (45.2)	4.406 (111.9)
10	11	1.188 (30.2)	1.781 (45.2)	4.406 (111.9)	1.781 (45.2)	4.406 (111.9)
12	13	1.188 (30.2)	1.781 (45.2)	4.406 (111.9)	1.781 (45.2)	4.406 (111.9)
14	15	1.188 (30.2)	1.781 (45.2)	4.406 (111.9)	1.781 (45.2)	4.406 (111.9)
16	17	1.438 (36.5)	1.906 (48.4)	4.531 (115.1)	1.906 (48.4)	4.531 (115.1)
18	19	1.438 (36.5)	1.906 (48.4)	4.531 (115.1)	1.906 (48.4)	4.531 (115.1)
20	21	1.438 (36.5)	1.906 (48.4)	4.531 (115.1)	1.906 (48.4)	4.531 (115.1)
22	23	1.688 (42.9)	2.031 (51.6)	4.656 (118.3)	2.031 (51.6)	4.656 (118.3)
24	25	1.688 (42.9)	2.031 (51.6)	4.656 (118.3)	2.031 (51.6)	4.656 (118.3)

TABLE IV

Dash No.	P Max	R Max	S Max	T Max	U Max
08	1.438 (36.5)	1.906 (48.4)	4.531 (115.1)	1.906 (48.4)	4.531 (115.1)
10	1.688 (42.9)	2.031 (51.6)	4.656 (118.3)	2.031 (51.6)	4.656 (118.3)
12	1.688 (42.9)	2.031 (51.6)	4.656 (118.3)	2.031 (51.6)	4.656 (118.3)
16	1.688 (42.9)	2.031 (51.6)	4.656 (118.3)	2.031 (51.6)	4.656 (118.3)
20	2.188 (55.6)	2.281 (57.9)	4.906 (124.6)	2.281 (57.9)	4.906 (124.6)
24	2.188 (55.6)	2.281 (57.9)	4.906 (124.6)	2.281 (57.9)	4.906 (124.6)
28	2.688 (68.3)	2.531 (64.3)	5.156 (131.0)	2.531 (64.3)	5.156 (131.0)

See inside back cover fold-out or pages 13 and 14 for Tables I and II.

TABLE X

Dash No.	T Max	V Max	Cable Range Min	Cable Range Max
04	.780 (19.8)	.957 (24.3)	.125 (3.2)	.312 (7.9)
06	.780 (19.8)	1.145 (29.1)	.250 (6.4)	.437 (11.1)
08	.780 (19.8)	1.332 (33.8)	.387 (9.8)	.562 (14.3)
10	.780 (19.8)	1.332 (33.8)	.350 (8.9)	.625 (15.9)
12	.811 (20.6)	1.551 (39.4)	.500 (12.7)	.750 (19.1)
16	.905 (23.0)	1.770 (45.0)	.625 (15.9)	.937 (23.8)
20	1.092 (27.7)	2.113 (53.7)	.875 (22.2)	1.250 (31.8)
24	1.124 (28.5)	2.363 (60.0)	1.000 (25.4)	1.375 (34.9)
28	1.399 (35.5)	2.770 (70.4)	1.250 (31.8)	1.625 (41.3)

1. Metric dimensions (mm) are indicated in parentheses.
2. Cable range is defined as the accommodations range for the wire bundle or cable. Dimensions shown are not intended for inspection criteria.
3. Interface O-Ring not supplied with connector designator A.

TABLE XI

Dash No.	W Max	X Max	Y Max	Z Max	Cable Range Min	Cable Range Max
03*	.437 (11.1)	.760 (19.3)	.843 (21.4)	.630 (16.0)	.156 (4.0)	.250 (6.4)
04*	.437 (11.1)	.760 (19.3)	.906 (23.0)	.755 (19.2)	.188 (4.8)	.312 (7.9)
06*	.500 (12.7)	.760 (19.3)	1.093 (27.8)	.942 (23.9)	.281 (7.1)	.438 (11.1)
08	.563 (14.3)	.760 (19.3)	1.187 (30.1)	1.067 (27.1)	.387 (9.8)	.562 (14.3)
10	.563 (14.3)	.760 (19.3)	1.281 (32.5)	1.192 (30.3)	.375 (9.5)	.625 (15.9)
12	.563 (14.3)	.760 (19.3)	1.500 (38.1)	1.380 (35.1)	.438 (11.1)	.750 (19.1)
16	.656 (16.7)	1.073 (27.3)	1.719 (43.7)	1.535 (39.0)	.625 (15.9)	.938 (23.8)
20	.656 (16.7)	1.323 (33.6)	2.062 (52.4)	1.848 (46.9)	.875 (22.2)	1.250 (31.8)
24	.656 (16.7)	1.323 (33.6)	2.312 (58.7)	2.255 (57.3)	1.000 (25.4)	1.375 (34.9)
28	1.188 (30.2)	1.572 (39.9)	2.719 (69.1)	2.505 (63.6)	1.250 (31.8)	1.625 (41.3)

* Not available in Style M clamp.

© 2005 Glenair, Inc. CAGE Code 06324 Printed in U.S.A.