DEEP WATER

SERIES 701

SeaKing™ Junior

High-density, dry-mate, harsh-environment connectors and cables for lighter-duty ROV applications such as lights and sensors

High-density Series 701 SeaKing Junior connectors are the perfect choice for harsh-environment oil & gas industry equipment. All designs are equipped with single piston seal nitrile O-rings to withstand exposure to corrosive chemicals and high-pressure environments. These 5000 PSI pressure rated (mated condition, shell size dependent) connectors feature high-density crimp-contact or solder cup inserts, and are significantly smaller than our larger form-factor heavy-duty series 700 SeaKing interconnects. Gold-plated crimp contacts accept #12–30 gage wire. SeaKing Junior connectors are backfilled with epoxy potting compound, ready for easy incorporation into overmolded cables. Crimp-contact versions for field installation and repair are also available. SeaKing Junior is specifically designed for high-pressure, mated condition applications that do not require the extra fail-safe features and cost of an open-face rated solution.

- **5000 PSI (mated condition) pressure rated connector for overmolded (non-PBOF) applications**
- **High density, small form-factor solution—up to 50% reduction in size and weight compared to industry standard solutions**
- **Ultraminiature high-density pin configurations: #22D, #20, #20HD, #16, #12, #8 signal, power, fiber optic and high-speed datalink shielded contacts**

SEAKING™ JUNIOR OVERMOLDED CABLES AND PIGTAIL ASSEMBLIES

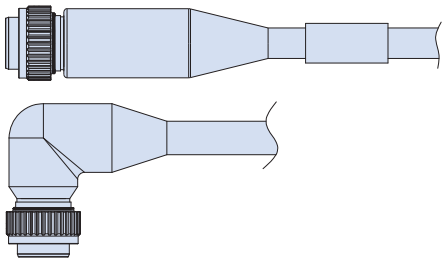

Harsh-environment polyurethane overmolded point-to-point cables with straight or right-angle ends, one-to-one wiring

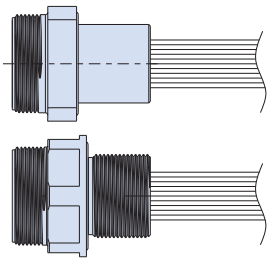

Pigtail receptacle assemblies, variable cable length, single-conductor M22759/11 wire, environmental back-end potting

All featured insert arrangements tooled and available now including high-density and combo layouts for Coax, Twinax, and El Ochito® octaxial contacts

SERIES 701 SeaKing™ Junior

High-Density Dry-Mate Connectors

5000 PSI piston-sealed connectors and cables

SERIES 701 SEAKING™ JUNIOR MECHANICAL FEATURES AND CONFIGURATIONS

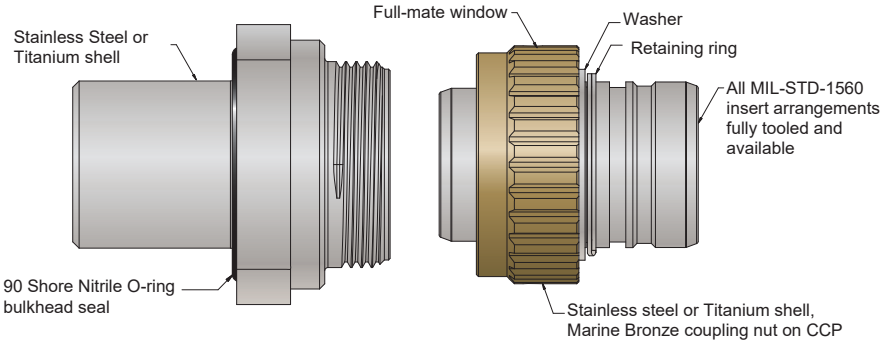

Flange Connector Receptacle **Cable Connector Plug**

Stainless Steel or Titanium shells, Marine Bronze coupling nuts

Available in nine sizes from 2 to 128 contacts, Series 701 connectors feature stainless steel or marine bronze shells. Nitrile O-rings resist high temperature and corrosive chemicals.

5,000 PSI

These connectors withstand up to 5,000 PSI hydrostatic pressure in a mated condition.

Series 701-011 Cable Connector Plug (CCP) supplied as overmolded cables only

Series 701-016 Flange Connector Receptacle (FCR) supplied as discrete connectors or in pigtail assemblies

Series 701-017 Bulkhead Connector Receptacle (BCR) supplied as discrete connectors or in pigtail assemblies

SEAKING™ JUNIOR CONTACT SPECIFICATIONS, MATERIALS AND FINISHES, AND CRIMP TOOLS

Service Ratings

Service Rating	Sea Level DWV (VAC)	Operational	
		VAC	VDC
M	1300	433.3	612.8
N	1000	333.3	471.4
I	1800	600.0	484.5
II	2300	766.7	1084.2

Current Rating

Contact Size	Amps	Wire Size
#8	46.0	8 AWG
#10	33.0	10 AWG
#12	23.0	12-14 AWG
#16	13.0	16-20 AWG
#20	7.5	20-24 AWG
#22D	5.0	22-28 AWG

Performance Specifications

Insulation Resistance	5000 megohms at 500 VDC
Operating Temperature	-65° C to +175° C
Hydrostatic Pressure	5,000 PSI mated condition, tested per ISO 13628-6
Durability	300 mating cycles

Series 701 Polarization

Plug | Receptacle

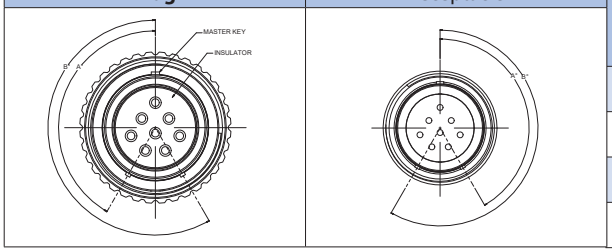

Key Position	Key Rotation A°	Key Rotation B°
Normal (N)	150°	210°
A	75°	210°
B	95°	230°
C	140°	275°

Material and Finish

Shells, Jam Nuts	Stainless steel or Titanium
CCP Coupling Nuts	Marine bronze, unplated
Contacts	Copper alloy, gold plated.
Insulators	Composite thermoplastic
Retaining ring and hardware	Stainless steel
Interfacial Seal (pin inserts only) and Grommet	Fluorosilicone
O-rings and Seals	Nitrile, 90 shore Viton®, 90 shore Viton® O-rings offer wider temperature range

Contact Crimp Tools

Contact Size	Crimp Tool	Positioner
#12	809-136	809-137
#16	809-136	809-137
#20	809-136	809-137
#22D	809-015	K42 Pin
		K40 Skt

 © 2022 Glenair, Inc • 1211 Air Way, Glendale, CA 91201 • 818-247-6000 • www.glenair.com • U.S. CAGE code 06324 • Underwater Interconnect Technologies

Rev 04.13.23

SEAKING™ JUNIOR POINT-TO-POINT PLUG-TO-PLUG OVERMOLDED CABLE

SeaKing Junior - How To Order CCP Cable Assemblies						
Sample Part Number	**7071-0067**	**9-35**	**Z1**	**S**	**N**	**36**
Series	**7071-0067** = SeaKing Junior Cable Assembly					
Insert Arrangement	See insert arrangement tables pages 23–28					
Material / Finish	**Z1** = Stainless Steel Body and Marine Bronze Coupling Nut **TC** = Titanium					
Contact Style	**S** = Socket					
Polarization	**N** = Normal, **A**, **B**, **C** (see Polarization Table, page 22)					
Cable Length	**Length** = in inches; ie 36 = 36 inches					

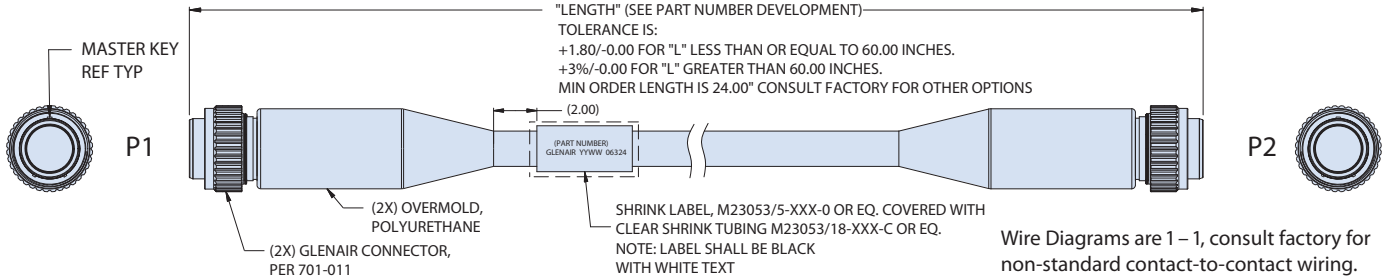

Wire Diagrams are 1 – 1, consult factory for non-standard contact-to-contact wiring.

SEAKING™ JUNIOR SINGLE-ENDED RECEPTACLE ASSEMBLY

SeaKing Junior - How To Order FCR and BCR Receptacle Assemblies							
Sample Part Number	**7071-0068**	**1**	**9-35**	**Z1**	**P**	**N**	**36**
Series	**7071-0068** = SeaKing Junior Cable Assembly						
Receptacle Style	**1** = Flange Connector Receptacle (701-016) **2** = Bulkhead Connector Receptacle (701-017)						
Insert Arrangement	See insert arrangement tables pages 23–28						
Material / Finish	**Z1** = Stainless Steel Body and Marine Bronze Coupling Nut **TC** = Titanium						
Contact Style	**P** = Pin						
Polarization	**N** = Normal, **A**, **B**, **C** (see Polarization Table, page 22)						
Cable Length	**Length** = in inches; ie 36 = 36 inches						

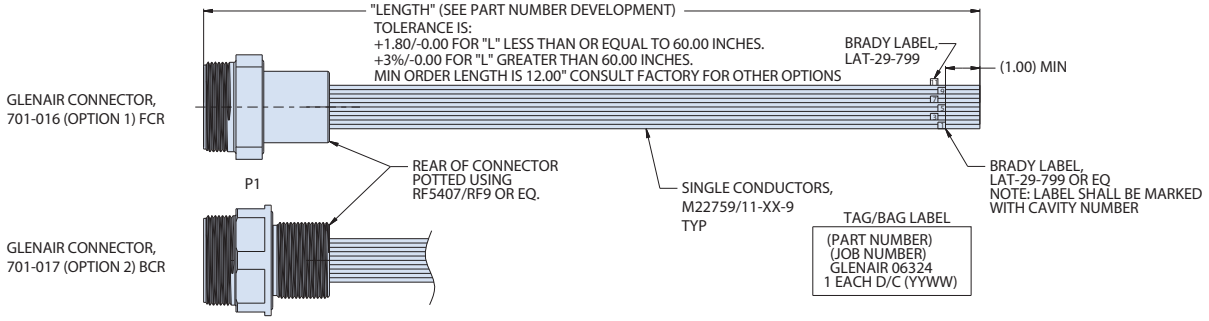

SERIES 701 SeaKing™ Junior

Dry-Mate Subsea Connectors

701-011 Plug, High Density with crimp removable contacts

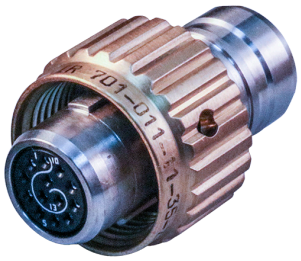

HOW TO ORDER					
Sample Part Number	**701-011**	**-13-08**	**-Z1**	**S**	**N**
Product Series	**701-011** = SeaKing Junior				
Shell Size-Contact Arrangement	See Contact Arrangements table				
Barrel Material	**Z1** = 316 Stainless Steel* (Marine Bronze Coupling Nut) **TC** = Titanium **XO** = PEEK**				
Contact Style	**A** = Pin Insert (No Contacts Included) **B** = Socket Insert (No Contacts Included) **P** = Pin **S** = Socket				
Key Position	**A**, **B**, **C**, **D**, **E** (See table)				

* 316 Stainless steel for sizes 09 through 19 2507 Super duplex for sizes 21 through 25
** Consult factory for pressure rating

NOTES

Pressure rating: Mated condition - 5,000 PSI

Materials tested to:
- Salt spray, per MIL-STD-202 method 101
- Humidity, per MIL-STD-202 method 101
- Thermal cycle, per EIA-455-71

Single O-ring sealing.

MATERIAL/FINISH

Plug barrel: See part number development

Coupling nut: Marine bronze for Z1 connectors
Titanium for TC connectors

Contacts: Copper alloy, gold plated

Insulator: High grade rigid dielectric

Retaining ring: 316 stainless steel

Interfacial seal (pin inserts only): Fluorosilicone

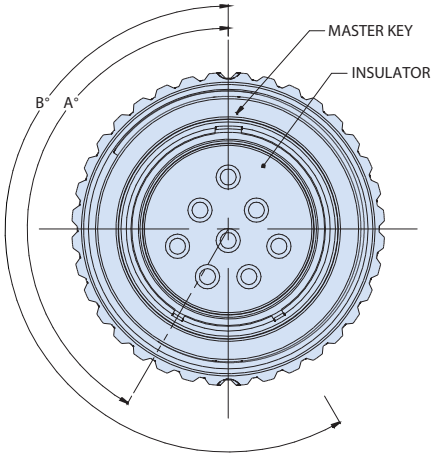

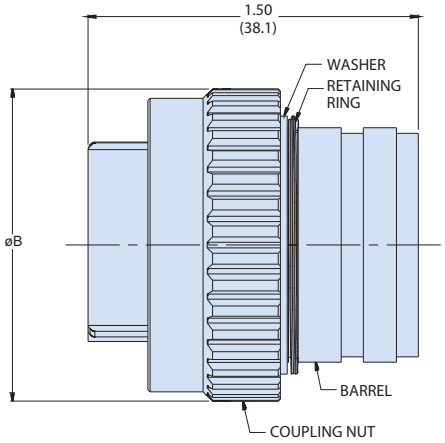

DIMENSIONS			
Shell Size	Thread A	Ø B Max	
		In.	mm
09	0.7500-20 UNEF-2B	0.935	23.7
11	0.8750-20 UNEF-2B	1.060	26.9
13	1.0000-20 UNEF-2B	1.185	30.1
15	1.1250-20 UN-2B	1.310	33.3
17	1.2500-20 UN-2B	1.435	36.4
19	1.3750-20 UN-2B	1.560	39.6
21	1.5000-20 UN-2B	1.685	42.8
23	1.6250-20 UN-2B	1.810	46.0
25	1.7500-20 UN-2B	1.935	49.1

ALTERNATE KEY POSITIONS		
Position	A°	B°
N	150°	210°
A	75°	210°
B	95°	230°
C	140°	275°
D	75°	275°
E	95°	210°

 © 2022 Glenair, Inc • 1211 Air Way, Glendale, CA 91201 • 818-247-6000 • www.glenair.com • U.S. CAGE code 06324 • Underwater Interconnect Technologies

Rev 04.13.23

SERIES 701 SeaKing™ Junior

Dry-Mate Subsea Connectors

701-017 Bulkhead Connector Receptacle, high density with crimp removable contacts

HOW TO ORDER					
Sample Part Number	**701-017**	**-17-08**	**-Z1**	**P**	**N**
Product Series	**701-017** = SeaKing Junior				
Shell Size-Contact Arrangement	See Contact Arrangements table				
Barrel Material	**Z1** = 316 Stainless Steel* **TC** = Titanium **XO** = PEEK**				
Contact Style	**A** = Pin Insert (No Contacts Included) **B** = Socket Insert (No Contacts Included) **P** = Pin **S** = Socket				
Key Position	**A**, **B**, **C**, **D**, **E** (See table)				

* 316 Stainless steel for sizes 09 through 15 2507 Super duplex for sizes 11 through 25
** Consult factory for pressure rating

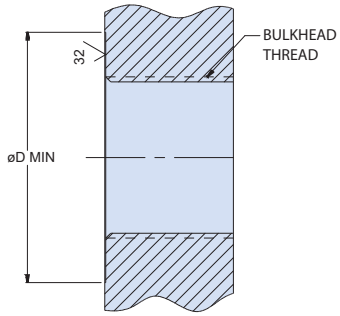

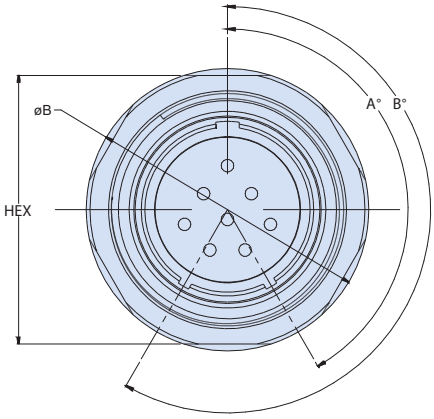

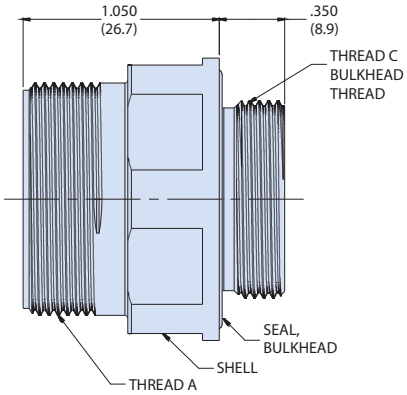

DIMENSIONS										
Shell Size	Thread A	B MAX		Hex		Thread C	D Min		Bulkhead Seal	Bore Seal
		inch	mm	inch	mm		inch	mm		
09	0.7500-20 UNEF-2A	1.025	26.0	15/16	23.8	0.5625-20 UN-2A	1.030	26.2	2-018	2-014
11	0.8750-20 UNEF-2A	1.150	29.2	1 1/16	27.0	0.6875-20 UN-2A	1.160	29.5	2-020	2-016
13	1.0000-20 UNEF-2A	1.275	32.4	1 3/16	30.2	0.8125-20 UNEF-2A	1.310	33.3	2-022	2-018
15	1.1250-20 UN-2A	1.410	35.8	1 5/16	33.3	0.9375-20 UNEF-2A	1.430	36.3	2-024	2-020
17	1.2500-20 UN-2A	1.525	38.7	1 7/16	36.5	1.0625-20 UN-2A	1.560	39.6	2-026	2-022
19	1.3750-20 UN-2A	1.650	41.9	1 9/16	39.7	1.1875-20 UN-2A	1.680	42.7	2-028	2-024
21	1.5000-20 UN-2A	1.775	45.1	1 11/16	42.9	1.3125-20 UN-2A	1.810	46.0	2-029	2-026
23	1.6250-20 UN-2A	1.900	48.3	1 13/16	46.0	1.4375-20 UN-2A	1.950	49.5	2-030	2-028
25	1.7500-20 UN-2A	2.025	51.4	1 15/16	49.2	1.5625-20 UN-2A	2.070	52.6	2-031	2-029

NOTES

Pressure rating: Mated condition - 5,000 PSI
Materials tested to:
- Salt spray, per MIL-STD-202 method 101
- Humidity, per MIL-STD-202 method 101
- Thermal cycle, per EIA-455-71

Single O-ring sealing.

MATERIAL/FINISH

Receptacle shell: See part number development
Contacts: Copper alloy, gold plated
Insulator: High grade rigid dielectric
Interfacial seal (pin inserts only) & grommet: Fluorosilicone
Seals: Nitrile

ALTERNATE KEY POSITIONS		
Position	A°	B°
N	150°	210°
A	75°	210°
B	95°	230°
C	140°	275°
D	75°	275°
E	95°	210°

SERIES 701 SeaKing™ Junior

Dry-Mate Subsea Connectors

701-016 Flange Connector Receptacle, high density with crimp removable contacts

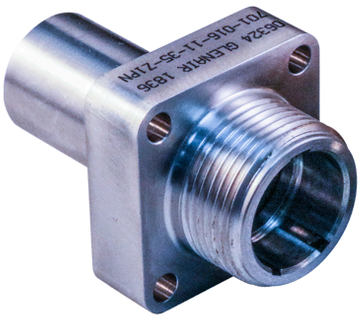

HOW TO ORDER					
Sample Part Number	**701-016**	**-17-08**	**-Z1**	**P**	**N**
Product Series	**701-016** = SeaKing Junior				
Shell Size-Contact Arrangement	See Contact Arrangements table				
Barrel Material	**Z1** = 316 Stainless Steel* **TC** = Titanium **XO** = PEEK**				
Contact Style	**A** = Pin Insert (No Contacts Included) **B** = Socket Insert (No Contacts Included) **P** = Pin **S** = Socket				
Key Position	**A**, **B**, **C**, **D**, **E** (See table)				

* 316 Stainless steel for sizes 09 2507 Super duplex for sizes 11 through 25
** Consult factory for pressure rating

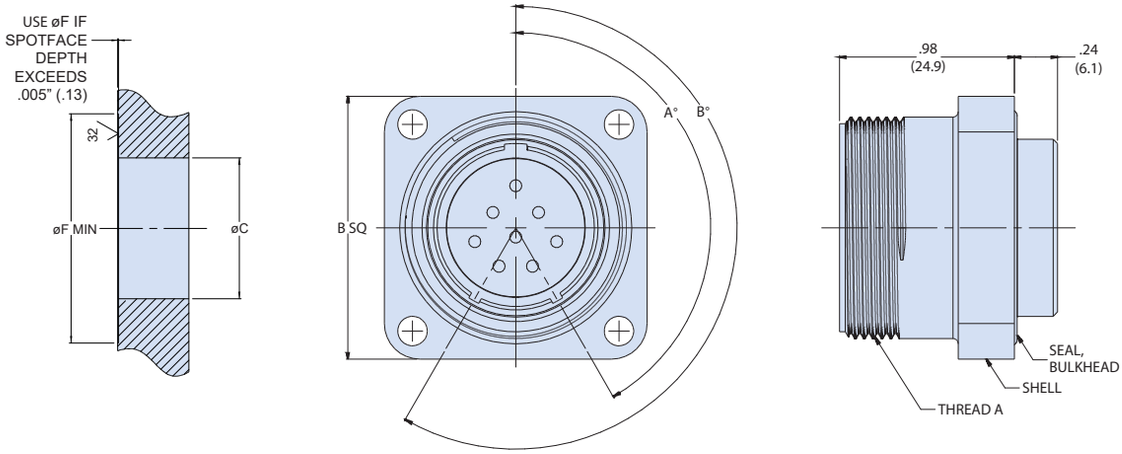

DIMENSIONS														
Shell Size	Thread A	B MAX		C*		D*		E* Flange Screw Size	F Min, .005		F' Min, >.005		Bulkhead Seal	Bore Seal
		inch	mm	inch	mm	inch	mm		inch	mm	inch	mm		
09	0.7500-20 UNEF-2A	1.085	27.6	0.530	13.5	0.770	19.6	#4-40	0.885	22.5	1.460	37.1	2-017	2-014
11	0.8750-20 UNEF-2A	1.175	29.8	0.655	16.6	0.860	21.8	#4-40	1.015	25.8	1.600	40.6	2-019	2-016
13	1.0000-20 UNEF-2A	1.265	32.1	0.760	19.3	0.950	24.1	#4-40	1.120	28.4	1.690	42.9	2-021	2-018
15	1.1250-20 UN-2A	1.405	35.7	0.895	22.7	1.070	27.2	#6-32	1.250	31.8	1.955	49.7	2-023	2-020
17	1.2500-20 UN-2A	1.495	38.0	1.020	25.9	1.160	29.5	#6-32	1.375	34.9	2.065	52.5	2-025	2-022
19	1.3750-20 UN-2A	1.710	43.4	1.125	28.6	1.250	31.8	#8-32	1.480	37.6	2.320	58.9	2-026	2-024
21	1.5000-20 UN-2A	1.850	47.0	1.250	31.8	1.390	35.3	#8-32	1.610	40.9	2.485	63.1	2-028	2-026
23	1.6250-20 UN-2A	1.940	49.3	1.350	34.3	1.480	37.6	#8-32	1.705	43.3	2.520	64.0	2-029	2-028
25	1.7500-20 UN-2A	2.030	51.6	1.500	38.1	1.570	39.9	#8-32	1.855	47.1	2.745	69.7	2-030	2-029

*For dimension see next page.

NOTES

Pressure rating: Mated condition - 5,000 PSI
Materials tested to:
- Salt spray, per MIL-STD-202 method 101
- Humidity, per MIL-STD-202 method 101
- Thermal cycle, per EIA-455-71

Single O-ring sealing.

MATERIAL/FINISH

Receptacle shell: See part number development
Contacts: Copper alloy, gold plated
Insulator: High grade rigid dielectric
Interfacial seal (pin inserts only) & grommet: Fluorosilicone
Seals: Nitrile

 © 2022 Glenair, Inc • 1211 Air Way, Glendale, CA 91201 • 818-247-6000 • www.glenair.com • U.S. CAGE code 06324 • Underwater Interconnect Technologies

701-016 Flange Connector Receptacle, high density with crimp removable contacts

ALTERNATE KEY POSITIONS		
Position	A°	B°
N	150°	210°
A	75°	210°
B	95°	230°
C	140°	275°
D	75°	275°
E	95°	210°

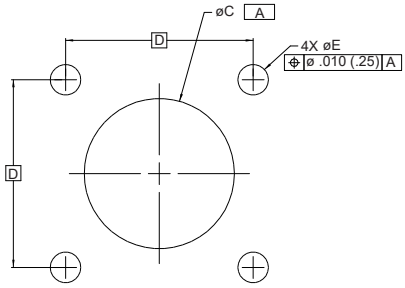

SERIES 701 SeaKing™ Junior

High-Density PEEK Subsea Connectors

701-038 PEEK Cable Connector Plug with crimp-removable contacts

HOW TO ORDER					
Sample Part Number	**701-038**	**-17-08**	**-K**	**S**	**N**
Product Series	**701-038** = SeaKing Junior				
Shell Size-Contact Arrangement	See Contact Arrangements table				
Barrel Material	**K** = 30% Reinforced PEEK				
Contact Style	**A** = Pin Insert (No Contacts Included) **B** = Socket Insert (No Contacts Included) **P** = Pin **S** = Socket				
Key Position	**A**, **B**, **C**, **D**, **E** (See table)				

NOTES

Pressure rating: Mated condition - 5,000 PSI, tested per ISO 13628-6.
Materials tested to:
- Salt spray, per MIL-STD-202 method 101
- Humidity, per MIL-STD-202 method 101
- Thermal cycle, per EIA-455-71

Single O-ring sealing.

MATERIAL/FINISH

Plug barrel: 30% reinforced PEEK
Coupling nut: 30% reinforced PEEK
Contacts: Copper alloy, gold plated
Insulator: High grade rigid dielectric
Retaining ring: 316 stainless steel
Interfacial seal (pin inserts only): Fluorosilicone

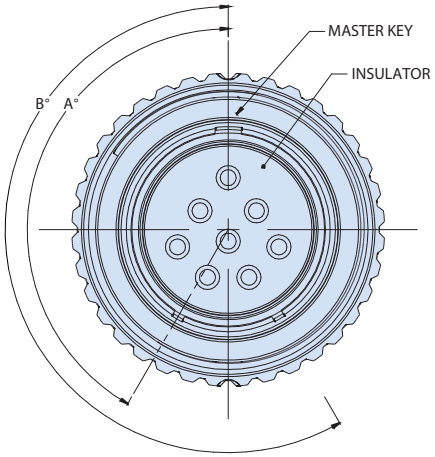

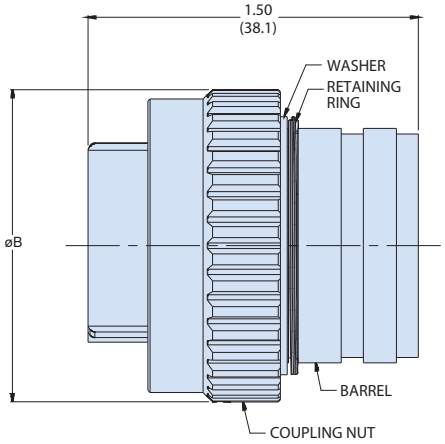

DIMENSIONS			
Shell Size	Thread A	Ø B	
		In.	mm
09	0.7500-20 UNEF-2B	0.935	23.7
11	0.8750-20 UNEF-2B	1.060	26.9
13	1.0000-20 UNEF-2B	1.185	30.1
15	1.1250-20 UN-2B	1.310	33.3
17	1.2500-20 UN-2B	1.435	36.4
19	1.3750-20 UN-2B	1.560	39.6
21	1.5000-20 UN-2B	1.685	42.8
23	1.6250-20 UN-2B	1.810	46.0
25	1.7500-20 UN-2B	1.935	49.1

ALTERNATE KEY POSITIONS		
Position	A°	B°
N	150°	210°
A	75°	210°
B	95°	230°
C	140°	275°
D	75°	275°
E	95°	210°

© 2022 Glenair, Inc • 1211 Air Way, Glendale, CA 91201 • 818-247-6000 • www.glenair.com • U.S. CAGE code 06324 • Underwater Interconnect Technologies
Rev 04.13.23

SERIES 701 SeaKing™ Junior

High-Density PEEK Subsea Connectors

701-040 PEEK Bulkhead Connector Receptacle with crimp removable contacts

SeaKing Plug - How To Order							
Sample Part Number	**701-040**	**-17-08**	**K**	**P**	**1**	**N**	
Product Series	**701-040** = SeaKing Junior						
Shell Size-Contact Arrangement	See Contact Arrangements table						
Barrel Material	**K** = 30% Reinforced PEEK						
Contact Style	**A** = Pin Insert (No Contacts Included) **B** = Socket Insert (No Contacts Included) **P** = Pin **S** = Socket						
O-Ring Material	**1** = 90 Shore Nitrile **2** = 90 Shore Vitron						
Key Position	**A**, **B**, **C**, **D**, **E** (See table)						

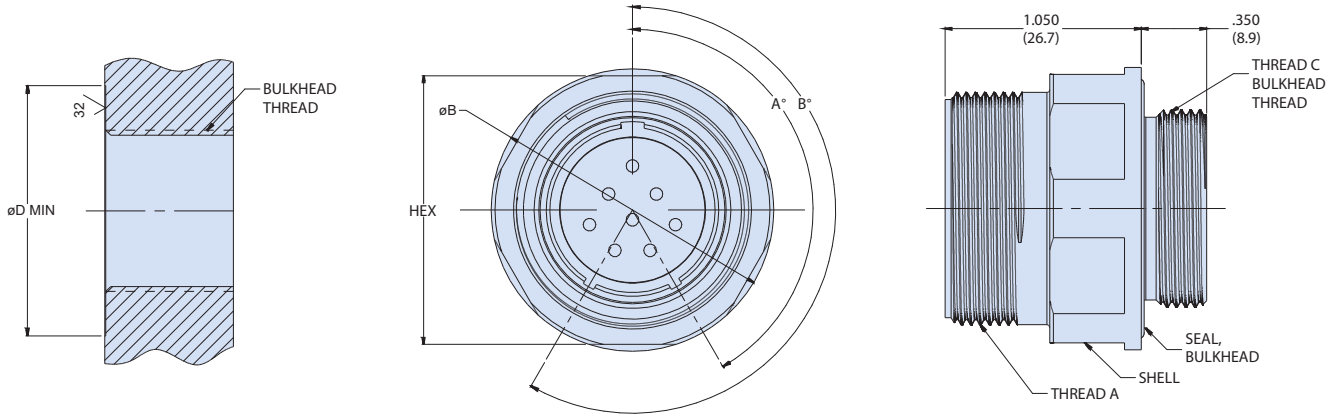

DIMENSIONS										
Shell Size	Thread A	B MAX		Hex		Thread C	D Min		Bulkhead Seal	Bore Seal
		inch	mm	inch	mm		inch	mm		
09	0.7500-20 UNEF-2A	1.025	26.0	15/16	23.8	0.5625-20 UN-2A	1.030	26.2	2-018	2-014
11	0.8750-20 UNEF-2A	1.150	29.2	1 1/16	27.0	0.6875-20 UN-2A	1.160	29.5	2-020	2-016
13	1.0000-20 UNEF-2A	1.275	32.4	1 3/16	30.2	0.8125-20 UNEF-2A	1.310	33.3	2-022	2-018
15	1.1250-20 UN-2A	1.410	35.8	1 5/16	33.3	0.9375-20 UNEF-2A	1.430	36.3	2-024	2-020
17	1.2500-20 UN-2A	1.525	38.7	1 7/16	36.5	1.0625-20 UN-2A	1.560	39.6	2-026	2-022
19	1.3750-20 UN-2A	1.650	41.9	1 9/16	39.7	1.1875-20 UN-2A	1.680	42.7	2-028	2-024
21	1.5000-20 UN-2A	1.775	45.1	1 11/16	42.9	1.3125-20 UN-2A	1.810	46.0	2-029	2-026
23	1.6250-20 UN-2A	1.900	48.3	1 13/16	46.0	1.4375-20 UN-2A	1.950	49.5	2-030	2-028
25	1.7500-20 UN-2A	2.025	51.4	1 15/16	49.2	1.5625-20 UN-2A	2.070	52.6	2-031	2-029

NOTES

Pressure rating: mated condition - 5,000 PSI, tested per ISO 13628-6.

Materials tested to:

- Salt spray, per MIL-STD-202 method 101
- Humidity, per MIL-STD-202 method 101
- Thermal cycle, per EIA-455-71

Single O-ring sealing.

MATERIAL/FINISH

Receptacle shell: 30% reinforced PEEK

Contacts: Copper alloy, gold plated

Insulator: High grade rigid dielectric

Interfacial seal (pin inserts only) & grommet: Fluorosilicone

ALTERNATE KEY POSITIONS		
Position	A°	B°
N	150°	210°
A	75°	210°
B	95°	230°
C	140°	275°
D	75°	275°
E	95°	210°

SERIES 701 SeaKing™ Junior

High-Density PEEK Subsea Connectors

701-039 PEEK Flange Connector Receptacle with crimp removable contacts

HOW TO ORDER						
Sample Part Number	**701-039**	**-17-08**	**-K**	**P**	**1**	**N**
Product Series	**701-039** = SeaKing Junior					
Shell Size-Contact Arrangement	See Contact Arrangements table					
Barrel Material	**K** = 30% Reinforced PEEK					
Contact Style	**A** = Pin Insert (No Contacts Included) **B** = Socket Insert (No Contacts Included) **P** = Pin **S** = Socket					
O-Ring Material	**1** = 90 Shore Nitrile **2** = 90 Shore Vitron					
Key Position	**A**, **B**, **C**, **D**, **E** (See table)					

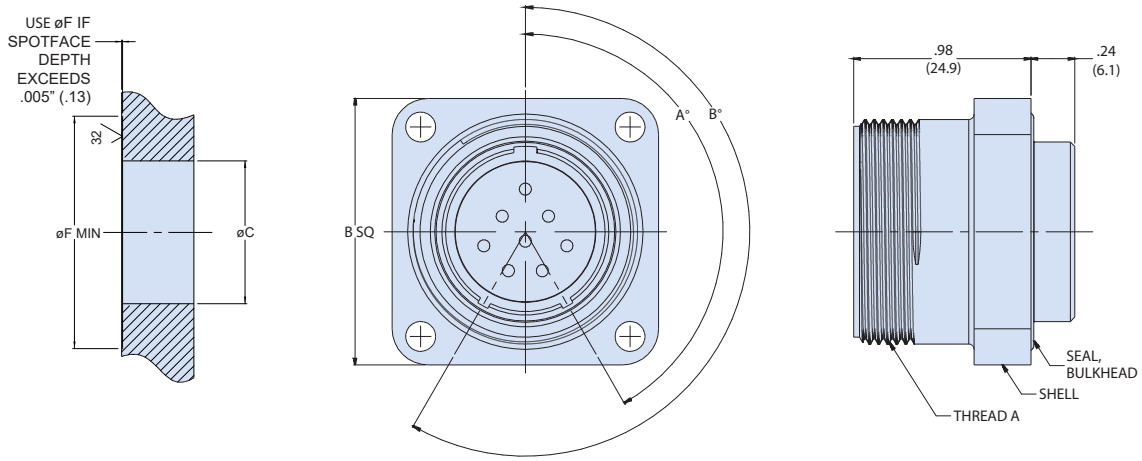

DIMENSIONS														
Shell Size	Thread A	B MAX		C*		D*		E* Flange Screw Size	F Min, .005		F Min, >.005		Bulkhead Seal	Bore Seal
		inch	mm	inch	mm	inch	mm		inch	mm	inch	mm		
09	0.7500-20 UNEF-2A	1.085	27.6	0.530	13.5	0.770	19.6	#4-40	0.885	22.5	1.460	37.1	2-017	2-014
11	0.8750-20 UNEF-2A	1.175	29.8	0.655	16.6	0.860	21.8	#4-40	1.015	25.8	1.600	40.6	2-019	2-016
13	1.0000-20 UNEF-2A	1.265	32.1	0.760	19.3	0.950	24.1	#4-40	1.120	28.4	1.690	42.9	2-021	2-018
15	1.1250-20 UN-2A	1.405	35.7	0.895	22.7	1.070	27.2	#6-32	1.250	31.8	1.955	49.7	2-023	2-020
17	1.2500-20 UN-2A	1.495	38.0	1.020	25.9	1.160	29.5	#6-32	1.375	34.9	2.065	52.5	2-025	2-022
19	1.3750-20 UN-2A	1.710	43.4	1.125	28.6	1.250	31.8	#8-32	1.480	37.6	2.320	58.9	2-026	2-024
21	1.5000-20 UN-2A	1.850	47.0	1.250	31.8	1.390	35.3	#8-32	1.610	40.9	2.485	63.1	2-028	2-026
23	1.6250-20 UN-2A	1.940	49.3	1.350	34.3	1.480	37.6	#8-32	1.705	43.3	2.520	64.0	2-029	2-028
25	1.7500-20 UN-2A	2.030	54.6	1.500	38.1	1.570	39.9	#8-32	1.855	47.1	2.745	69.7	2-030	2-029

*For dimension see next page.

NOTES

Pressure rating: Mated condition - 5,000 PSI, tested per ISO 13628-6.

Materials tested to:
- Salt spray, per MIL-STD-202 method 101
- Humidity, per MIL-STD-202 method 101
- Thermal cycle, per EIA-455-71

Single O-ring sealing.

MATERIAL/FINISH

Receptacle shell: 30% reinforced PEEK

Contacts: Copper alloy, gold plated

Insulator: High grade rigid dielectric

Interfacial seal (pin inserts only) & grommet: Fluorosilicone

 © 2022 Glenair, Inc • 1211 Air Way, Glendale, CA 91201 • 818-247-6000 • www.glenair.com • U.S. CAGE code 06324 • Underwater Interconnect Technologies

701-039 PEEK Flange Connector Receptacle with crimp removable contacts

ALTERNATE KEY POSITIONS		
Position	A°	B°
N	150°	210°
A	75°	210°
B	95°	230°
C	140°	275°
D	75°	275°
E	95°	210°

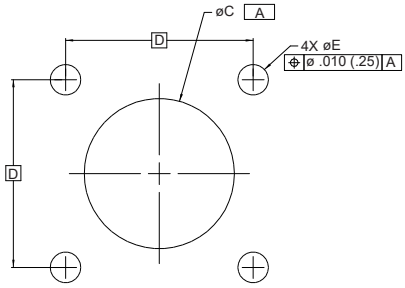

709-038 Pressure Cap Plug

HOW TO ORDER				
Sample Part Number	**709-038**	**-17**	**-Z1**	**L**
Product Series	**709-038** = SeaKing Junior			
Shell Size	Xxxxxxx			
Material/Finish	**Z1** = 316 Stainless Steel/Passivate* **TC** = Titanium			
Lanyard	Omit for None			

* 316 Stainless steel for sizes 09 through 15 2507 super duplex for sizes 17 through 25

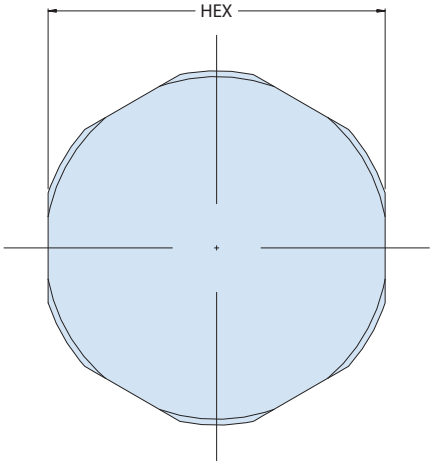

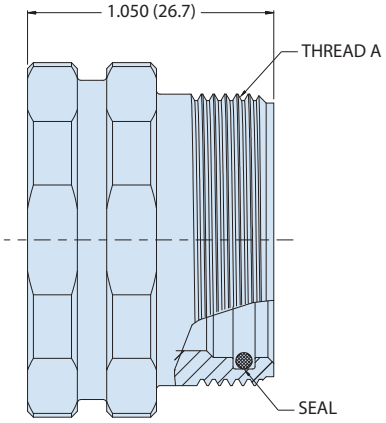

NOTES

Pressure rating: Mated condition - 5,000 PSI, tested per ISO 13628-6.

Materials tested to:

- Salt spray, per MIL-STD-202 method 101
- Humidity, per MIL-STD-202 method 101
- Thermal cycle, per EIA-455-71

Single O-ring sealing.

Mates to 701-011 series SeaKing junior plugs of same size and polarization

MATERIAL/FINISH

Receptacle shell: see How to Order Table

Seals: nitirle

DIMENSIONS				
		Hex		
Shell Size	**Thread A**	**inch**	**mm**	**Bore Seal**
09	0.7500-20 UN-2A	15/16	23.8	2-014
11	0.8750-20 UN-2A	1 1/16	27.0	2-016
13	1.0000-20 UNEF-2A	1 3/16	30.2	2-018
15	1.1250-20 UN-2A	1 5/16	33.3	2-020
17	1.2500-20 UN-2A	1 7/16	36.5	2-022
19	1.3750-20 UN-2A	1 9/16	39.7	2-024
21	1.5000-20 UN-2A	1 11/16	42.9	2-026
23	1.6250-20 UN-2A	1 13/16	46.0	2-028
25	1.7500-20 UN-2A	1 15/16	49.2	2-029

 © 2022 Glenair, Inc • 1211 Air Way, Glendale, CA 91201 • 818-247-6000 • www.glenair.com • U.S. CAGE code 06324 • Underwater Interconnect Technologies

709-039 Pressure Cap Receptacle

HOW TO ORDER					
Sample Part Number		**709-039**	**-15**	**-Z1**	**L**
Product Series	**709-039** = SeaKing Junior				
Shell Size	Xxxxxxx				
Material/Finish	**Z1** = Stainless Steel/Passivate* (Coupling Nut Is Marine Bronze) **TC** = Titanium (Coupling Nut Is Titanium)				
Lanyard	(3.5" Long) Omit for None				

* 316 Stainless steel for sizes 09 through 21 2507 super duplex for sizes 23 through 25

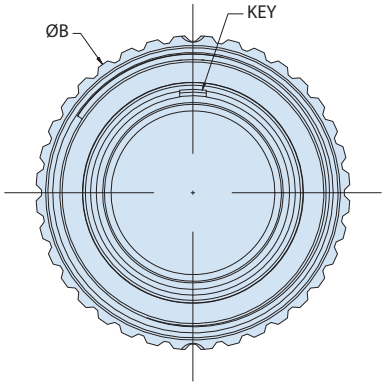

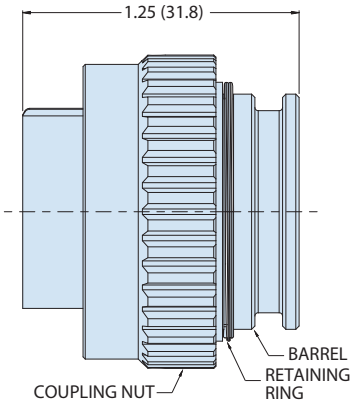

NOTES

Pressure rating: Mated condition - 5,000 PSI, tested per ISO 13628-6.

Materials tested to:

- Salt spray, per MIL-STD-202 method 101
- Humidity, per MIL-STD-202 method 101
- Thermal cycle, per EIA-455-71

Single O-ring sealing.

Mates to 701-011 series SeaKing junior plugs of same size and polarization

MATERIAL/FINISH

Barrel: see How to Order Table

Coupling nut: marine bronze for Z1 caps

Titanium for TC caps

Retaining ring: 316 stainless steel

DIMENSIONS			
		øB Max	
Shell Size	Thread A	inch	mm
09	0.7500-20 UN-2B	0.935	23.7
11	0.8750-20 UN-2B	1.060	26.9
13	1.0000-20 UNEF-2B	1.185	30.1
15	1.1250-20 UN-2B	1.310	33.3
17	1.2500-20 UN-2B	1.435	36.4
19	1.3750-20 UN-2B	1.560	39.6
21	1.5000-20 UN-2B	1.685	42.8
23	1.6250-20 UN-2A	1.810	46.0
25	1.7500-20 UN-2B	1.935	49.1

SEAKING™ JUNIOR TOOLED INSERT ARRANGEMENTS (STANDARD LAYOUTS)

Contact Legend
#22D • #16 ⊕
#20 ⊖ #12 ◒

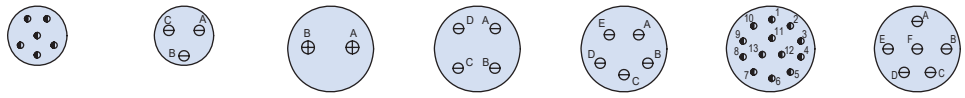

Insert Arrangement	9-35	9-98	11-2	11-4	11-5	11-35	11-98
No. of Contacts	6	3	2	4	5	13	6
Contact Size	#22D	#20	#16	#20	#20	#22D	#20
Service Rating	M	I	I	I	I	M	I

Contact Legend
#22D • #16 ⊕
#20 ⊖ #12 ◒

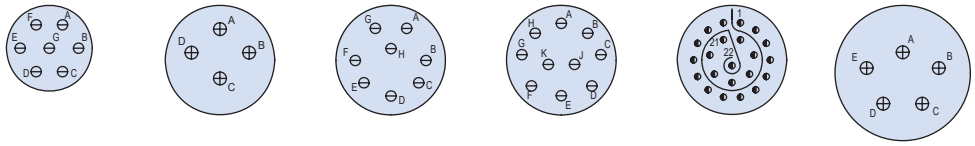

Insert Arrangement	11-99	13-4	13-8	13-98	13-35	15-5
No. of Contacts	7	4	8	10	22	5
Contact Size	#20	#16	#20	#20	#22D	#16
Service Rating	I	I	I	I	M	II

Contact Legend
#22D • #16 ⊕
#20 ⊖ #12 ◒

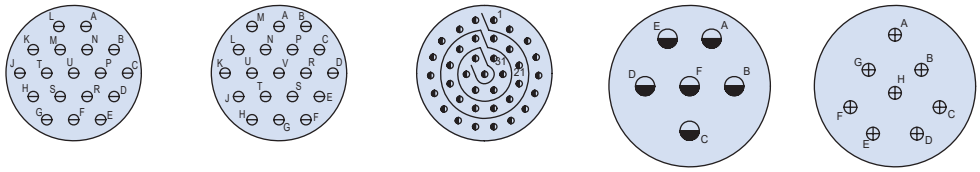

Insert Arrangement	15-18	15-19	15-35	17-6	17-8
No. of Contacts	18	19	37	6	8
Contact Size	#20	#20	#22D	#12	#16
Service Rating	I	I	M	I	II

Contact Legend
#22D • #16 ⊕
#20 ⊖ #12 ◒

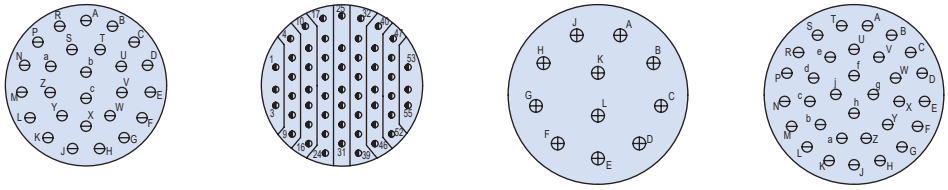

Insert Arrangement	17-26	17-35	19-11	19-32
No. of Contacts	26	55	11	32
Contact Size	#20	#22D	#16	#20
Service Rating	I	M	II	I

Contact Legend
#22D • #16 ⊕
#20 ⊖ #12 ◒

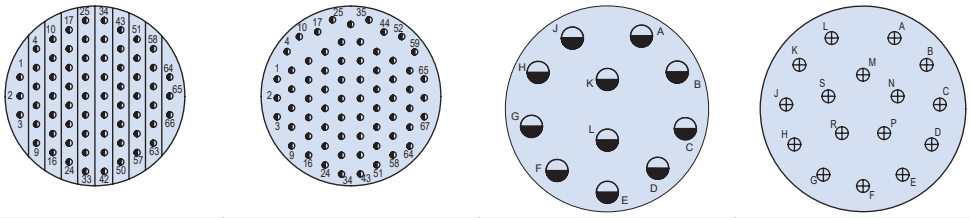

Insert Arrangement	19-35	19-45	21-11	21-16
No. of Contacts	66	67	11	16
Contact Size	#22D	#22D	#12	#16
Service Rating	M	M	I	II

SEAKING™ JUNIOR TOOLED INSERT ARRANGEMENTS (STANDARD LAYOUTS)

Contact Legend
#22D ⊕ #16 ⊕
#20 ⊖ #12 ◒

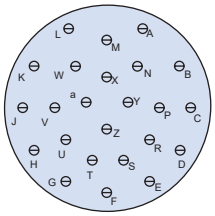
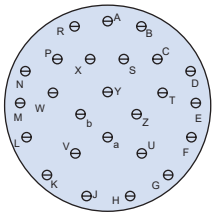
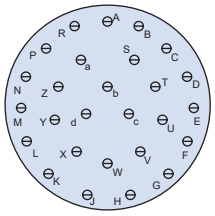
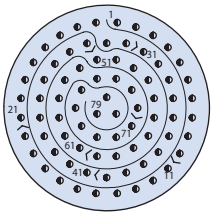

Insert Arrangement	21-24	21-25	21-27	21-35
No. of Contacts	24	25	27	79
Contact Size	#20	#20	#20	#22D
Service Rating	I	I	I	M

Contact Legend
#22D ⊕ #16 ⊕
#20 ⊖ #12 ◒

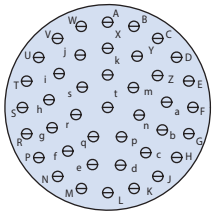
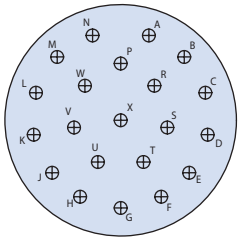
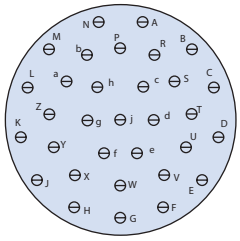
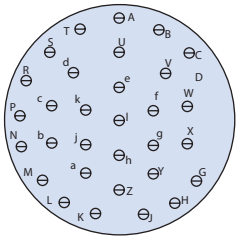

Insert Arrangement	21-41	23-21	23-32	23-34
No. of Contacts	41	21	32	34
Contact Size	#20	#16	#20	#20
Service Rating	I	II	I	I

Contact Legend
#22D ⊕ #16 ⊕
#20 ⊖ #12 ◒

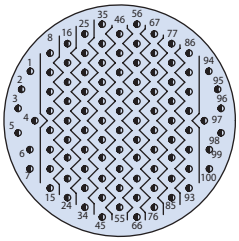
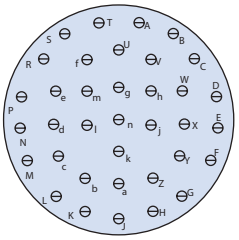
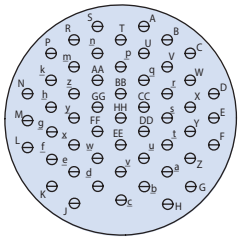
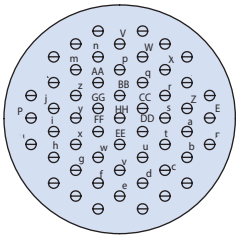

Insert Arrangement	23-35	23-36	23-53	23-55
No. of Contacts	100	36	53	55
Contact Size	#22D	#20	#20	#20
Service Rating	M	I	I	I

Contact Legend
#22D ⊕ #16 ⊕
#20 ⊖ #12 ◒

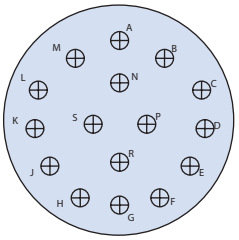
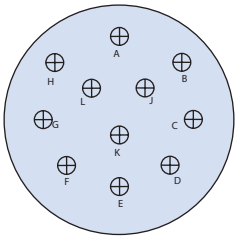
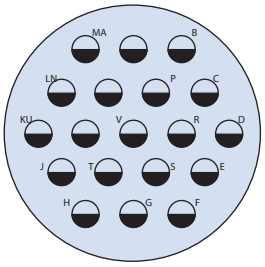

Insert Arrangement	23-97	23-99	25-19
No. of Contacts	16	11	19
Contact Size	#16	#16	#12
Service Rating	I	II	I

 © 2022 Glenair, Inc • 1211 Air Way, Glendale, CA 91201 • 818-247-6000 • www.glenair.com • U.S. CAGE code 06324 • Underwater Interconnect Technologies

SEAKING™ JUNIOR TOOLED INSERT ARRANGEMENTS (STANDARD LAYOUTS)

Contact Legend
#22D ⊙ #16 ⊕
#20 ⊖ #12 ◒

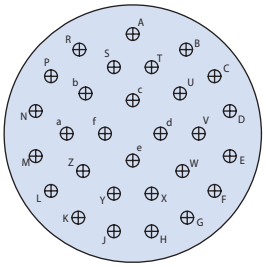

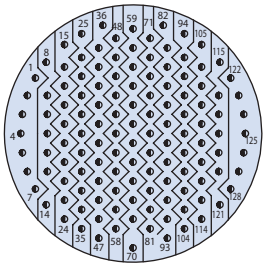

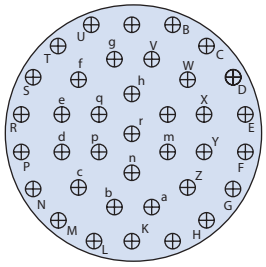

Insert Arrangement	25-29	25-35	25-37
No. of Contacts	29	128	37
Contact Size	#16	#22D	#16
Service Rating	I	M	II

Contact Legend
#22D ⊙ #16 ⊕
#20 ⊖ #12 ◒

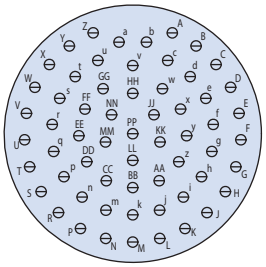

Insert Arrangement	25-61
No. of Contacts	61
Contact Size	#20
Service Rating	I

SEAKING™ JUNIOR TOOLED INSERT ARRANGEMENTS (HIGH-DENSITY LAYOUTS)

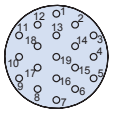

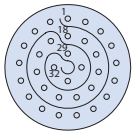

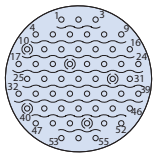

Insert Arrangement	9-23	11-23	13-23	15-23
No. of Contacts	9	19	32	55
Contact Size	#23	#23	#23	#23
Service Rating	N	N	N	N

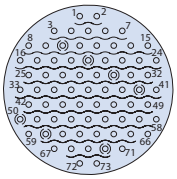

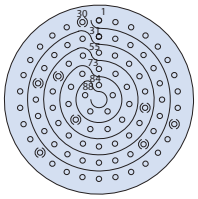

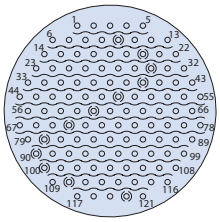

Insert Arrangement	17-23	19-23	21-23
No. of Contacts	73	88	121
Contact Size	#23	#23	#23
Service Rating	N	N	N

SEAKING™ JUNIOR TOOLED INSERT ARRANGEMENTS (HIGH-DENSITY LAYOUTS)

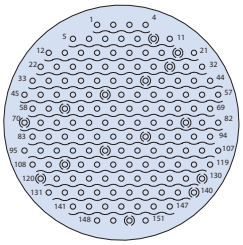

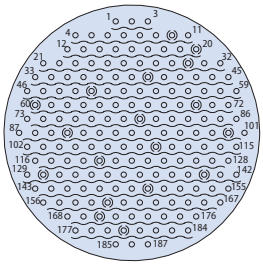

Insert Arrangement	23-23	25-23
No. of Contacts	151	187
Contact Size	#23	#23
Service Rating	N	N

SEAKING™ JUNIOR TOOLED INSERT ARRANGEMENTS (COMBO LAYOUTS)

Contact Legend
#22D • #20 ⊖ #16 ⊕
#12 ◒ #10 ◉

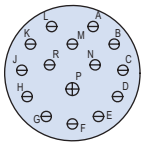

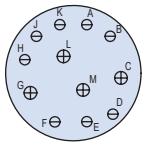

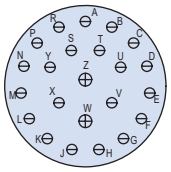

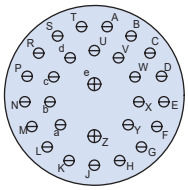

Insert Arrangement	15-15		15-97		17-99		19-28	
No. of Contacts and Size	1X #16	14X #20	4X #16	8X #20	2X #16	21X #20	2X #16	26X #20
Service Rating	I		I		I		I	

Contact Legend
#22D • #20 ⊖ #16 ⊕
#12 ◒ #10 ◉

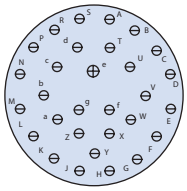

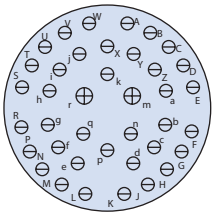

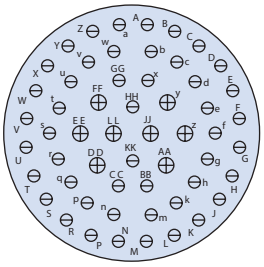

Insert Arrangement	19-30		21-39		25-4	
No. of Contacts and Size	1X #16	29X #20	2X #16	37X #20	8X #16	48X #20
Service Rating	I		I		I	

Contact Legend
#22D • #20 ⊖ #16 ⊕
#12 ◒ #10 ◉

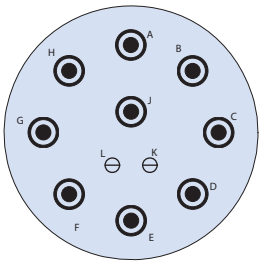

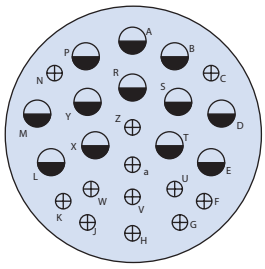

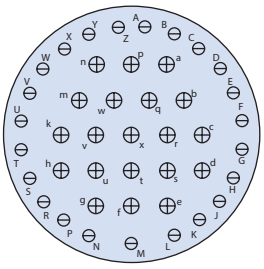

Insert Arrangement	25-11		25-24		25-43	
No. of Contacts and Size	9X #10	2x #20	12X #12	12X #16	20X #16	23X #20
Service Rating	N		I		I	

 © 2022 Glenair, Inc • 1211 Air Way, Glendale, CA 91201 • 818-247-6000 • www.glenair.com • U.S. CAGE code 06324 • Underwater Interconnect Technologies

SEAKING™ JUNIOR TOOLED INSERT ARRANGEMENTS (SPECIAL SHIELDED LAYOUTS)

Contact Legend
#22D ◐ #16 ⊕
#20 ⊖ #12 ◒
#8 ●

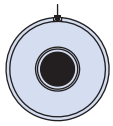

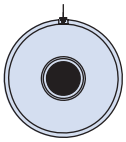

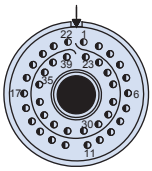

Shell Size - Insert Arrangement	9-1	11-1*	17-2	
No. of Contacts	1x #8	1x #8	1x #8	38x #22D

Contact Legend
#22D ◐ #16 ⊕
#20 ⊖ #12 ◒
#8 ●

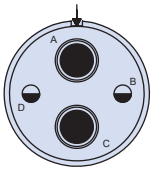

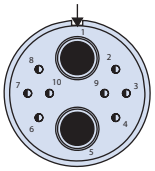

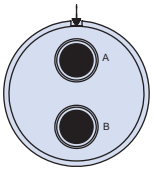

Shell Size - Insert Arrangement	17-22		17-60		17-75
No. of Contacts	2x #8	2x #12	2x #8	8x #22	2x #8

Contact Legend
#22D ◐ #16 ⊕
#20 ⊖ #12 ◒
#8 ●

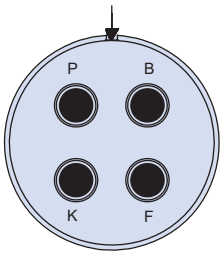

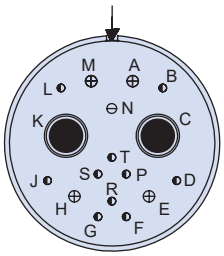

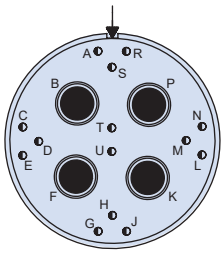

Shell Size - Insert Arrangement	19-4	19-17				19-18	
No. of Contacts	4x #8	2x #8	4x #16	1x #20	10x #22D	4x #8	14x #22D

Contact Legend
#22D ◐ #16 ⊕
#20 ⊖ #12 ◒
#8 ●

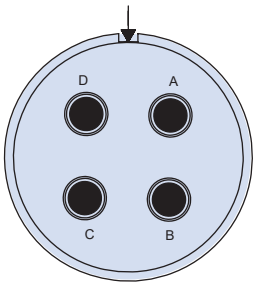

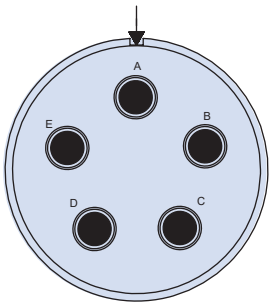

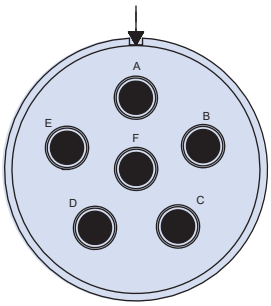

Shell Size - Insert Arrangement	21-75	23-5	23-6
No. of Contacts and Size	4x #8	5x #8	6x #8

SEAKING™ JUNIOR TOOLED INSERT ARRANGEMENTS (SPECIAL SHIELDED LAYOUTS)

Contact Legend
#22D #16
#20 #12
#8

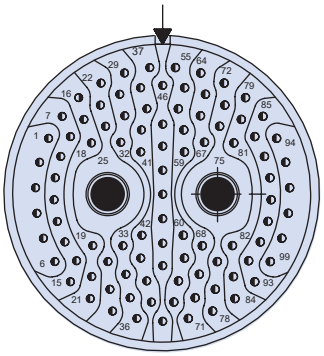

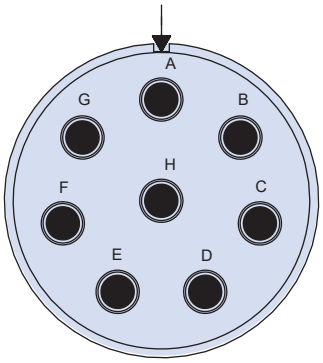

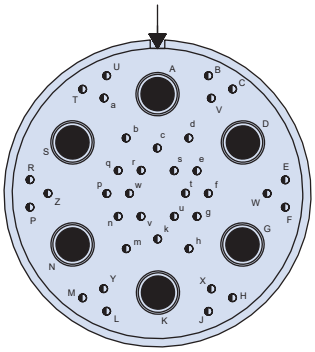

Shell Size - Insert Arrangement	25-7		25-8	25-17	
No. of Contacts and Size	2x #8	97x #22	8x #8	6x #8	36x #22

Contact Legend
#22D #16
#20 #12
#8

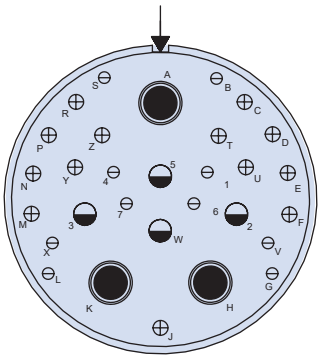

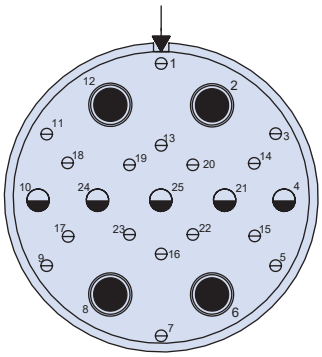

Shell Size - Insert Arrangement	25-20				25-26		
No. of Contacts and Size	3x #8	4x #12	13x #16	10x #20	4x #8	5x #12	16x #20

Contact Legend
#22D #16
#20 #12
#8

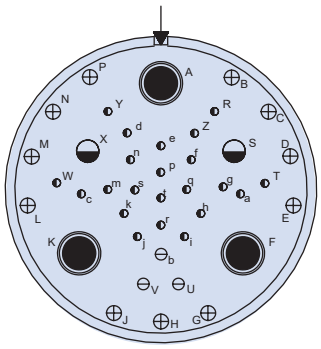

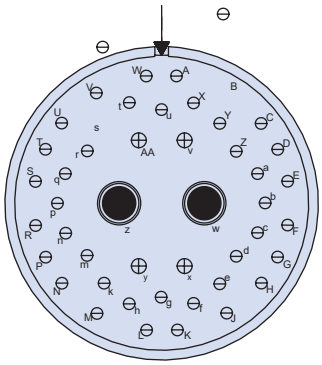

Shell Size - Insert Arrangement	25-41					25-46		
No. of Contacts and Size	3x #8	2x #12	11x #16	3x #20	22x #22D	2x #8	4x #16	40x #20

 © 2022 Glenair, Inc • 1211 Air Way, Glendale, CA 91201 • 818-247-6000 • www.glenair.com • U.S. CAGE code 06324 • Underwater Interconnect Technologies