MISSION-CRITICAL
INTERCONNECT
SOLUTIONS

Glenair®

"BETTER-THAN-QPL"

SuperNine D38999 Series I Type Connectors and Cables

High-Performance Bayonet-Lock Coupling
Environmental · Hermetic · High-Speed · EMI/EMP Filter

JULY 2025

OPTIMIZED FOR USE WITH

MIL-STAR™
HIGH-PERFORMANCE HOOKUP WIRE AND CABLE

SuperNine®

The Advanced-Performance MIL-DTL-38999 Series I Type Bayonet-Lock Connector

"Better-than-QPL" three-point high-vibration bayonet coupling

SuperNine® is a "Better-than-QPL" MIL-DTL-38999 signature series offering available only from Glenair. Series I scoop-proof bayonet-lock connectors deliver outstanding vibration and shock performance and fast mating / demating.

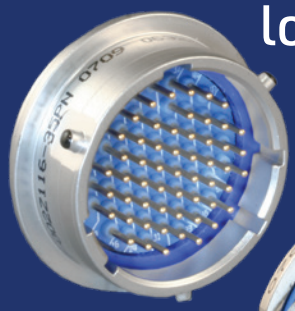

Also available: SuperNine Series II low-profile bayonet-lock connectors

- **Scoop-proof design prevents pin damage and short circuits**
- **Improved, positive-lock, 3-point stainless-steel pin bayonet coupling for outstanding shock and vibration resistance**
- **Fully tooled for all MIL-STD-1560 insert arrangements**
- **Contact options include size #22D, #20, #16, and #12 (see High-Speed series for Size #8)**
- **500 + mating cycles exceeds MIL-DTL-38999 specification**
- **Glenair signature Tin-Zinc finish is RoHS compliant and cadmium compatible**

© 2025 Glenair, Inc • 1211 Air Way, Glendale, CA 91201 • 818-247-6000 • www.glenair.com • U.S. CAGE code 06324

ADVANCED PERFORMANCE

SuperNine MIL-DTL-38999 Series I

Scoop-proof bayonet-lock connectors with "Better-than-QPL" performance

- **Integral banding porch eliminates need for add-on accessories**
- **Improved plug ground fingers deliver outstanding EMI performance**
- **Precision-machined key/keyway polarization for reliable mismating protection**
- **Expanded receptacle styles include Clinch-nut and Helicoil mounting, and In-line configurations**

ENVIRONMENTAL CRIMP-CONTACT AND PC-TAIL CONFIGURATIONS

Integrated banding porch

Sav-Con® connector savers and gender-changing adapters

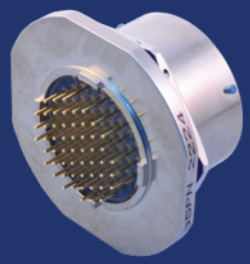

Dual-standoff, metric and standard-threaded, and washout standoff PC-tail receptacles

HIGH-SPEED ENVIRONMENTAL PLUGS AND RECEPTACLES

SpeedLine™ High-Speed Protocol Cables

Optimized for Glenair signature El Ochito octaxial high-speed contacts and SpeedLine high-speed protocol cable

WHITE

10GBASE-T

BLUE

USB 3.0

RED

HDMI, SATA, DisplayPort

GLASS-SEAL AND SIGNATURE CODE RED LIGHTWEIGHT HERMETIC CONNECTORS WITH <1 X 10-7 LEAK RATE PERFORMANCE

QPL qualified

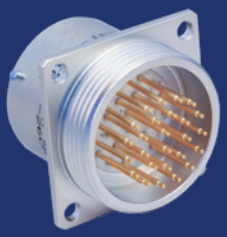

Wall-mount receptacle

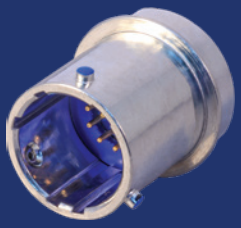

Solder-mount receptacle

Jam-nut receptacle

Lightweight CODE-RED hermetic seal connectors

EMI/EMP FILTER CONNECTORS

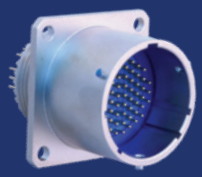

Wall-mount receptacle with PC tail or solder-cup contacts

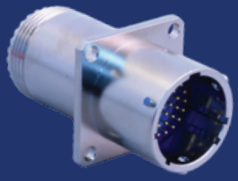

Wall-mount receptacle with crimp contacts

Jam-nut receptacles—crimp, solder, or PC-tail contacts

Filter Sav-Con® connector adapters

© 2025 Glenair, Inc • 1211 Air Way, Glendale, CA 91201 • 818-247-6000 • www.glenair.com • U.S. CAGE code 06324

MIL-DTL-38999 Series I Type
Quick selection guide

ENVIRONMENTAL CONNECTORS

QUICK SELECTION GUIDE		
Part Number	**Description**	**Page**
	Class G and NASA space-grade guidelines	A-5
231-206	Plug and receptacle connectors with integral banding porch	A-6
231-207	Wall-mount receptacles, flush flange	A-12
231-207-07	Jam-nut mount receptacle, flush flange	A-16
231-208	Wall-mount receptacle, stepped contacts	A-18
231-208-07	Jam-nut mount receptacle, stepped contacts	A-21
231-209	Wall-mount receptacle, washout standoffs	A-23
231-209-07	Jam-nut mount receptacle with standoffs	A-26
231-210	Wall-mount receptacle with standoffs	A-28
231-210-07	Jam-nut mount receptacle with standoffs	A-31
231-211	Dual-flange wall-mount receptacle	A-33
231-211-07	Jam-nut mount dual flange receptacle	A-37
231-212	Wall-mount feedthru receptacle connector	A-39
231-213	Sav-Con® connector saver, plug-to-receptacle interface	A-42
231-214	Sav-Con® connector saver, plug-to-plug interface	A-43
250-101	Shorting connectors, plug and receptacle	A-44

231-206

231-207-07

231-209-07

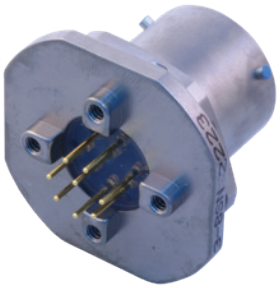

231-210-07

231-211-07

231-213

© 2025 Glenair, Inc • 1211 Air Way, Glendale, CA 91201 • 818-247-6000 • www.glenair.com • U.S. CAGE code 06324 •
SuperNine MIL-DTL-38999 Series I Type · Dimensions in Inches (millimeters) are subject to change without notice.

MIL-DTL-38999 Series I Type
Class G and NASA space-grade guidelines

NASA and Class G Screening

The MIL-DTL-38999 specification defines TML and CVCM values for Class G space flight. Glenair modification code 186T assures parts are outgassed to meet the Class G requirements for outgassing. Additionally, NASA recommends that connectors for space flight be specially screened. NASA EEE-INST-002 instructions for EEE parts selection, screening, qualification, and derating contains three levels of screening for space-grade components. These outgassing and screening modification codes are listed at right. To add a modification code append code to end of part number: *231-206-G6NF17-8PN-**429C***.

- **"Mission critical" connectors for space flight should undergo rigorous 100% final inspection**
- **Modification codes are available to invoke special screening for both MIL-DTL-38999 and NASA applications**
- **Outgassing properties of materials used in Glenair SuperNine® connectors are detailed in the table below**

SCREENING LEVEL AND AVAILABLE OUTGASSING MODIFICATION CODES

Screening Level	Screening Only	48 Hour Oven Bake 175° C	Thermal Vacuum Outgassing (10^{-6} Torr)	
			24 Hour 125° C	48 Hour 175° C
NASA, Level 1 Highest Reliability	429B	429J	429C	
NASA, Level 2 High Reliability	429	429K	429A	429AA
NASA, Level 3 Standard Reliability	Use Standard Part Number		429L	
38999, Class G or H (Group A and B inspection, no screening)				186T

TABLE II: NASA EEE-INST-02, TABLE 2A SCREENING LEVELS

Inspection	Level 1	Level 2	Level 3
Visual	100%	100%	100%
Mechanical	2(0)	2(0)	
Dielectric Withstanding Voltage	2(0)	2(0)	
Insulation Resistance	2(0)	2(0)	
Contact Engagement & Separation Force	2(0)		
Hermeticity (Sealed Receptacles Only)	100%	100%	
Coupling Force	2(0)		

Required inspection quantity shown. Number in parenthesis indicates acceptance of failures allowed for all quantities inspected.

OUTGASSING PROPERTIES OF MATERIALS USED IN MIL-DTL-38999 TYPE SUPERNINE® CONNECTORS

Component	Material	TML %	CVCM %	Test Reference
Front and Rear Insulator	Epiall 1908	0.84	0.0	NASA Test # GSC15435 (48 hours at 180°C)
Rear Grommet, Interfacial Seal, Peripheral Seal, and Special Auxiliary Seals	Blended fluorosilicone/silicone elastomer	0.04	0.0	Glenair test
Front-To-Rear Insulator Bonding Material	Eccobond 104 A/B	0.52	0.08	Emerson & Cuming Data Sheet
Insulator-to-Rubber Bonding Material	RTV, per MIL-A-46146	<1.0	<0.1	Glenair Test
White Epoxy Ink for Silk-screening	Markem 7224 White	0.49	0.03	NASA Test #GSC19899
Potting Compound	High-performance space-grade epoxy	<1.0	<0.1	Glenair Test

MIL-DTL-38999 TYPE SUPERNINE® CONNECTOR MATERIALS APPROVED FOR SPACE FLIGHT

Component	Material	Notes
Shells, Coupling Nuts, Jam-nuts	Aluminum alloy	Approved for Space Flight
Rigid Insulators	Glass reinforced thermoset plastic, Epiall 1908	Approved for Space Flight
Contact Retention Clip	Beryllium copper, heat-treated, unplated	Approved for Space Flight
Grommet, Peripheral Seal, Interfacial Seal, Special Auxiliary Seals, O-ring	Blended fluorosilicone/silicone elastomer	Requires outgassing processing
Pin/Socket Contact	Gold plated beryllium copper alloy	Approved for Space Flight
Socket Contact Hood	Stainless steel	Approved for Space Flight
Potting Compounds and Adhesives	RTV and epoxies	Requires outgassing processing

MIL-DTL-38999 Series I Type
231-206 Plug and receptacle connectors with integral banding porch

"BETTER THAN QPL" FEATURES AND BENEFITS

- Improved, positive-lock, 3-point stainless-steel pin bayonet coupling with outstanding vibration and shock resistance
- Integral banding porch eliminates need for add-on accessories
- Plug ground fingers for advanced EMC
- Glenair signature Tin Zinc finish is RoHS compliant and cadmium compatible
- Precision-machined key/keyway polarization for reliable mismating protection
- Expanded receptacle styles include Clinch-nut and Helicoil mounting, and In-Line configurations
- Scoop-proof design prevents pin damage and short circuits
- Fully tooled for all MIL-STD-1560 insert arrangements
- Contact options include size #22D, #20, #16, and #12 (see High-Speed series for Size #8)
- 500+ mating cycles exceeds MIL-DTL-38999 specification

POWER SPECIFICATIONS

- Max operating temperature is 200°C finish dependent
- Meets Mil-Spec service rating, insert dependent

HOW TO ORDER

Sample Part Number	231-206	-G6	NF	17	-8	P	N

Basic Part Number	**231-206**
Connector Style	(See Table II)
Material/Finish	**NF**, **MA**, **MT**, **ME**, **ZR**, **Z1**, **ZL**, **AB** (See Table I)
Connector Size	**9**, **11**, **13**, **15**, **17**, **19**, **21**, **23**, **25**
Insert Arrangement	PER MIL-STD-1560
Contact Style	(See Table II)
Alternate Polarization	**A**, **B**, **C**, **D**, **N** = Normal, **U** = Universal

TABLE I: MATERIAL/FINISH

Sym	Material	Finish
NF	Aluminum Alloy	Cad/O.D. Over Electroless Nickel
MA		Electroless Nickel, Matte
ME		Electroless Nickel
MN		Tri-Nickel Alloy
MT		Nickel-PTFE
TZ		Tin Zinc Over Electroless Nickel
ZR		Zinc Ni, Black (Tri-Valent CR)
Z1	Stainless Steel	Passivate
ZL		Electrodeposited Nickel
AB	Marine Bronze	None (Clean Only)

TABLE II: CONNECTOR STYLE

Sym	Description
G6	Plug, EMI Spring, (MS27467T)
07	Receptacle, Jam-nut (MS27468T)
D0	Receptacle, Wall-mount Front Panel, Standard Holes (MS27466T)
E0	Receptacle, Extended Wall-mount, Back Panel, Standard Holes (MS27656T)
CS	Receptacle, Wall-mount, Standard Clinch-nuts
CM	Receptacle, Wall-mount, Metric Clinch-nuts
HS	Receptacle, Wall-mount, Standard Helicoils
HM	Receptacle, Wall-mount, Metric Helicoils
05	Receptacle, In-Line

TABLE III - CONTACT STYLE

Sym	Description
P	Pin, Gold, 500 Cycles
S	Socket, Gold, 500 Cycles
A	Pin Insert, Less Pin Contacts
B	Socket Insert, Less Socket Contacts

© 2025 Glenair, Inc • 1211 Air Way, Glendale, CA 91201 • 818-247-6000 • www.glenair.com • U.S. CAGE code 06324 •
SuperNine MIL-DTL-38999 Series I Type · Dimensions in Inches (millimeters) are subject to change without notice.

MIL-DTL-38999 Series I Type
231-206 Plug and receptacle connectors with integral banding porch

CONTACT ARRANGEMENTS			
Shell Size	Contact Size	Number of Contacts	Insert Arrangement
9	22D	6	9-35
9	20	2	9-94
9	20	3	9-98
11	22D	13	11-35
11	20	4	11-4
11	20	5	11-5
11	20	6	11-98
11	20	7	11-99
11	16	2	11-2
13	22D	22	13-35
13	20	8	13-8
13	20	10	13-98
13	16	4	13-4
15	22D	37	15-35
15	20	18	15-18
15	20	19	15-19
15	16	5	15-5
17	22D	55	17-35
17	20	26	17-26
17	16	8	17-8
17	12	6	17-6
19	22D	66	19-35
19	22D	67	19-35

CONTACT ARRANGEMENTS			
Shell Size	Contact Size	Number of Contacts	Insert Arrangement
19	20	32	19-32
19	16	11	19-11
21	22D	79	21-35
21	20	24	21-24
21	20	25	21-25
21	20	27	21-27
21	20	41	21-41
21	16	16	21-16
21	12	11	21-11
23	22D	100	23-35
23	20	32	23-32
23	20	34	23-34
23	20	36	23-36
23	20	53	23-53
23	20	55	23-55
23	16	21	23-21
23	16	16	23-97
23	16	11	23-99
25	22D	128	25-35
25	20	61	25-61
25	16	29	25-29
25	16	37	25-37
25	12	19	25-19

See Appendix for PCB Footprints

NOTES

1. Material/finish:
   - Shell, barrel, coupling nut, Jam-nut - see Table I
   - Insulator - high-grade rigid dielectric
   - Seals, grommet - fluorosilicone blend
   - Contacts - copper alloy / gold
2. Glenair's 231-206 connectors are designed to mate with any QPL manufacturer's MIL-DTL-38999, Series I connectors having the same shell size, insert arrangement, and polarization.
3. Blue color band indicates rear release retention system.
4. Connector is supplied with loose contacts (including spares), insertion/removal tool, and sealing plugs where inidcated in Table III.
5. Consult factory for crimp tools and/or accessory selection.
6. Alternate polarization 'U' (universal) is a non-standard Mil-Spec option which allows for mating to any QPL manufacturer's MIL-DTL-38999, Series I connector having the same shell size, insert arrangement, and mating contact size. Universal connectors are intended for use in testing facilities only and should be highly evaluated before consideration in another environment.

MIL-DTL-38999 Series I Type
231-206 Plug and receptacle connectors with integral banding porch

TABLE IV - WALL-MOUNT

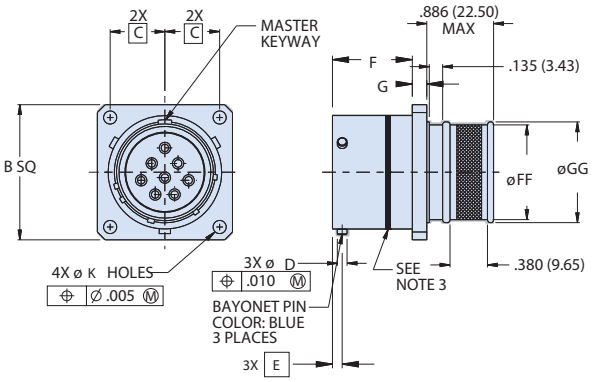

D0 - WALL MOUNT FRONT PANEL RECEPTACLE WITH STANDARD HOLES (MS27466T) (SEE TABLE IV)

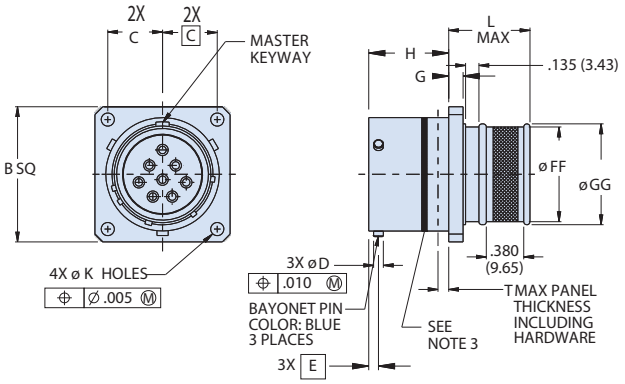

E0 - WALL MOUNT BACK PANEL RECEPTACLE WITH STANDARD HOLES (MS27656T) (SEE TABLE IV)

Shell Size Code	Shell Size	B SQ	C BSC	F	G	H	øK Holes	L MAX	øD	E BSC	T MAX	øFF	øGG
A	9	.958 (24.33) .918 (23.32)	.3595 (9.13)	.632 (16.05) .627 (15.93)	.100 (2.54) .085 (2.16)	.820 (20.83) .815 (20.70)	.138 (3.51) .123 (3.12)	.986 (25.04)	.084 (2.13) .076 (1.93)	.100 (2.54)	.234 (5.94)	.475 (12.07)	.538 (13.67)
B	11	1.051 (26.70) 1.011 (25.68)	.406 (10.31)									.600 (15.24)	.662 (16.81)
C	13	1.145 (29.08) 1.105 (28.07)	.453 (11.51)									.700 (17.78)	.762 (19.35)
D	15	1.239 (31.47) 1.199 (30.45)	.4845 (12.31)									.835 (21.21)	.898 (22.81)
E	17	1.332 (33.83) 1.292 (32.82)	.531 (13.49)									.960 (24.38)	1.022 (25.96)
F	19	1.458 (37.03) 1.418 (36.02)	.578 (14.68)									1.062 (26.97)	1.125 (28.58)
G	21	1.582 (40.18) 1.542 (39.17)	.625 (15.88)	.602 (15.29) .597 (15.16)	.130 (3.30) .115 (2.92)	.790 (20.07) .785 (19.94)		1.016 (25.81)			.204 (5.18)	1.188 (30.18)	1.250 (31.75)
H	23	1.708 (43.38) 1.668 (42.37)	.6875 (17.46)				.157 (3.99) .142 (3.61)					1.275 (32.39)	1.338 (33.99)
J	25	1.832 (46.53) 1.792 (45.52)	.750 (19.05)						.131 (3.33) .123 (3.12)	.109 (2.77)	.193 (4.90)	1.475 (37.47)	1.538 (39.07)

TABLE V - MOUNTING HOLES

Shell Size Code	Shell Size	øN MIN	øP MIN	øR HOLES	S BSC
A	9	.656 (16.66)	.516 (13.11)	.133 (3.38) .123 (3.12)	.719 (18.26)
B	11	.796 (20.22)	.625 (15.88)		.812 (20.62)
C	13	.922 (23.42)	.750 (19.05)		.906 (23.01)
D	15	1.047 (26.59)	.906 (23.01)		.969 (24.61)
E	17	1.219 (30.96)	1.016 (25.81)		1.062 (26.97)
F	19	1.297 (32.94)	1.141 (28.98)		1.156 (29.36)
G	21	1.422 (36.12)	1.266 (32.16)		1.250 (31.75)
H	23	1.547 (39.29)	1.375 (34.92)	.159 (4.04) .149 (3.78)	1.375 (34.92)
J	25	1.672 (42.47)	1.484 (37.69)	.155 (3.94) .145 (3.68)	1.500 (38.10)

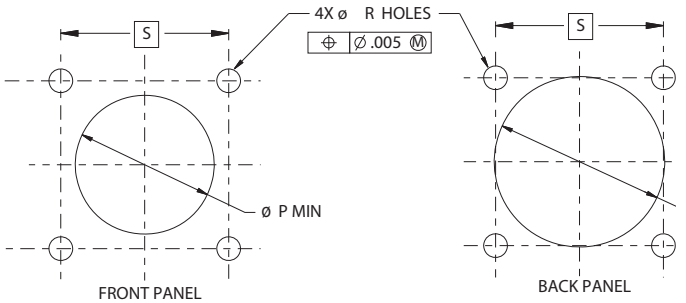

RECOMMENDED PANEL MOUNTING HOLES (SEE TABLE V)

© 2025 Glenair, Inc • 1211 Air Way, Glendale, CA 91201 • 818-247-6000 • www.glenair.com • U.S. CAGE code 06324 •
SuperNine MIL-DTL-38999 Series I Type · Dimensions in Inches (millimeters) are subject to change without notice.

MIL-DTL-38999 Series I Type
231-206 Plug and receptacle connectors with integral banding porch

TABLE VI - WALL-MOUNT, CLINCH-NUT AND HELICOIL

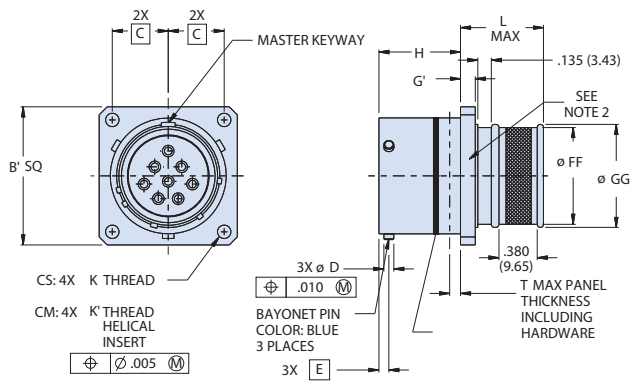

HS/HM - WALL MOUNT RECEPTACLE WITH STANDARD/METRIC HELICOILS

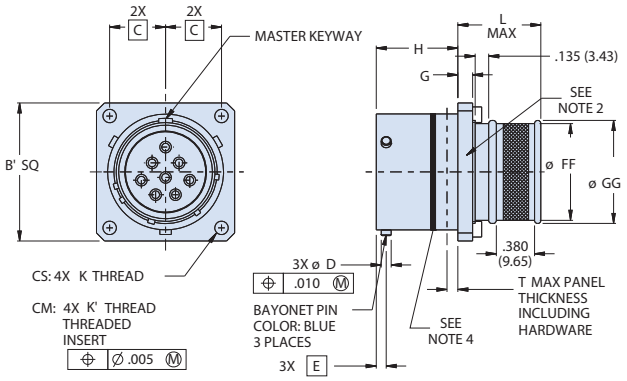

CS/CM - WALL MOUNT RECEPTACLE WITH STANDARD/METRIC CLINCH NUTS

Shell Size Code	Shell Size	B' SQ	C BSC	G	G'	H	K	K' Thread	L MAX	øD	E BSC	T MAX	øFF	øGG
A	9	1.094 (27.79) 1.054 (26.77)	.3595 (9.13)	.100 (2.54) .085 (2.16)	.179 (4.55) .140 (3.56)	.820 (20.83) .815 (20.70)	.112-40 UNC-3B	M3X0.5	.986 (25.04)	.084 (2.13) .076 (1.93)	.100 (2.54)	.234 (5.94)	.475 (12.07)	.538 (13.67)
B	11	1.187 (30.15) 1.147 (29.13)	.406 (10.31)										.600 (15.24)	.662 (16.81)
C	13	1.281 (32.54) 1.241 (31.52)	.453 (11.51)										.700 (17.78)	.762 (19.35)
D	15	1.344 (34.14) 1.304 (33.12)	.4845 (12.31)										.835 (21.21)	.898 (22.81)
E	17	1.437 (36.50) 1.397 (35.48)	.531 (13.49)										.960 (24.38)	1.022 (25.96)
F	19	1.531 (38.89) 1.491 (37.87)	.578 (14.68)										1.062 (26.97)	1.125 (28.58)
G	21	1.625 (41.28) 1.585 (40.26)	.625 (15.88)	.130 (3.30) .115 (2.92)	.190 (4.83) .170 (4.32)	.790 (20.07) .785 (19.94)			1.016 (25.81)			.204 (5.18)	1.188 (30.18)	1.250 (31.75)
H	23	1.750 (44.45) 1.710 (43.43)	.6875 (17.46)				.138-32 UNC-3B	M4X0.7					1.275 (32.39)	1.338 (33.99)
J	25	1.875 (47.63) 1.835 (46.61)	.750 (19.05)							.131 (3.33) .123 (3.12)	.109 (2.77)	.193 (4.90)	1.475 (37.47)	1.538 (39.07)

TABLE VII - MOUNTING HOLES

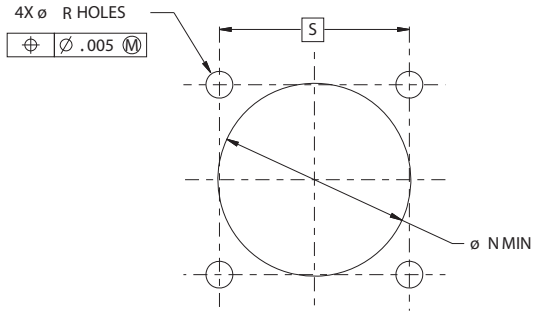

RECOMMENDED BACK PANEL MOUNTING HOLES

Shell Size Code	Shell Size	øN MIN	øR HOLES	S BSC
A	9	.656 (16.66)	.133 (3.38) .123 (3.12)	.719 (18.26)
B	11	.796 (20.22)		.812 (20.62)
C	13	.922 (23.42)		.906 (23.01)
D	15	1.047 (26.59)		.969 (24.61)
E	17	1.219 (30.96)		1.062 (26.97)
F	19	1.297 (32.94)		1.156 (29.36)
G	21	1.422 (36.12)		1.250 (31.75)
H	23	1.547 (39.29)	.159 (4.04) .149 (3.78)	1.375 (34.92)
J	25	1.672 (42.47)	.155 (3.94) .145 (3.68)	1.500 (38.10)

MIL-DTL-38999 Series I Type
231-206 Plug and receptacle connectors with integral banding porch

TABLE VIII - JAM-NUT MOUNT

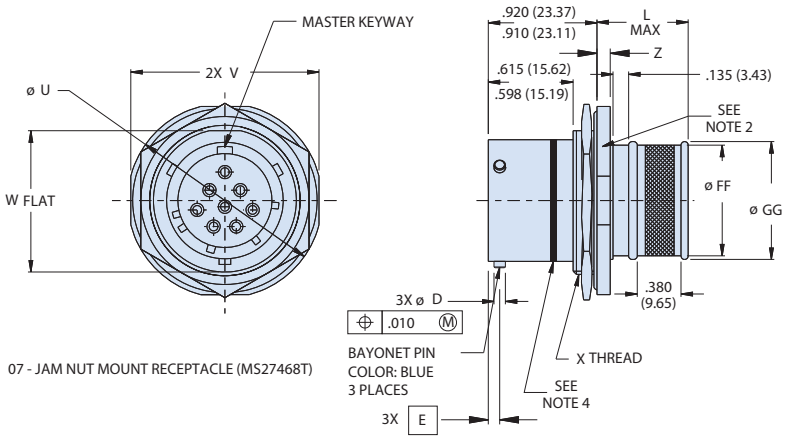

Shell Size Code	Shell Size	øU	V	W FLAT	X THREAD	Z	L MAX	øD	E BSC	øFF	øGG
A	9	1.204 (30.58) 1.172 (29.77)	1.078 (27.38) 1.046 (26.57)	.655 (16.64) .645 (16.38)	.6875-24 UNEF-2A	.120 (3.05) .099 (2.51)	1.006 (25.55)	.084 (2.13) .076 (1.93)	.100 (2.54)	.475 (12.07)	.538 (13.67)
B	11	1.391 (35.33) 1.359 (34.52)	1.266 (32.16) 1.234 (31.34)	.755 (19.18) .745 (18.92)	.8125-20 UNEF-2A					.600 (15.24)	.662 (16.81)
C	13	1.516 (38.51) 1.484 (37.69)	1.391 (35.33) 1.359 (34.52)	.942 (23.93) .932 (23.67)	1.000-20 UNEF-2A					.700 (17.78)	.762 (19.35)
D	15	1.641 (41.68) 1.609 (40.87)	1.516 (38.51) 1.484 (37.69)	1.066 (27.08) 1.056 (26.82)	1.1250-18 UNEF-2A					.835 (21.21)	.898 (22.81)
E	17	1.766 (44.86) 1.734 (44.04)	1.641 (41.68) 1.609 (40.87)	1.191 (30.25) 1.181 (30.00)	1.2500-18 UNEF-2A					.960 (24.38)	1.022 (25.96)
F	19	1.954 (49.63) 1.922 (48.82)	1.828 (46.43) 1.796 (45.62)	1.316 (33.43) 1.306 (33.17)	1.3750-18 UNEF-2A	.151 (3.84) .130 (3.30)	1.037 (26.34)			1.062 (26.97)	1.125 (28.58)
G	21	2.078 (52.78) 2.046 (51.97)	1.954 (49.63) 1.922 (48.82)	1.441 (36.60) 1.431 (36.35)	1.5000-18 UNEF-2A					1.188 (30.18)	1.250 (31.75)
H	23	2.204 (55.98) 2.172 (55.17)	2.078 (52.78) 2.046 (51.97)	1.566 (39.78) 1.556 (39.52)	1.6250-18 UNEF-2A					1.275 (32.39)	1.338 (33.99)
J	25	2.328 (59.13) 2.296 (58.32)	2.204 (55.98) 2.172 (55.17)	1.691 (42.95) 1.681 (42.70)	1.7500-18 UNEF-2A			.131 (3.33) .123 (3.12)	.109 (2.77)	1.475 (37.47)	1.538 (39.07)

TABLE IX - PANEL-MOUNT

Shell: Size: Code	Shell: Size	øAA	BB: FLAT
A	9	.703 (17.86): .693 (17.60)	.661 (16.79): .654 (16.61)
B	11	.835 (21.21): .825 (20.96)	.771 (19.58): .761 (19.33)
C	13	1.020 (25.91): 1.010 (25.65)	.955 (24.26): .945 (24.00)
D	15	1.145 (29.08): 1.135 (28.83)	1.085 (27.56): 1.075 (27.30)
E	17	1.270 (32.26): 1.260 (32.00)	1.210 (30.73): 1.200 (30.48)
F	19	1.395 (35.43): 1.385 (35.18)	1.335 (33.91): 1.325 (33.65)
G	21	1.520 (38.61): 1.510 (38.35)	1.460 (37.08): 1.450 (36.83)
H	23	1.645 (41.78): 1.635 (41.53)	1.585 (40.26): 1.575 (40.00)
J	25	1.770 (44.96): 1.760 (44.70)	1.710 (43.43): 1.700 (43.18)

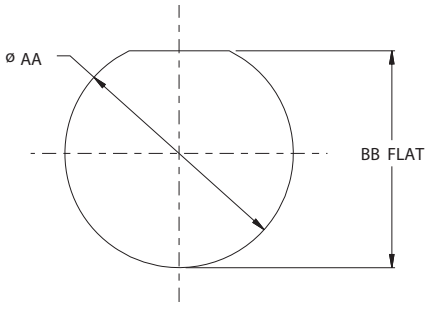

RECOMMENDED PANEL CUT OUT

© 2025 Glenair, Inc • 1211 Air Way, Glendale, CA 91201 • 818-247-6000 • www.glenair.com • U.S. CAGE code 06324 •
SuperNine MIL-DTL-38999 Series I Type · Dimensions in Inches (millimeters) are subject to change without notice.

MIL-DTL-38999 Series I Type
231-206 Plug and receptacle connectors with integral banding porch

TABLE X - IN-LINE

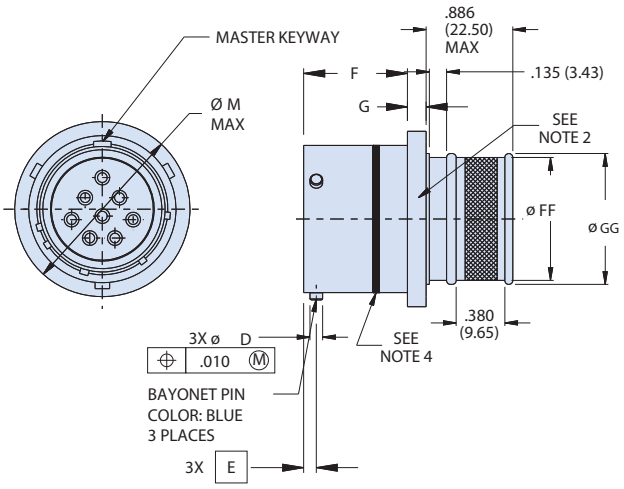

05 - IN-LINE RECEPTACLE

Shell Size Code	Shell Size	F	G	øD	E BSC	øM MAX	øFF	øGG
A	9	.632 (16.05) .627 (15.93)	.100 (2.54) .085 (2.16)	.084 (2.13) .076 (1.93)	.100 (2.54)	.859 (21.82)	.475 (12.07)	.538 (13.67)
B	11					.984 (24.99)	.600 (15.24)	.662 (16.81)
C	13					1.156 (29.36)	.700 (17.78)	.762 (19.35)
D	15					1.281 (32.54)	.835 (21.21)	.898 (22.81)
E	17					1.406 (35.71)	.960 (24.38)	1.022 (25.96)
F	19					1.516 (38.51)	1.062 (26.97)	1.125 (28.58)
G	21	.602 (15.29) .597 (15.16)	.130 (3.30) .115 (2.92)			1.641 (41.68)	1.188 (30.18)	1.250 (31.75)
H	23					1.766 (44.86)	1.275 (32.39)	1.338 (33.99)
J	25			.131 (3.33) .123 (3.12)	.109 (2.77)	1.891 (48.03)	1.475 (37.47)	1.538 (39.07)

TABLE XI - PLUG

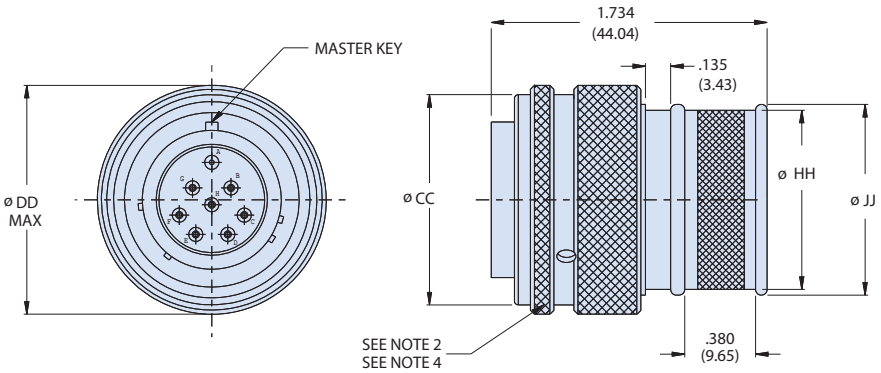

G6 - PLUG WITH EMI SPRING (MS27467T)

Shell Size Code	Shell Size	øCC	øDD MAX	øHH	øJJ
A	9	.791 (20.09); .780 (19.81)	.859 (21.82)	.410 (10.41)	.460 (11.68)
B	11	.916 (23.27): .905 (22.99)	.984 (24.99)	.525 (13.34)	.575 (14.60)
C	13	1.072 (27.23): 1.061 (26.95)	1.156 (29.36)	.650 (16.51)	.700 (17.78)
D	15	1.197 (30.40): 1.186 (30.12)	1.281 (32.54)	.775 (19.68)	.825 (20.96)
E	17	1.312 (33.32): 1.301 (33.05)	1.406 (35.71)	.900 (22.86)	.950 (24.13)
F	19	1.433 (36.40): 1.422 (36.12)	1.516 (38.51)	1.025 (26.03)	1.075 (27.30)
G	21	1.555 (39.50): 1.544 (39.22)	1.641 (41.68)	1.125 (28.58)	1.175 (29.85)
H	23	1.678 (42.62): 1.667 (42.34)	1.766 (44.86)	1.275 (32.39)	1.325 (33.65)
J	25	1.804 (45.82): 1.793 (45.54)	1.891 (48.03)	1.390 (35.31)	1.445 (36.70)

© 2025 Glenair, Inc • 1211 Air Way, Glendale, CA 91201 • 818-247-6000 • www.glenair.com • U.S. CAGE code 06324 •

MIL-DTL-38999 Series I Type
231-207 Wall-mount receptacles, flush flange

HOW TO ORDER							
Sample Part Number	**231-207**	**-CM**	**NF**	**23**	**-99**	**P**	**N**
Basic Part Number	**231-207**						
Connector Style	(See Table II)						
Material/Finish	**NF**, **MA**, **MT**, **ME**, **ZR**, **Z1**, **ZL**, **AB** (See Table I)						
Connector Size	**9**, **11**, **13**, **15**, **17**, **19**, **21**, **23**, **25**						
Insert Arrangement	PER MIL-STD-1560						
Contact Style	(See Table II)						
Alternate Polarization	**A**, **B**, **C**, **D**, **N** = Normal, **U** = Universal						

"BETTER THAN QPL" FEATURES AND BENEFITS

- Improved, positive-lock, 3-point stainless-steel pin bayonet coupling with outstanding vibration and shock resistance
- Plug ground fingers for advanced EMC
- Glenair Signature tin zinc finish class is RoHS compliant and cadmium compatible
- Precision-machined key/keyway polarization for reliable mismating protection
- Expanded receptacle styles include Clinch-nut and Helicoil mounting, and In-Line configurations
- Scoop-proof design prevents pin damage and short circuits
- Fully tooled for all MIL-STD-1560 insert arrangements
- Contact options include size #22D, #20, #16, and #12 (see High-Speed series for Size #8)
- 500+ mating cycles exceeds MIL-DTL-38999 specification

POWER SPECIFICATIONS

- Max operating temperature is 200°C finish dependent
- Meets Mil-Spec service rating, insert dependent

TABLE II - MOUNTING HOLES

Shell Size Code	Shell Size	ØN Min	ØR Holes	V Bsc
A	**9**	0.656 (16.66)	.133 (3.38) .123 (3.12)	0.719 (18.26)
B	**11**	0.796 (20.22)		0.812 (20.62)
C	**13**	0.922 (23.42)		0.906 (23.01)
D	**15**	1.047 (26.59)		0.969 (24.61)
E	**17**	1.219 (30.96)		1.062 (26.97)
F	**19**	1.297 (32.94)		1.156 (29.36)
G	**21**	1.422 (36.12)		1.250 (31.75)
H	**23**	1.547 (39.29)	.159 (4.04) .149 (3.78)	1.375 (34.93)
J	**25**	1.672 (42.47)	.155 (3.94) .145 (3.68)	1.500 (38.10)

TABLE V - MATERIAL/FINISH

Sym	Material	Finish
NF	Aluminum Alloy	Cad/O.D. Over Electroless Nickel
MA		Electroless Nickel, Matte
ME		Electroless Nickel
MN		Tri-Nickel Alloy
MT		Nickel-PTFE
TZ		Tin Zinc Over Electroless Nickel
ZR		Zinc Ni, Black (Tri-Valent CR)
Z1	Stainless Steel (SST)	Passivate
ZL		Electrodeposited Nickel
AB	Marine Bronze (MB)	None (Clean Only)

TABLE III

Contact Size	PC Tail ØM
No 23	.020 (0.51) .018 (0.46)
No 22	.020 (0.51) .018 (0.46)
No 20	.030 (0.76) .028 (0.71)
No 16	.040 (1.02) .038 (0.97)
No 12	.072 (1.83) .070 (1.78)

TABLE IV - CONNECTOR STYLE

SYM	Description
CM	Receptacle, Wall-mount With Metric Clinch-nuts
CS	Receptacle, Wall-mount With Standard Clinch-nuts
D0	Receptacle, Wall-mount With Thru Holes
HM	Receptacle, Wall-mount With Metric Helicoils
HS	Receptacle, Wall-mount With Standard Helicoils
T0	Receptacle, Wall-mount With Std Tapped Holes (MAT; SST & MB)
T1	Receptacle, Wall-mount With Mtc Tapped Holes (MAT; SST & MB)

© 2025 Glenair, Inc • 1211 Air Way, Glendale, CA 91201 • 818-247-6000 • www.glenair.com • U.S. CAGE code 06324 •
SuperNine MIL-DTL-38999 Series I Type · Dimensions in Inches (millimeters) are subject to change without notice.

MIL-DTL-38999 Series I Type
231-207 Wall-mount receptacles, flush flange

TABLE I - DIMENSIONS - CM WALL-MOUNT RECEPTACLE

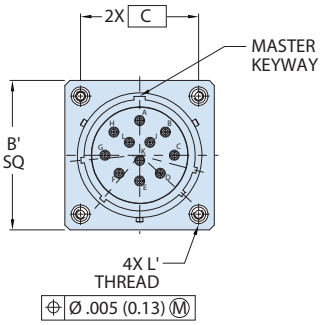

CM - WALL MOUNT RECEPTACLE
WITH METRIC CLINCH NUTS (SEE TABLE IV)

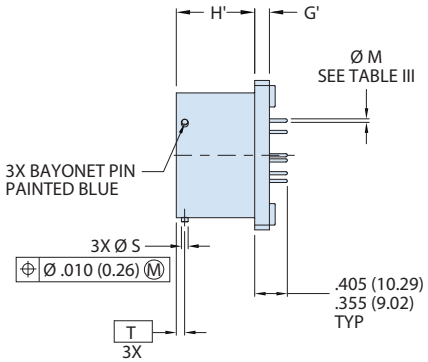

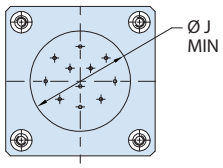

Shell Size Code	Shell Size	B Sq	B' Sq 8	C Bsc	G	G'	H	H'	ØJ Min	ØK	L Thread	L' Thread	ØS	T Bsc
A	9	0.948 (24.08) 0.925 (23.50)	1.043 (26.49) 1.003 (25.48)	0.719 (18.26)	.103 (2.62) .077 (1.96)	.153 (3.89) .127 (3.23)	.952 (24.18) .928 (23.57)	.927 (23.55) .903 (22.94)	0.340 (8.64)	.136 (3.45) .120 (3.05)	.112-40 UNC	M3X0.5	.084 (2.13) .076 (1.93)	0.100 (2.54)
B	11	1.043 (26.49) 1.019 (25.88)	1.136 (28.85) 1.096 (27.84)	0.812 (20.62)					0.468 (11.89)					
C	13	1.137 (28.88) 1.114 (28.30)	1.230 (31.24) 1.190 (30.23)	0.906 (23.01)					0.572 (14.53)					
D	15	1.232 (31.29) 1.208 (30.68)	1.293 (32.84) 1.253 (31.83)	0.969 (24.61)					0.705 (17.91)					
E	17	1.323 (33.60) 1.299 (32.99)	1.386 (35.20) 1.346 (34.19)	1.062 (26.97)					0.830 (21.08)					
F	19	1.449 (36.80) 1.425 (36.20)	1.480 (37.59) 1.440 (36.58)	1.156 (29.36)					0.934 (23.72)					
G	21	1.575 (40.01) 1.551 (39.40)	1.574 (39.98) 1.534 (38.96)	1.250 (31.75)	.133 (3.38) .107 (2.72)				1.055 (26.80)					
H	23	1.701 (43.21) 1.677 (42.60)	1.759 (44.68) 1.719 (43.66)	1.375 (34.93)		.183 (4.65) .157 (3.99)			1.160 (29.46)	.162 (4.11) .146 (3.71)	.138-32 UNC	M4X0.7		
J	25	1.823 (46.30) 1.799 (45.69)	1.884 (47.85) 1.844 (46.84)	1.500 (38.10)					1.307 (33.20)				.131 (3.33) .123 (3.12)	0.109 (2.77)

© 2025 Glenair, Inc • 1211 Air Way, Glendale, CA 91201 • 818-247-6000 • www.glenair.com • U.S. CAGE code 06324 •

MIL-DTL-38999 Series I Type
231-207 Wall-mount receptacles, flush flange

CS WALL-MOUNT RECEPTACLE

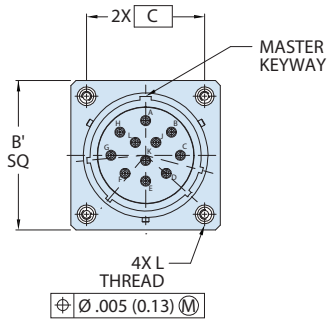

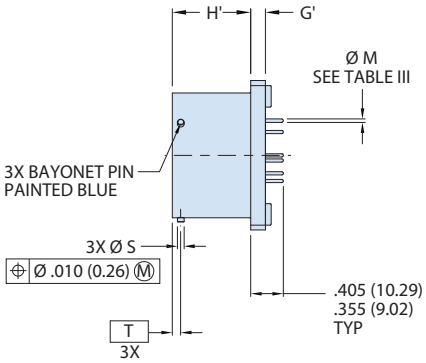

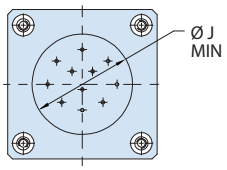

CS - WALL MOUNT RECEPTACLE
WITH STANDARD CLINCH NUTS (SEE TABLE IV)

D0 WALL-MOUNT RECEPTACLE

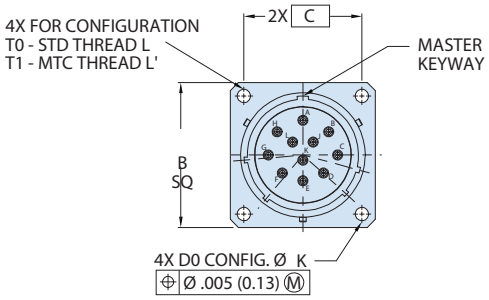

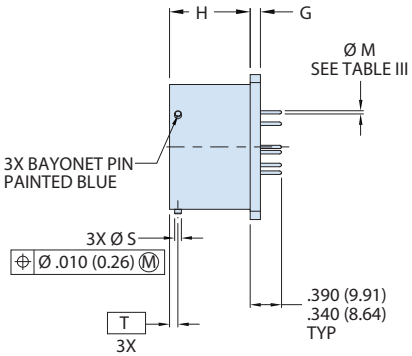

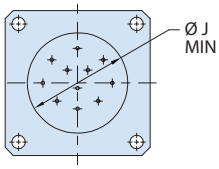

D0 - WALL MOUNT RECEPTACLE
WITH THRU HOLES (SEE TABLE IV)

OR

T0 - WALL MOUNT RECEPTACLE WITH STD TAPPED HOLES
T1 - WALL MOUNT RECEPTACLE WITH MTC TAPPED HOLES
(MAT; STAINLESS STEEL AND MARINE BRONZE)
(SEE TABLE IV)

© 2025 Glenair, Inc • 1211 Air Way, Glendale, CA 91201 • 818-247-6000 • www.glenair.com • U.S. CAGE code 06324 •
SuperNine MIL-DTL-38999 Series I Type · Dimensions in Inches (millimeters) are subject to change without notice.

MIL-DTL-38999 Series I Type
231-207 Wall-mount receptacles, flush flange

CS WALL-MOUNT RECEPTACLE

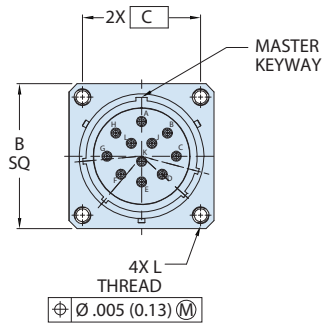

HM - WALL MOUNT RECEPTACLE
WITH METRIC HELICOILS (SEE TABLE IV)

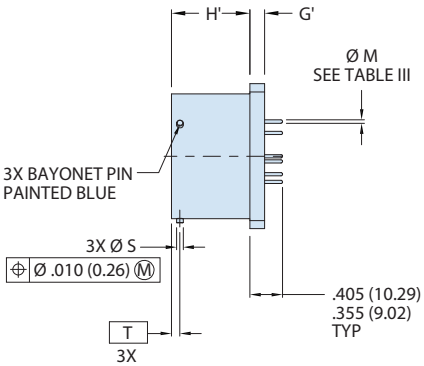

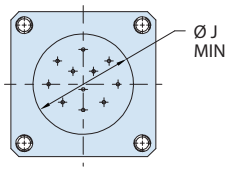

D0 WALL-MOUNT RECEPTACLE

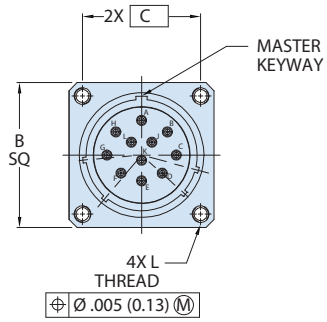

HS - WALL MOUNT RECEPTACLE
WITH STANDARD HELICOILS (SEE TABLE IV)

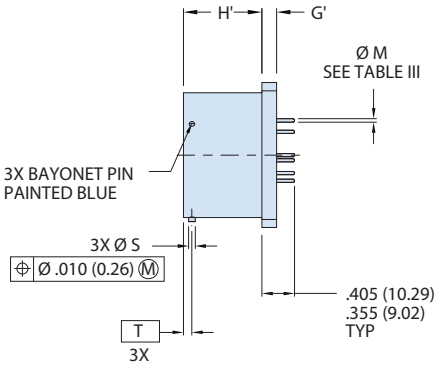

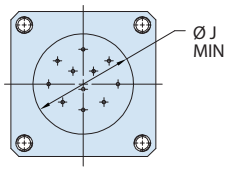

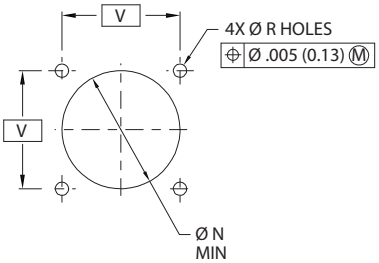

BACK PANEL
RECOMMENDED MOUNTING HOLES
SEE TABLE II

MIL-DTL-38999 Series I Type
231-207-07 Jam-nut mount receptacle, flush flange

HOW TO ORDER							
Sample Part Number	**231-207**	**-07**	**NF**	**17**	**-8**	**P**	**N**

Basic Part Number	**231-207-07**
Connector Style	(See Table II)
Material/Finish	**NF**, **MA**, **MT**, **ME**, **ZR**, **Z1**, **ZL**, **AB** (See Table I)
Connector Size	**9**, **11**, **13**, **15**, **17**, **19**, **21**, **23**, **25**
Insert Arrangement	PER MIL-STD-1560
Contact Style	**P** = Pin, PC Tail **S** = Socket, PC Tail
Alternate Polarization	**A**, **B**, **C**, **D**, **N** = Normal

"BETTER THAN QPL" FEATURES AND BENEFITS

- Improved, positive-lock, 3-point stainless-steel pin bayonet coupling with outstanding vibration and shock resistance
- Plug ground fingers for advanced EMC
- Glenair Signature tin zinc finish class is RoHS compliant and cadmium compatible
- Precision-machined key/keyway polarization for reliable mismating protection
- Expanded receptacle styles include Clinch-nut and Helicoil mounting, and In-Line configurations
- Scoop-proof design prevents pin damage and short circuits
- Fully tooled for all MIL-STD-1560 insert arrangements
- Contact options include size #22D, #20, #16, and #12 (see High-Speed series for Size #8)
- 500+ mating cycles exceeds MIL-DTL-38999 specification

TABLE III - PANEL-MOUNT

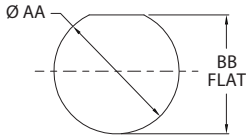

RECOMMENDED PANEL CUT OUT

Size Code	Shell Size	ØAA	BB Flat
A	9	0.703 (17.86) 0.693 (17.60)	0.661 (16.79) 0.654 (16.61)
B	11	0.835 (21.21) 0.825 (20.96)	0.771 (19.58) 0.761 (19.33)
C	13	1.020 (25.91) 1.010 (25.65)	0.955 (24.26) 0.945 (24.00)
D	15	1.145 (29.08) 1.135 (28.83)	1.085 (27.56) 1.075 (27.31)
E	17	1.270 (32.26) 1.260 (32.00)	1.210 (30.73) 1.200 (30.48)
F	19	1.395 (35.43) 1.385 (35.18)	1.335 (33.91) 1.325 (33.66)
G	21	1.520 (38.61) 1.510 (38.35)	1.460 (37.08) 1.450 (36.83)
H	23	1.645 (41.78) 1.635 (41.53)	1.585 (40.26) 1.575 (40.01)
J	25	1.770 (44.96) 1.760 (44.70)	1.710 (43.43) 1.700 (43.18)

POWER SPECIFICATIONS

- Max operating temperature is 200°C finish dependent
- Meets Mil-Spec service rating, insert dependent

TABLE I - MATERIAL/FINISH

Sym	Material	Finish
NF	Aluminum Alloy	Cad/O.D. Over Electroless Nickel
MA		Electroless Nickel, Matte
ME		Electroless Nickel
MN		Tri-Nickel Alloy
MT		Nickel-PTFE
TZ		Tin Zinc Over Electroless Nickel
ZR		Zinc Ni, Black (Tri-Valent CR)
Z1	Stainless Steel (SST)	Passivate
ZL		Electrodeposited Nickel
AB	Marine Bronze (MB)	None (Clean Only)

TABLE IV

Contact Size	PC Tail ØK
No 23	.020 (0.51) .018 (0.46)
No 22	.020 (0.51) .018 (0.46)
No 20	.030 (0.76) .028 (0.71)
No 16	.040 (1.02) .038 (0.97)
No 12	.072 (1.83) .070 (1.78)

© 2025 Glenair, Inc • 1211 Air Way, Glendale, CA 91201 • 818-247-6000 • www.glenair.com • U.S. CAGE code 06324 •
SuperNine MIL-DTL-38999 Series I Type · Dimensions in Inches (millimeters) are subject to change without notice.

MIL-DTL-38999 Series I Type
231-207-07 Jam-nut mount receptacle, flush flange

TABLE II - JAM-NUT MOUNT

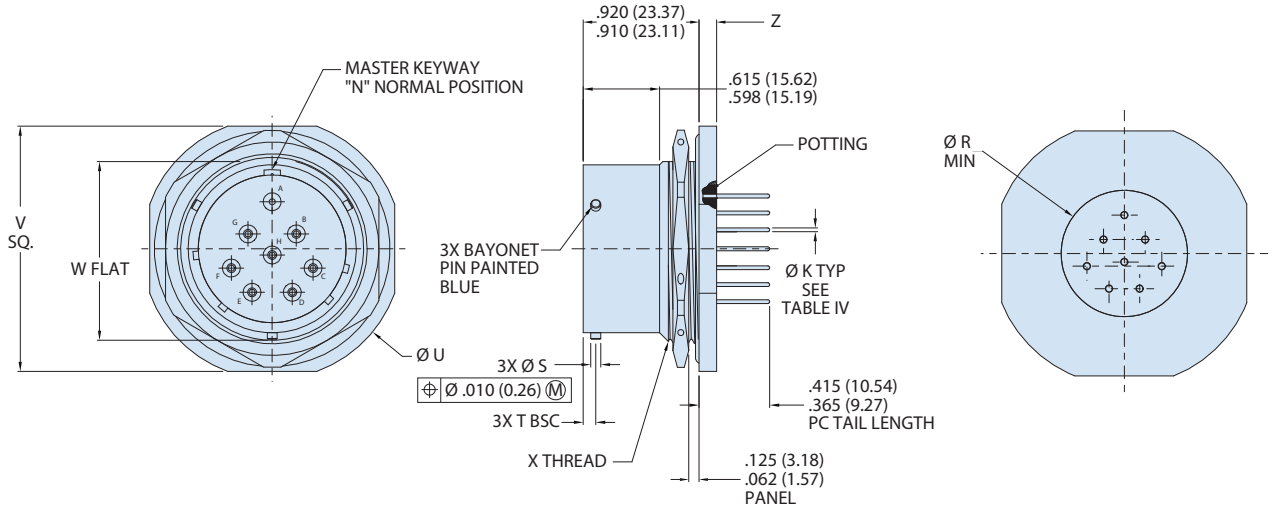

Size Code	Shell Size	ØR Min	ØS	T Bsc	ØU	V Sq.	W Flat	X Thread	Z
A	9	0.340 (8.64)	0.084 (2.13) 0.076 (1.93)	0.100 (2.54)	1.204 (30.58) 1.172 (29.77)	1.078 (27.38) 1.046 (26.57)	.655 (16.64) .645 (16.38)	.6875-24 UNEF-2A	.120 (3.05) .099 (2.51)
B	11	0.468 (11.89)			1.391 (35.33) 1.359 (34.52)	1.266 (32.16) 1.234 (31.34)	.755 (19.18) .745 (18.92)	.8125-20 UNEF-2A	
C	13	0.572 (14.53)			1.516 (38.51) 1.484 (37.69)	1.391 (35.33) 1.359 (34.52)	.942 (23.93) .932 (23.67)	1.0000-20 UNEF-2A	
D	15	0.705 (17.91)			1.641 (41.68) 1.609 (40.87)	1.516 (38.51) 1.484 (37.69)	1.066 (27.08) 1.056 (26.82)	1.1250-18 UNEF-2A	
E	17	0.830 (21.08)			1.766 (44.86) 1.734 (44.04)	1.641 (41.68) 1.609 (40.87)	1.191 (30.25) 1.181 (30.00)	1.2500-18 UNEF-2A	
F	19	0.934 (23.72)			1.954 (49.63) 1.922 (48.82)	1.828 (46.43) 1.796 (45.62)	1.316 (33.43) 1.306 (33.17)	1.3750-18 UNEF-2A	.151 (3.84) .130 (3.30)
G	21	1.055 (26.80)			2.078 (52.78) 2.046 (51.97)	1.954 (49.63) 1.922 (48.82)	1.441 (36.60) 1.431 (36.35)	1.5000-18 UNEF-2A	
H	23	1.160 (29.46)			2.204 (55.98) 2.172 (55.17)	2.078 (52.78) 2.046 (51.97)	1.566 (39.78) 1.556 (39.52)	1.6250-18 UNEF-2A	
J	25	1.307 (33.20)	.131 (3.33) .123 (3.12)	0.109 (2.77)	2.328 (59.13) 2.296 (58.32)	2.204 (55.98) 2.172 (55.17)	1.691 (42.95) 1.681 (42.70)	1.7500-18 UNEF-2A	

© 2025 Glenair, Inc • 1211 Air Way, Glendale, CA 91201 • 818-247-6000 • www.glenair.com • U.S. CAGE code 06324 •

MIL-DTL-38999 Series I Type
231-208 Wall-mount receptacle, stepped contacts

HOW TO ORDER

Sample Part Number	231-208	-CM	NF	23	-99	P	N

Basic Part Number	**231-208**
Connector Style	(See Table IV)
Material/Finish	**NF**, **MA**, **MT**, **ME**, **ZR**, **Z1**, **ZL**, **AB** (See Table III)
Connector Size	**9**, **11**, **13**, **15**, **17**, **19**, **21**, **23**, **25**
Insert Arrangement	PER MIL-STD-1560
Contact Style	**P** = Pin, PC Tail **S** = Socket, PC Tail
Alternate Polarization	**A**, **B**, **C**, **D**, **E**, **N** = Normal

"BETTER THAN QPL" FEATURES AND BENEFITS

- Improved, positive-lock, 3-point stainless-steel pin bayonet coupling with outstanding vibration and shock resistance
- Plug ground fingers for advanced EMC
- Glenair Signature tin zinc finish class is RoHS compliant and cadmium compatible
- Precision-machined key/keyway polarization for reliable mismating protection
- Expanded receptacle styles include Clinch-nut and Helicoil mounting, and In-Line configurations
- Scoop-proof design prevents pin damage and short circuits
- Fully tooled for all MIL-STD-1560 insert arrangements
- Contact options include size #22D, #20, #16, and #12 (see High-Speed series for Size #8)
- 500+ mating cycles exceeds MIL-DTL-38999 specification

POWER SPECIFICATIONS

- Max operating temperature is 200°C finish dependent
- Meets Mil-Spec service rating, insert dependent

TABLE II - MOUNTING HOLES

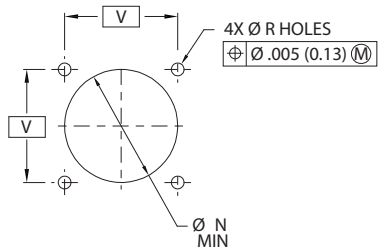

BACK PANEL
RECOMMENDED MOUNTING HOLES

Shell Size Code	Shell Size	ØN Min	ØR Holes	V Bsc
A	9	0.656 (16.66)	.133 (3.38) .123 (3.12)	0.719 (18.26)
B	11	0.796 (20.22)		0.812 (20.62)
C	13	0.922 (23.42)		0.906 (23.01)
D	15	1.047 (26.59)		0.969 (24.61)
E	17	1.219 (30.96)		1.062 (26.97)
F	19	1.297 (32.94)		1.156 (29.36)
G	21	1.422 (36.12)		1.250 (31.75)
H	23	1.547 (39.29)	.159 (4.04) .149 (3.78)	1.375 (34.93)
J	25	1.672 (42.47)	.155 (3.94) .145 (3.68)	1.500 (38.10)

TABLE III - MATERIAL/FINISH

Sym	Material	Finish
NF	Aluminum Alloy	Cad/O.D. Over Electroless Nickel
MA		Electroless Nickel, Matte
ME		Electroless Nickel
MN		Tri-Nickel Alloy
MT		Nickel-PTFE
TZ		Tin Zinc Over Electroless Nickel
ZR		Zinc Ni, Black (Tri-Valent CR)
Z1	Stainless Steel (SST)	Passivate
ZL		Electrodeposited Nickel
AB	Marine Bronze (MB)	None (Clean Only)

TABLE IV - CONNECTOR STYLE

SYM	Description
CM	Receptacle, Wall-mount With Metric Clinch-nuts
CS	Receptacle, Wall-mount With Standard Clinch-nuts
D0	Receptacle, Wall-mount With Thru Holes
HM	Receptacle, Wall-mount With Metric Helicoils
HS	Receptacle, Wall-mount With Standard Helicoils
T0	Receptacle, Wall-mount With Std Tapped Holes (MAT; SST & MB)
T1	Receptacle, Wall-mount With Mtc Tapped Holes (MAT; SST & MB)

TABLE V

Contact Size	PC Tail ØK
No 23	.020 (0.51) .018 (0.46)
No 22	.020 (0.51) .018 (0.46)
No 20	.030 (0.76) .028 (0.71)
No 16	.040 (1.02) .038 (0.97)
No 12	.072 (1.83) .070 (1.78)

© 2025 Glenair, Inc • 1211 Air Way, Glendale, CA 91201 • 818-247-6000 • www.glenair.com • U.S. CAGE code 06324 •
SuperNine MIL-DTL-38999 Series I Type · Dimensions in Inches (millimeters) are subject to change without notice.

MIL-DTL-38999 Series I Type
231-208 Wall-mount receptacle, stepped contacts

CM - WALL-MOUNT RECEPTACLE

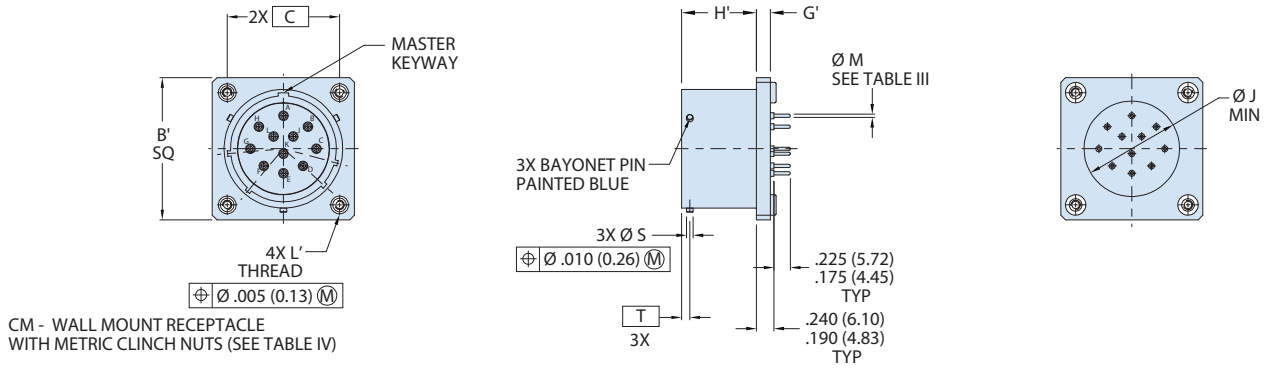

CM - WALL MOUNT RECEPTACLE
WITH METRIC CLINCH NUTS (SEE TABLE IV)

CS - WALL-MOUNT RECEPTACLE

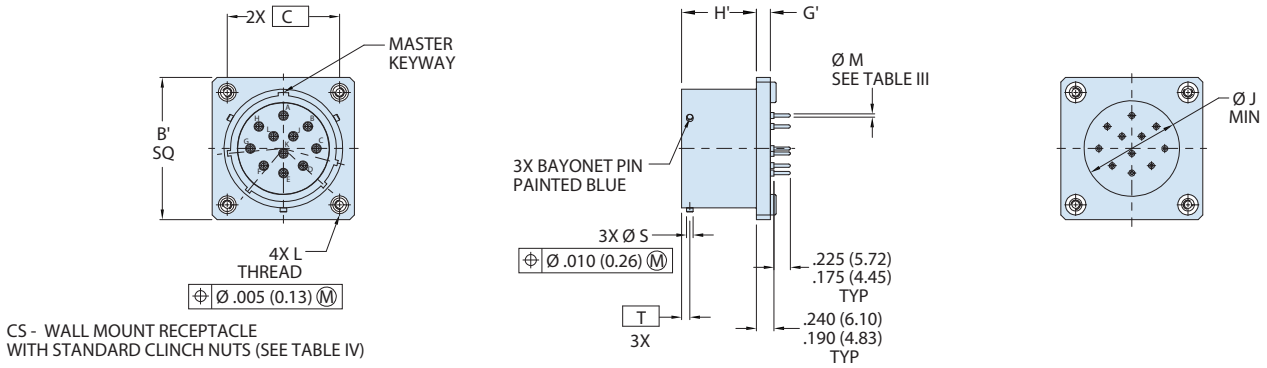

CS - WALL MOUNT RECEPTACLE
WITH STANDARD CLINCH NUTS (SEE TABLE IV)

Shell Size Code	Shell Size	B Sq	B' Sq	C Bsc	G	G'	H	H'	ØJ Min	ØK	L Thread	L' Thread	ØS	T Bsc
A	9	0.948 (24.08) 0.925 (23.50)	1.043 (26.49) 1.003 (25.48)	0.719 (18.26)	.103 (2.62) .077 (1.96)	.153 (3.89) .127 (3.23)	.952 (24.18) .928 (23.57)	.927 (23.55) .903 (22.94)	0.340 (8.64)	.136 (3.45) .120 (3.05)	.112-40 UNC	M3X0.5	.084 (2.13) .076 (1.93)	0.100 (2.54)
B	11	1.043 (26.49) 1.019 (25.88)	1.136 (28.85) 1.096 (27.84)	0.812 (20.62)					0.468 (11.89)					
C	13	1.137 (28.88) 1.114 (28.30)	1.230 (31.24) 1.190 (30.23)	0.906 (23.01)					0.572 (14.53)					
D	15	1.232 (31.29) 1.208 (30.68)	1.293 (32.84) 1.253 (31.83)	0.969 (24.61)					0.705 (17.91)					
E	17	1.323 (33.60) 1.299 (32.99)	1.386 (35.20) 1.346 (34.19)	1.062 (26.97)					0.830 (21.08)					
F	19	1.449 (36.80) 1.425 (36.20)	1.480 (37.59) 1.440 (36.58)	1.156 (29.36)					0.934 (23.72)					
G	21	1.575 (40.01) 1.551 (39.40)	1.574 (39.98) 1.534 (38.96)	1.250 (31.75)	.133 (3.38) .107 (2.72)				1.055 (26.80)					
H	23	1.701 (43.21) 1.677 (42.60)	1.759 (44.68) 1.719 (43.66)	1.375 (34.93)		.183 (4.65) .157 (3.99)			1.160 (29.46)	.162 (4.11) .146 (3.71)	.138-32 UNC	M4X0.7		
J	25	1.823 (46.30) 1.799 (45.69)	1.884 (47.85) 1.844 (46.84)	1.500 (38.10)					1.307 (33.20)				.131 (3.33) .123 (3.12)	0.109 (2.77)

© 2025 Glenair, Inc • 1211 Air Way, Glendale, CA 91201 • 818-247-6000 • www.glenair.com • U.S. CAGE code 06324 •

MIL-DTL-38999 Series I Type
231-208 Wall-mount receptacle, stepped contacts

D0 - WALL-MOUNT RECEPTACLE

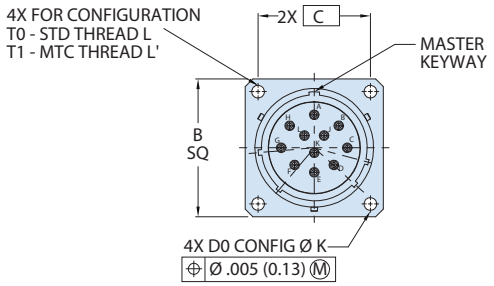

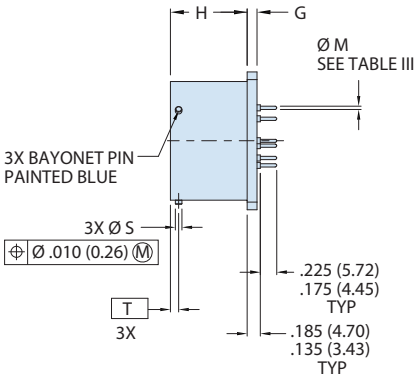

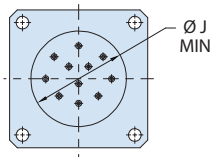

D0 - WALL MOUNT RECEPTACLE
WITH THRU HOLES (SEE TABLE IV)

OR

T0 - WALL MOUNT RECEPTACLE WITH STD TAPPED HOLES
T1 - WALL MOUNT RECEPTACLE WITH MTC TAPPED HOLES
(MAT; STAINLESS STEEL AND MARINE BRONZE)
(SEE TABLE IV)

HM - WALL-MOUNT RECEPTACLE

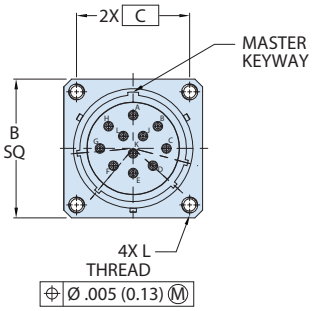

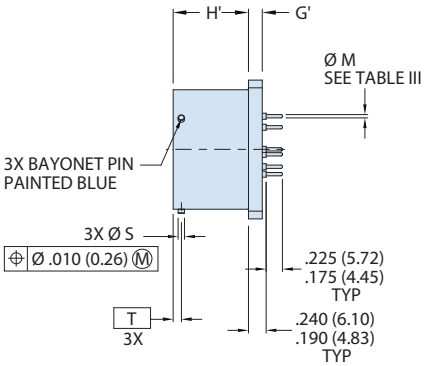

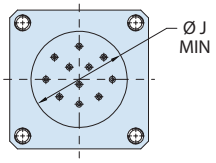

HM - WALL MOUNT RECEPTACLE
WITH METRIC HELICOILS (SEE TABLE IV)

HS - WALL-MOUNT RECEPTACLE

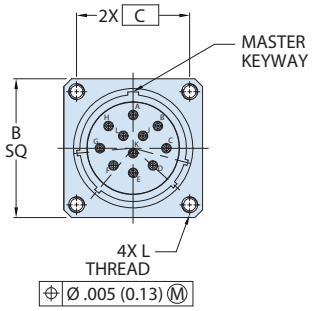

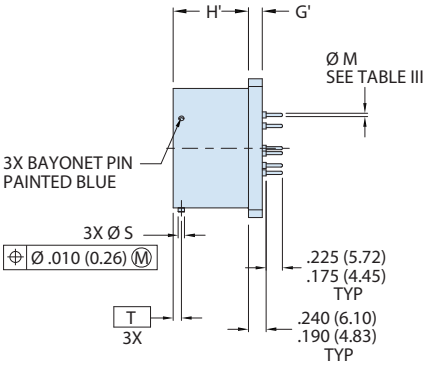

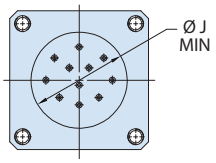

HS - WALL MOUNT RECEPTACLE
WITH STANDARD HELICOILS (SEE TABLE IV)

© 2025 Glenair, Inc • 1211 Air Way, Glendale, CA 91201 • 818-247-6000 • www.glenair.com • U.S. CAGE code 06324 •
SuperNine MIL-DTL-38999 Series I Type · Dimensions in Inches (millimeters) are subject to change without notice.

MIL-DTL-38999 Series I Type
231-208-07 Jam-nut mount receptacle, stepped contacts

HOW TO ORDER

Sample Part Number	231-208	-07	NF	17	-8	P	N

Basic Part Number	**231-208-07**
Connector Style	**07** = Jam-nut, Standoff STD Thread **17** = Jam-nut, Standoff Metric Thread
Material/Finish	**NF**, **MA**, **MT**, **ME**, **ZR**, **Z1**, **ZL**, **AB** (See Table II)
Connector Size	**9**, **11**, **13**, **15**, **17**, **19**, **21**, **23**, **25**
Insert Arrangement	PER MIL-STD-1560
Contact Style	**P** = Pin, PC Tail **S** = Socket, PC Tail
Alternate Polarization	**A**, **B**, **C**, **D**, **N** = Normal

"BETTER THAN QPL" FEATURES AND BENEFITS

- Improved, positive-lock, 3-point stainless-steel pin bayonet coupling with outstanding vibration and shock resistance
- Plug ground fingers for advanced EMC
- Glenair Signature tin zinc finish class is RoHS compliant and cadmium compatible
- Precision-machined key/keyway polarization for reliable mismating protection
- Expanded receptacle styles include Clinch-nut and Helicoil mounting, and In-Line configurations
- Scoop-proof design prevents pin damage and short circuits
- Fully tooled for all MIL-STD-1560 insert arrangements
- Contact options include size #22D, #20, #16, and #12 (see High-Speed series for Size #8)
- 500+ mating cycles exceeds MIL-DTL-38999 specification

POWER SPECIFICATIONS

- Max operating temperature is 200°C finish dependent
- Meets Mil-Spec service rating, insert dependent

TABLE III - PANEL-MOUNT

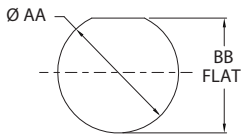

RECOMMENDED PANEL CUT OUT

Size Code	Shell Size	ØAA Flat	BB
A	9	.703 (17.86) .693 (17.60)	.661 (16.79) .654 (16.61)
B	11	.835 (21.21) .825 (20.96)	.771 (19.58) .761 (19.33)
C	13	1.020 (25.91) 1.010 (25.65)	.955 (24.26) .945 (24.00)
D	15	1.145 (29.08) 1.135 (28.83)	1.085 (27.56) 1.075 (27.31)
E	17	1.270 (32.26) 1.260 (32.00)	1.210 (30.73) 1.200 (30.48)
F	19	1.395 (35.43) 1.385 (35.18)	1.335 (33.91) 1.325 (33.66)
G	21	1.520 (38.61) 1.510 (38.35)	1.460 (37.08) 1.450 (36.83)
H	23	1.645 (41.78) 1.635 (41.53)	1.585 (40.26) 1.575 (40.01)
J	25	1.770 (44.96) 1.760 (44.70)	1.710 (43.43) 1.700 (43.18)

TABLE II - MATERIAL/FINISH

Sym	Material	Finish
NF	Aluminum Alloy	Cad/O.D. Over Electroless Nickel
MA		Electroless Nickel, Matte
ME		Electroless Nickel
MN		Tri-Nickel Alloy
MT		Nickel-PTFE
TZ		Tin Zinc Over Electroless Nickel
ZR		Zinc Ni, Black (Tri-Valent CR)
Z1	Stainless Steel (SST)	Passivate
ZL		Electrodeposited Nickel
AB	Marine Bronze (MB)	None (Clean Only)

TABLE V

Contact Size	PC Tail ØK
No 23	.020 (0.51) .018 (0.46)
No 22	.020 (0.51) .018 (0.46)
No 20	.030 (0.76) .028 (0.71)
No 16	.040 (1.02) .038 (0.97)
No 12	.072 (1.83) .070 (1.78)

© 2025 Glenair, Inc • 1211 Air Way, Glendale, CA 91201 • 818-247-6000 • www.glenair.com • U.S. CAGE code 06324 •

MIL-DTL-38999 Series I Type
231-208-07 Jam-nut mount receptacle, stepped contacts

TABLE II - JAM-NUT MOUNT

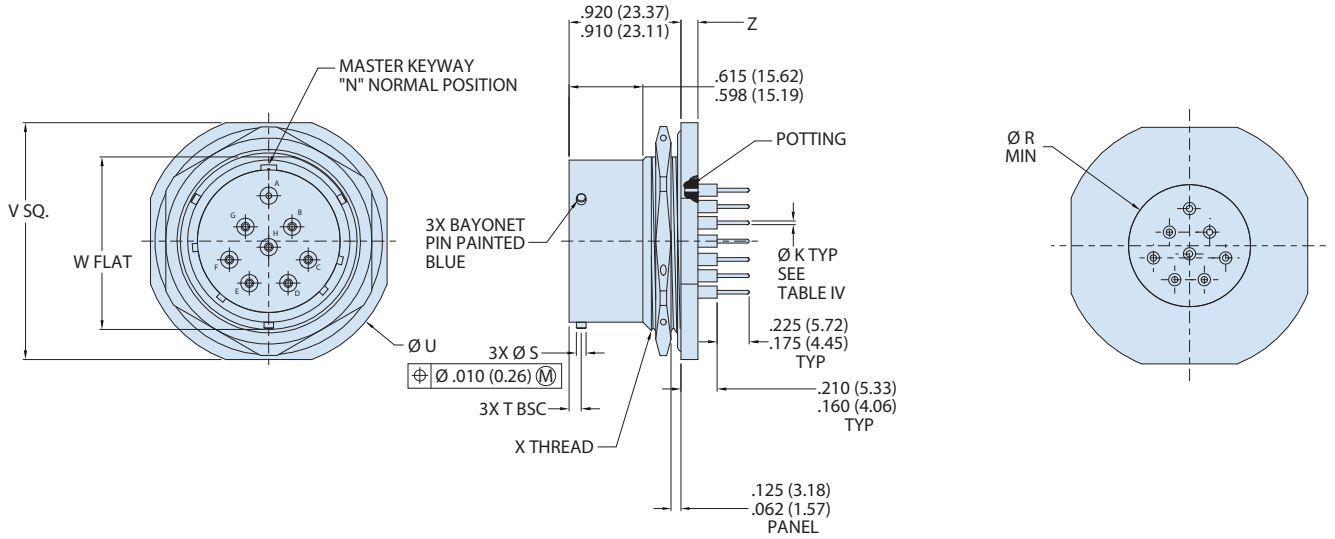

Size Code	Shell Size	ØR Min	ØS	T BSC	ØU	V Sq.	W Flat	X Thread	Z
A	9	.340 (8.64)	.084 (2.13) .076 (1.93)	.100 (2.54)	1.204 (30.58) 1.172 (29.77)	1.078 (27.38) 1.046 (26.57)	.655 (16.64) .645 (16.38)	.6875-24 UNEF-2A	.120 (3.05) .099 (2.51)
B	11	.468 (11.89)			1.391 (35.33) 1.359 (34.52)	1.266 (32.16) 1.234 (31.34)	.755 (19.18) .745 (18.92)	.8125-20 UNEF-2A	
C	13	.572 (14.53)			1.516 (38.51) 1.484 (37.69)	1.391 (35.33) 1.359 (34.52)	.942 (23.93) .932 (23.67)	1.0000-20 UNEF-2A	
D	15	.705 (17.91)			1.641 (41.68) 1.609 (40.87)	1.516 (38.51) 1.484 (37.69)	1.066 (27.08) 1.056 (26.82)	1.1250-18 UNEF-2A	
E	17	.830 (21.08)			1.766 (44.86) 1.734 (44.04)	1.641 (41.68) 1.609 (40.87)	1.191 (30.25) 1.181 (30.00)	1.2500-18 UNEF-2A	
F	19	.934 (23.72)			1.954 (49.63) 1.922 (48.82)	1.828 (46.43) 1.796 (45.62)	1.316 (33.43) 1.306 (33.17)	1.3750-18 UNEF-2A	.151 (3.84) .130 (3.30)
G	21	1.055 (26.80)			2.078 (52.78) 2.046 (51.97)	1.954 (49.63) 1.922 (48.82)	1.441 (36.60) 1.431 (36.35)	1.5000-18 UNEF-2A	
H	23	1.160 (29.46)			2.204 (55.98) 2.172 (55.17)	2.078 (52.78) 2.046 (51.97)	1.566 (39.78) 1.556 (39.52)	1.6250-18 UNEF-2A	
J	25	1.307 (33.20)	.131 (3.33) .123 (3.12)	.109 (2.77)	2.328 (59.13) 2.296 (58.32)	2.204 (55.98) 2.172 (55.17)	1.691 (42.95) 1.681 (42.70)	1.7500-18 UNEF-2A	

© 2025 Glenair, Inc • 1211 Air Way, Glendale, CA 91201 • 818-247-6000 • www.glenair.com • U.S. CAGE code 06324 •
SuperNine MIL-DTL-38999 Series I Type · Dimensions in Inches (millimeters) are subject to change without notice.

MIL-DTL-38999 Series I Type
231-209 Wall-mount receptacle, washout standoffs

HOW TO ORDER

Sample Part Number	231-209	-CM	NF	23	-99	P	N

Basic Part Number	**231-209**
Connector Style	(See Table IV)
Material/Finish	**NF**, **MA**, **MT**, **ME**, **ZR**, **Z1**, **ZL**, **AB** (See Table III)
Connector Size	**9**, **11**, **13**, **15**, **17**, **19**, **21**, **23**, **25**
Insert Arrangement	PER MIL-STD-1560
Contact Style	**P** = Pin, PC Tail **S** = Socket, PC Tail
Alternate Polarization	**A**, **B**, **C**, **D**, **E**, **N** = Normal

"BETTER THAN QPL" FEATURES AND BENEFITS

- Improved, positive-lock, 3-point stainless-steel pin bayonet coupling with outstanding vibration and shock resistance
- Plug ground fingers for advanced EMC
- Glenair Signature tin zinc finish class is RoHS compliant and cadmium compatible
- Precision-machined key/keyway polarization for reliable mismating protection
- Expanded receptacle styles include Clinch-nut and Helicoil mounting, and In-Line configurations
- Scoop-proof design prevents pin damage and short circuits
- Fully tooled for all MIL-STD-1560 insert arrangements
- Contact options include size #22D, #20, #16, and #12 (see High-Speed series for Size #8)
- 500+ mating cycles exceeds MIL-DTL-38999 specification

POWER SPECIFICATIONS

- Max operating temperature is 200°C finish dependent
- Meets Mil-Spec service rating, insert dependent

TABLE II - MOUNTING HOLES

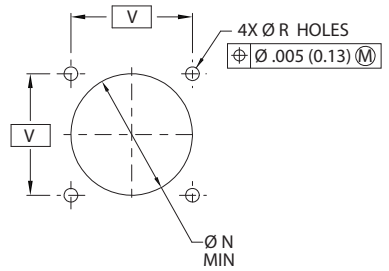

BACK PANEL
RECOMMENDED MOUNTING HOLES

Shell Size Code	Shell Size	ØN Min	ØR Holes	V Bsc
A	9	0.656 (16.66)	.133 (3.38) .123 (3.12)	0.719 (18.26)
B	11	0.796 (20.22)		0.812 (20.62)
C	13	0.922 (23.42)		0.906 (23.01)
D	15	1.047 (26.59)		0.969 (24.61)
E	17	1.219 (30.96)		1.062 (26.97)
F	19	1.297 (32.94)		1.156 (29.36)
G	21	1.422 (36.12)		1.250 (31.75)
H	23	1.547 (39.29)	.159 (4.04) .149 (3.78)	1.375 (34.93)
J	25	1.672 (42.47)	.155 (3.94) .145 (3.68)	1.500 (38.10)

TABLE III - MATERIAL/FINISH

Sym	Material	Finish
NF	Aluminum Alloy	Cad/O.D. Over Electroless Nickel
MA		Electroless Nickel, Matte
ME		Electroless Nickel
MN		Tri-Nickel Alloy
MT		Nickel-PTFE
TZ		Tin Zinc Over Electroless Nickel
ZR		Zinc Ni, Black (Tri-Valent CR)
Z1	Stainless Steel (SST)	Passivate
ZL		Electrodeposited Nickel
AB	Marine Bronze (MB)	None (Clean Only)

TABLE IV - CONNECTOR STYLE

SYM	Description
CM	Receptacle, Wall-mount With Metric Clinch-nuts
CS	Receptacle, Wall-mount With Standard Clinch-nuts
D0	Receptacle, Wall-mount With Thru Holes
HM	Receptacle, Wall-mount With Metric Helicoils
HS	Receptacle, Wall-mount With Standard Helicoils
T0	Receptacle, Wall-mount With Std Tapped Holes (MAT; SST & MB)
T1	Receptacle, Wall-mount With Mtc Tapped Holes (MAT; SST & MB)

TABLE V

Contact Size	PC Tail ØK
No 23	.020 (0.51) .018 (0.46)
No 22	.020 (0.51) .018 (0.46)
No 20	.030 (0.76) .028 (0.71)
No 16	.040 (1.02) .038 (0.97)
No 12	.072 (1.83) .070 (1.78)

© 2025 Glenair, Inc • 1211 Air Way, Glendale, CA 91201 • 818-247-6000 • www.glenair.com • U.S. CAGE code 06324 •

MIL-DTL-38999 Series I Type
231-209 Wall-mount receptacle, washout standoffs

CM - WALL-MOUNT RECEPTACLE

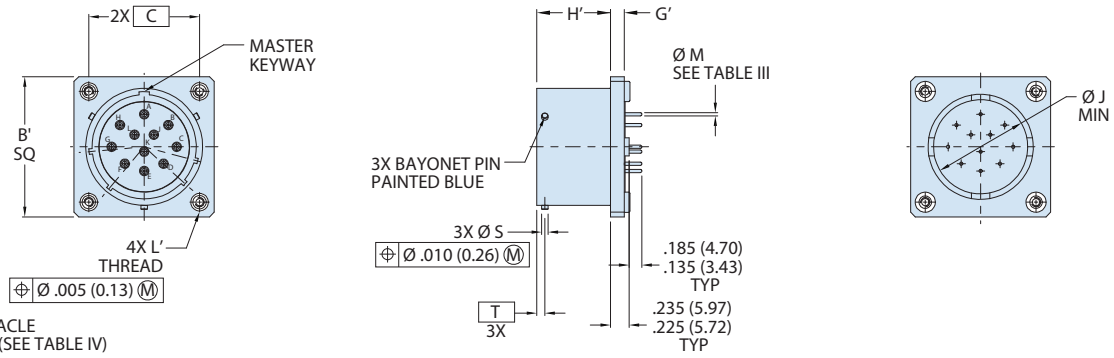

CM - WALL MOUNT RECEPTACLE
WITH METRIC CLINCH NUTS (SEE TABLE IV)

CS - WALL-MOUNT RECEPTACLE

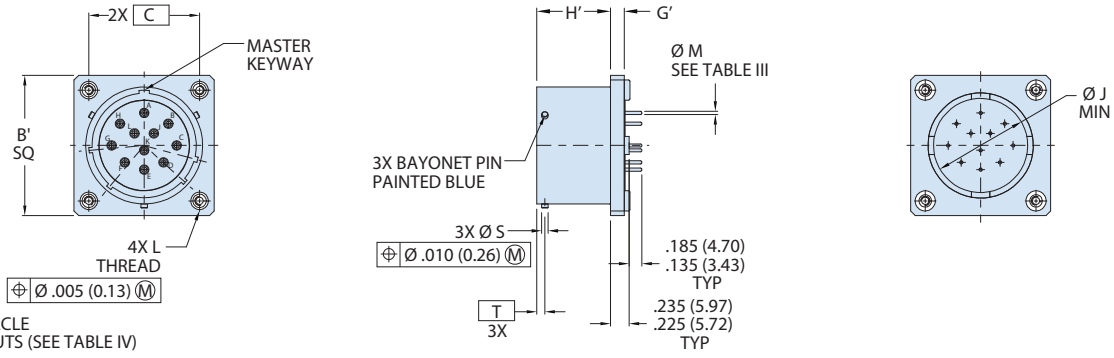

CS - WALL MOUNT RECEPTACLE
WITH STANDARD CLINCH NUTS (SEE TABLE IV)

D0 - WALL-MOUNT RECEPTACLE

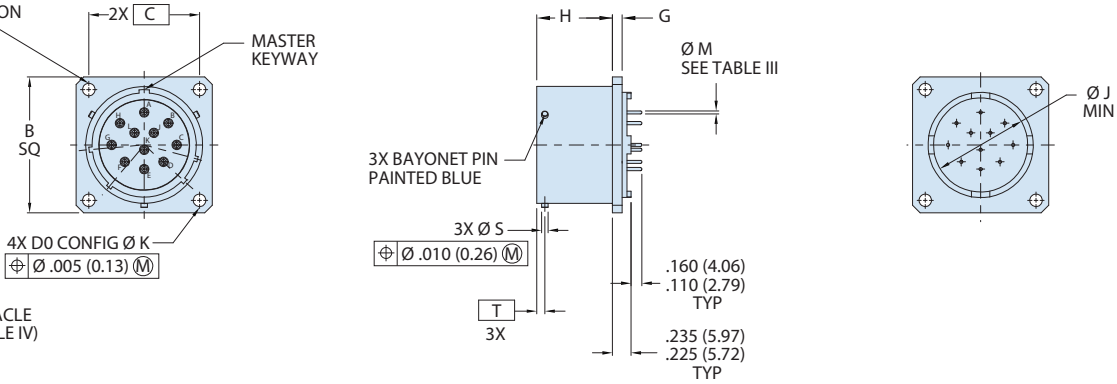

D0 - WALL MOUNT RECEPTACLE
WITH THRU HOLES (SEE TABLE IV)

OR

T0 - WALL MOUNT RECEPTACLE WITH STD TAPPED HOLES
T1 - WALL MOUNT RECEPTACLE WITH MTC TAPPED HOLES
(MAT; STAINLESS STEEL AND MARINE BRONZE)
(SEE TABLE IV)

© 2025 Glenair, Inc • 1211 Air Way, Glendale, CA 91201 • 818-247-6000 • www.glenair.com • U.S. CAGE code 06324 •
SuperNine MIL-DTL-38999 Series I Type · Dimensions in Inches (millimeters) are subject to change without notice.

MIL-DTL-38999 Series I Type
231-209 Wall-mount receptacle, washout standoffs

HM - WALL-MOUNT RECEPTACLE

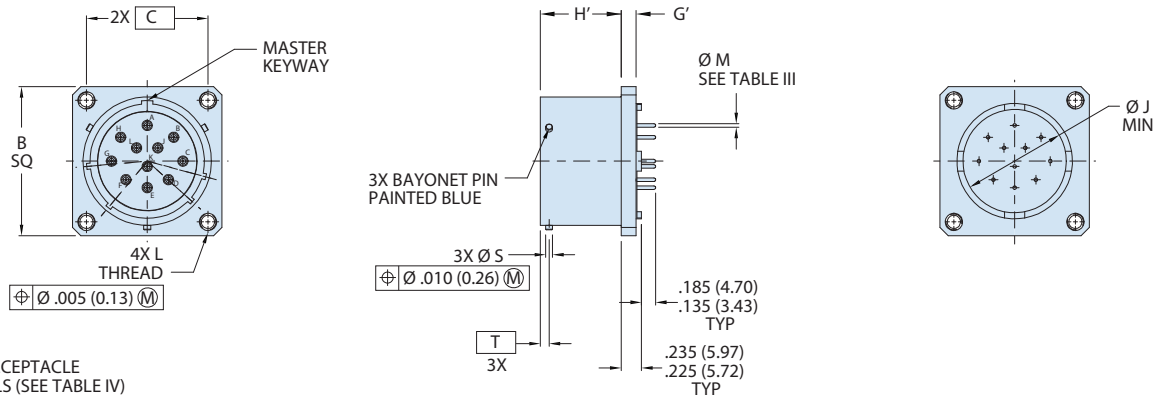

HM - WALL MOUNT RECEPTACLE
WITH METRIC HELICOILS (SEE TABLE IV)

HS - WALL-MOUNT RECEPTACLE

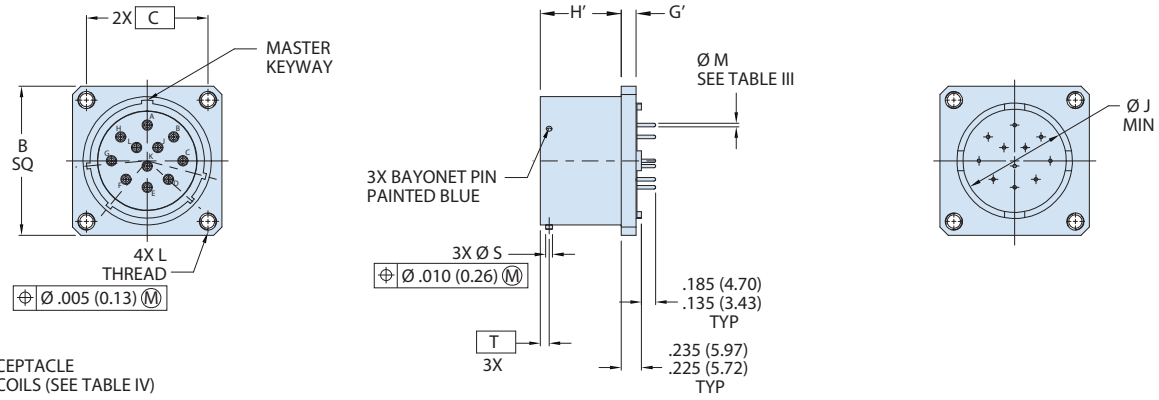

HS - WALL MOUNT RECEPTACLE
WITH STANDARD HELICOILS (SEE TABLE IV)

Shell Size Code	Shell Size	B Sq	B′ Sq	C Bsc	G	G′	H	H′	ØJ Min	Øk	L Thread	L′ Thread	ØS	T Bsc
A	9	0.948 (24.08) 0.925 (23.50)	1.043 (26.49) 1.003 (25.48)	0.719 (18.26)	.103 (2.62) .077 (1.96)	.153 (3.89) .127 (3.23)	.952 (24.18) .928 (23.57)	.927 (23.55) .903 (22.94)	0.340 (8.64)	.136 (3.45) .120 (3.05)	.112-40 UNC	M3X0.5	.084 (2.13) .076 (1.93)	0.100 (2.54)
B	11	1.043 (26.49) 1.019 (25.88)	1.136 (28.85) 1.096 (27.84)	0.812 (20.62)					0.468 (11.89)					
C	13	1.137 (28.88) 1.114 (28.30)	1.230 (31.24) 1.190 (30.23)	0.906 (23.01)					0.572 (14.53)					
D	15	1.232 (31.29) 1.208 (30.68)	1.293 (32.84) 1.253 (31.83)	0.969 (24.61)					0.705 (17.91)					
E	17	1.323 (33.60) 1.299 (32.99)	1.386 (35.20) 1.346 (34.19)	1.062 (26.97)					0.830 (21.08)					
F	19	1.449 (36.80) 1.425 (36.20)	1.480 (37.59) 1.440 (36.58)	1.156 (29.36)					0.934 (23.72)					
G	21	1.575 (40.01) 1.551 (39.40)	1.574 (39.98) 1.534 (38.96)	1.250 (31.75)	.133 (3.38) .107 (2.72)				1.055 (26.80)					
H	23	1.701 (43.21) 1.677 (42.60)	1.759 (44.68) 1.719 (43.66)	1.375 (34.93)		.183 (4.65) .157 (3.99)			1.160 (29.46)	.162 (4.11) .146 (3.71)	.138-32 UNC	M4X0.7		
J	25	1.823 (46.30) 1.799 (45.69)	1.884 (47.85) 1.844 (46.84)	1.500 (38.10)					1.307 (33.20)				.131 (3.33) .123 (3.12)	0.109 (2.77)

© 2025 Glenair, Inc • 1211 Air Way, Glendale, CA 91201 • 818-247-6000 • www.glenair.com • U.S. CAGE code 06324 •

MIL-DTL-38999 Series I Type
231-209-07 Jam-nut mount receptacle with standoffs

HOW TO ORDER

Sample Part Number	231-209	-07	NF	17	-8	P	N

Basic Part Number	**231-209-07**
Connector Style	**07** = Jam-nut, Standoff
Material/Finish	**NF**, **MA**, **MT**, **ME**, **ZR**, **Z1**, **ZL**, **AB** (See Table II)
Connector Size	**9**, **11**, **13**, **15**, **17**, **19**, **21**, **23**, **25**
Insert Arrangement	PER MIL-STD-1560
Contact Style	**P** = Pin, PC Tail **S** = Socket, PC Tail
Alternate Polarization	**A**, **B**, **C**, **D**, **N** = Normal

TABLE III - PANEL-MOUNT

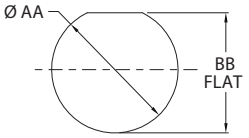

RECOMMENDED PANEL CUT OUT

Size Code	Shell Size	ØAA	BB FLAT
A	9	.703 (17.86) .693 (17.60)	.661 (16.79) .654 (16.61)
B	11	.835 (21.21) .825 (20.96)	.771 (19.58) .761 (19.33)
C	13	1.020 (25.91) 1.010 (25.65)	.955 (24.26) .945 (24.00)
D	15	1.145 (29.08) 1.135 (28.83)	1.085 (27.56) 1.075 (27.31)
E	17	1.270 (32.26) 1.260 (32.00)	1.210 (30.73) 1.200 (30.48)
F	19	1.395 (35.43) 1.385 (35.18)	1.335 (33.91) 1.325 (33.66)
G	21	1.520 (38.61) 1.510 (38.35)	1.460 (37.08) 1.450 (36.83)
H	23	1.645 (41.78) 1.635 (41.53)	1.585 (40.26) 1.575 (40.01)
J	25	1.770 (44.96) 1.760 (44.70)	1.710 (43.43) 1.700 (43.18)

TABLE II - MATERIAL/FINISH

Sym	Material	Finish
NF	Aluminum Alloy	Cad/O.D. Over Electroless Nickel
MA		Electroless Nickel, Matte
ME		Electroless Nickel
MN		Tri-Nickel Alloy
MT		Nickel-PTFE
TZ		Tin Zinc Over Electroless Nickel
ZR		Zinc Ni, Black (Tri-Valent CR)
Z1	Stainless Steel (SST)	Passivate
ZL		Electrodeposited Nickel
AB	Marine Bronze (MB)	None (Clean Only)

TABLE V

Contact Size	PC Tail ØK
No 23	.020 (0.51) .018 (0.46)
No 22	.020 (0.51) .018 (0.46)
No 20	.030 (0.76) .028 (0.71)
No 16	.040 (1.02) .038 (0.97)
No 12	.072 (1.83) .070 (1.78)

"BETTER THAN QPL" FEATURES AND BENEFITS

- Improved, positive-lock, 3-point stainless-steel pin bayonet coupling with outstanding vibration and shock resistance
- Plug ground fingers for advanced EMC
- Glenair Signature tin zinc finish class is RoHS compliant and cadmium compatible
- Precision-machined key/keyway polarization for reliable mismating protection
- Expanded receptacle styles include Clinch-nut and Helicoil mounting, and In-Line configurations
- Scoop-proof design prevents pin damage and short circuits
- Fully tooled for all MIL-STD-1560 insert arrangements
- Contact options include size #22D, #20, #16, and #12 (see High-Speed series for Size #8)
- 500+ mating cycles exceeds MIL-DTL-38999 specification

POWER SPECIFICATIONS

- Max operating temperature is 200°C finish dependent
- Meets Mil-Spec service rating, insert dependent

© 2025 Glenair, Inc • 1211 Air Way, Glendale, CA 91201 • 818-247-6000 • www.glenair.com • U.S. CAGE code 06324 •
SuperNine MIL-DTL-38999 Series I Type · Dimensions in Inches (millimeters) are subject to change without notice.

MIL-DTL-38999 Series I Type
231-209-07 Jam-nut mount receptacle with standoffs

TABLE II - JAM-NUT MOUNT

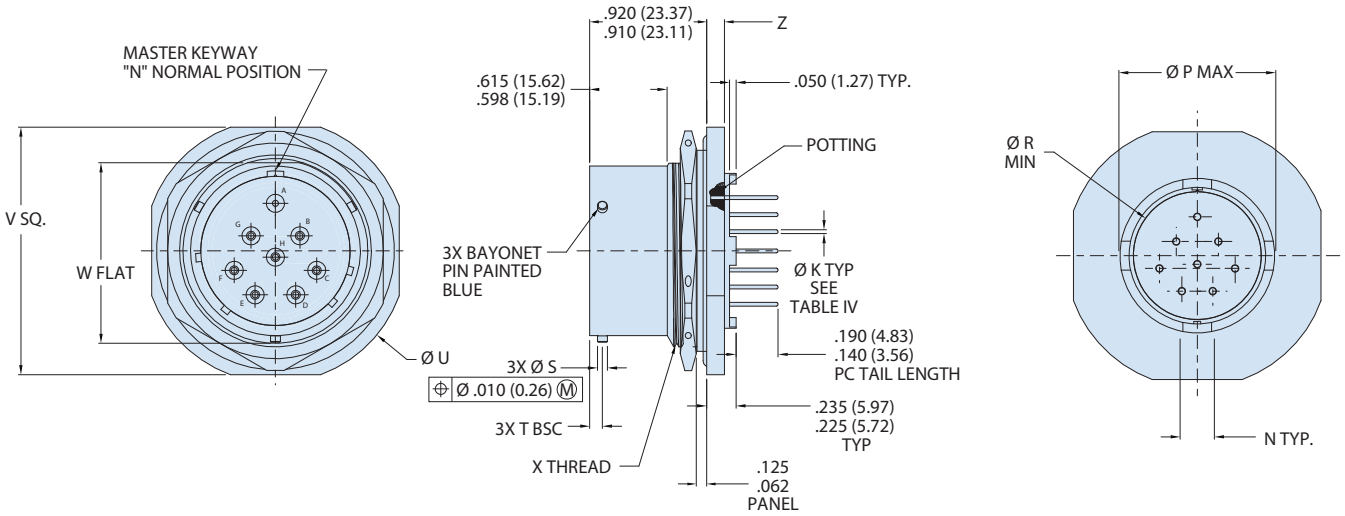

Size Code	Shell Size	ØP Max	ØR Min	ØS	T Bsc	ØU	V Sq.	W Flat	X Thread	Z	N
A	9	0.470 (11.94)	0.340 (8.64)	0.084 (2.13) 0.076 (1.93)	0.100 (2.54)	1.204 (30.58) 1.172 (29.77)	1.078 (27.38) 1.046 (26.57)	.655 (16.64) .645 (16.38)	.6875-24 UNEF-2A	.120 (3.05) .099 (2.51)	0.150 (3.81)
B	11	0.590 (14.99)	0.468 (11.89)			1.391 (35.33) 1.359 (34.52)	1.266 (32.16) 1.234 (31.34)	0.755 (19.18) 0.745 (18.92)	.8125-20 UNEF-2A		0.175 (4.45)
C	13	0.708 (17.98)	0.572 (14.53)			1.516 (38.51) 1.484 (37.69)	1.391 (35.33) 1.359 (34.52)	0.942 (23.93) 0.932 (23.67)	1.0000-20 UNEF-2A		
D	15	0.865 (21.97)	0.705 (17.91)			1.641 (41.68) 1.609 (40.87)	1.516 (38.51) 1.484 (37.69)	1.066 (27.08) 1.056 (26.82)	1.1250-18 UNEF-2A		0.200 (5.08)
E	17	0.985 (25.02)	0.830 (21.08)			1.766 (44.86) 1.734 (44.04)	1.641 (41.68) 1.609 (40.87)	1.191 (30.25) 1.181 (30.00)	1.2500-18 UNEF-2A		
F	19	1.105 (28.07)	0.934 (23.72)			1.954 (49.63) 1.922 (48.82)	1.828 (46.43) 1.796 (45.62)	1.316 (33.43) 1.306 (33.17)	1.3750-18 UNEF-2A	.151 (3.84) .130 (3.30)	
G	21	1.220 (30.99)	1.055 (26.80)			2.078 (52.78) 2.046 (51.97)	1.954 (49.63) 1.922 (48.82)	1.441 (36.60) 1.431 (36.35)	1.5000-18 UNEF-2A		0.225 (5.72)
H	23	1.340 (34.04)	1.160 (29.46)			2.204 (55.98) 2.172 (55.17)	2.078 (52.78) 2.046 (51.97)	1.566 (39.78) 1.556 (39.52)	1.6250-18 UNEF-2A		
J	25	1.455 (36.96)	1.307 (33.20)	0.131 (3.33) 0.123 (3.12)	0.109 (2.77)	2.328 (59.13) 2.296 (58.32)	2.204 (55.98) 2.172 (55.17)	1.691 (42.95) 1.681 (42.70)	1.7500-18 UNEF-2A		

© 2025 Glenair, Inc • 1211 Air Way, Glendale, CA 91201 • 818-247-6000 • www.glenair.com • U.S. CAGE code 06324 •

MIL-DTL-38999 Series I Type
231-210 Wall-mount receptacle with standoffs

HOW TO ORDER

Sample Part Number	231-210	-CM	NF	23	-99	P	N

Basic Part Number	**231-210**
Connector Style	(See Table IV)
Material/Finish	**NF**, **MA**, **MT**, **ME**, **ZR**, **Z1**, **ZL**, **AB** (See Table V)
Connector Size	**9**, **11**, **13**, **15**, **17**, **19**, **21**, **23**, **25**
Insert Arrangement	PER MIL-STD-1560
Contact Style	**P** = Pin, PC Tail **S** = Socket, PC Tail
Alternate Polarization	**A**, **B**, **C**, **D**, **E**, **N** = Normal

"BETTER THAN QPL" FEATURES AND BENEFITS

- Improved, positive-lock, 3-point stainless-steel pin bayonet coupling with outstanding vibration and shock resistance
- Plug ground fingers for advanced EMC
- Glenair Signature tin zinc finish class is RoHS compliant and cadmium compatible
- Precision-machined key/keyway polarization for reliable mismating protection
- Expanded receptacle styles include Clinch-nut and Helicoil mounting, and In-Line configurations
- Scoop-proof design prevents pin damage and short circuits
- Fully tooled for all MIL-STD-1560 insert arrangements
- Contact options include size #22D, #20, #16, and #12 (see High-Speed series for Size #8)
- 500+ mating cycles exceeds MIL-DTL-38999 specification

POWER SPECIFICATIONS

- Max operating temperature is 200°C finish dependent
- Meets Mil-Spec service rating, insert dependent

TABLE II - MOUNTING HOLES

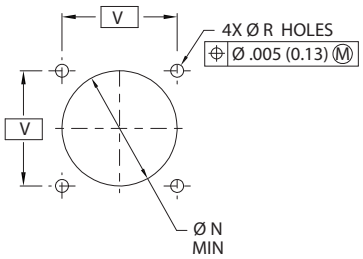

Shell Size Code	Shell Size	ØN Min	ØR Holes	V Bsc
A	9	0.656 (16.66)	.133 (3.38) .123 (3.12)	0.719 (18.26)
B	11	0.796 (20.22)		0.812 (20.62)
C	13	0.922 (23.42)		0.906 (23.01)
D	15	1.047 (26.59)		0.969 (24.61)
E	17	1.219 (30.96)		1.062 (26.97)
F	19	1.297 (32.94)		1.156 (29.36)
G	21	1.422 (36.12)		1.250 (31.75)
H	23	1.547 (39.29)	.159 (4.04) .149 (3.78)	1.375 (34.93)
J	25	1.672 (42.47)	.155 (3.94) .145 (3.68)	1.500 (38.10)

TABLE V - MATERIAL/FINISH

Sym	Material	Finish
NF	Aluminum Alloy	Cad/O.D. Over Electroless Nickel
MA		Electroless Nickel, Matte
ME		Electroless Nickel
MN		Tri-Nickel Alloy
MT		Nickel-PTFE
TZ		Tin Zinc Over Electroless Nickel
ZR		Zinc Ni, Black (Tri-Valent CR)
Z1	Stainless Steel (SST)	Passivate
ZL		Electrodeposited Nickel
AB	Marine Bronze (MB)	None (Clean Only)

TABLE IV - CONNECTOR STYLE

SYM	Description
CM	Receptacle, Wall-mount With Metric Clinch-nuts
CS	Receptacle, Wall-mount With Standard Clinch-nuts
D0	Receptacle, Wall-mount With Thru Holes
D1	Receptacle, Wall-mount With Thru Holes, Metric Stand-off thd.
HM	Receptacle, Wall-mount With Metric Helicoils
HS	Receptacle, Wall-mount With Standard Helicoils
T0	Receptacle, Wall-mount With Std Tapped Holes (MAT; SST & MB)
T1	Receptacle, Wall-mount With Mtc Tapped Holes (MAT; SST & MB)

TABLE III

Contact Size	PC Tail ØK
No 23	.020 (0.51) .018 (0.46)
No 22	.020 (0.51) .018 (0.46)
No 20	.030 (0.76) .028 (0.71)
No 16	.040 (1.02) .038 (0.97)
No 12	.072 (1.83) .070 (1.78)

© 2025 Glenair, Inc • 1211 Air Way, Glendale, CA 91201 • 818-247-6000 • www.glenair.com • U.S. CAGE code 06324 •
SuperNine MIL-DTL-38999 Series I Type · Dimensions in Inches (millimeters) are subject to change without notice.

MIL-DTL-38999 Series I Type
231-210 Wall-mount receptacle with standoffs

CM - WALL-MOUNT RECEPTACLE

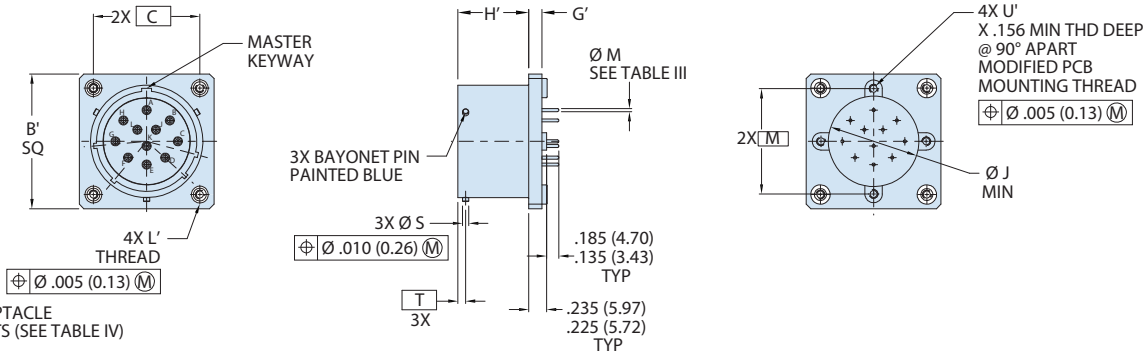

CM - WALL MOUNT RECEPTACLE
WITH METRIC CLINCH NUTS (SEE TABLE IV)

CS - WALL-MOUNT RECEPTACLE

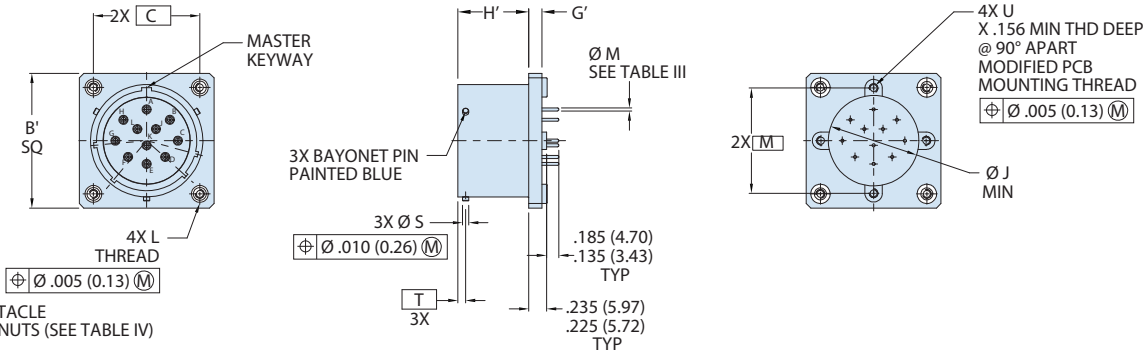

CS - WALL MOUNT RECEPTACLE
WITH STANDARD CLINCH NUTS (SEE TABLE IV)

D0 - WALL-MOUNT RECEPTACLE

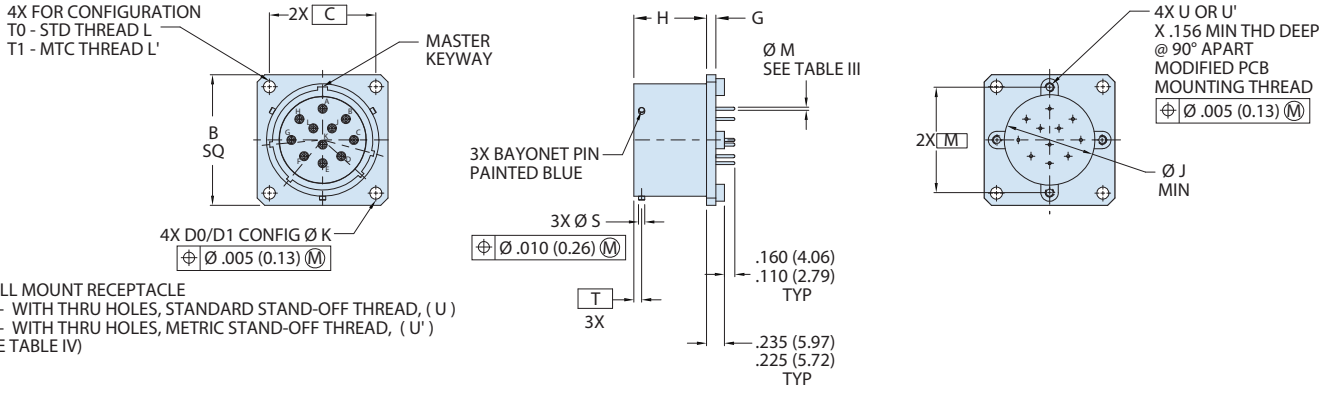

WALL MOUNT RECEPTACLE
D0 - WITH THRU HOLES, STANDARD STAND-OFF THREAD, (U)
D1 - WITH THRU HOLES, METRIC STAND-OFF THREAD, (U')
(SEE TABLE IV)

OR

T0 - WITH STD TAPPED HOLES AND STANDARD STAND-OFF THREAD, (U)
T1 - WITH MTC TAPPED HOLES AND METRIC STAND-OFF THREAD, (U')
(MAT; STAINLESS STEEL AND MARINE BRONZE) (SEE TABLE IV)

MIL-DTL-38999 Series I Type
231-210 Wall-mount receptacle with standoffs

HM - WALL-MOUNT RECEPTACLE

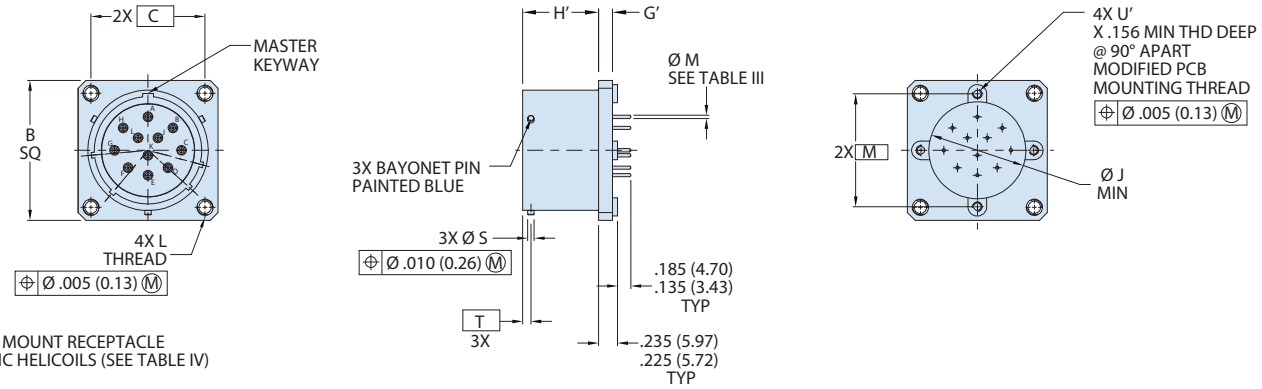

HM - WALL MOUNT RECEPTACLE
WITH METRIC HELICOILS (SEE TABLE IV)

HS - WALL-MOUNT RECEPTACLE

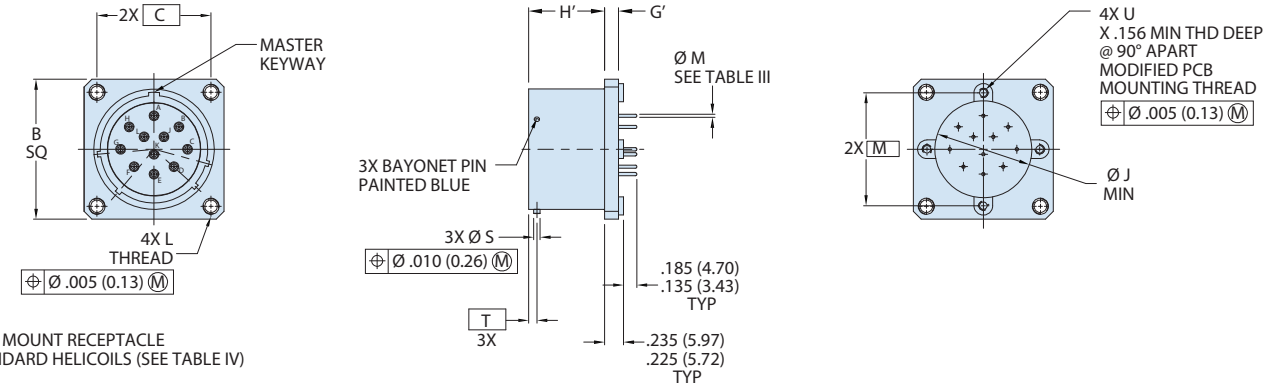

HS - WALL MOUNT RECEPTACLE
WITH STANDARD HELICOILS (SEE TABLE IV)

Shell Size Code	Shell Size	B Sq	B′ Sq	C Bsc	G	G′	H	H′	ØJ Min	ØK	L Thread	L′ Thread	M Bsc	ØS	T BSC	Stand-Off Threads U	Stand-Off Threads U′
A	9	.948 (24.08) .925 (23.50)	1.043 (26.49) 1.003 (25.48)	0.719 (18.26)	.103 (2.62) .077 (1.96)	.153 (3.89) .127 (3.23)	.952 (24.18) .928 (23.57)	.927 (23.55) .903 (22.94)	0.340 (8.64)	.136 (3.45) .120 (3.05)	.112-40 UNC	M3X0.5	0.594 (15.09)	.084 (2.13) .076 (1.93)	0.100 (2.54)	ACCEPTS .112-40 UNC-2A	ACCEPTS M3 X 0.5-6g
B	11	1.043 (26.49) 1.019 (25.88)	1.136 (28.85) 1.096 (27.84)	0.812 (20.62)					0.468 (11.89)				0.719 (18.26)				
C	13	1.137 (28.88) 1.114 (28.30)	1.230 (31.24) 1.190 (30.23)	0.906 (23.01)					0.572 (14.53)				0.812 (20.62)				
D	15	1.232 (31.29) 1.208 (30.68)	1.293 (32.84) 1.253 (31.83)	0.969 (24.61)					0.705 (17.91)				0.906 (23.01)				
E	17	1.323 (33.60) 1.299 (32.99)	1.386 (35.20) 1.346 (34.19)	1.062 (26.97)					0.830 (21.08)				1.030 (26.16)				
F	19	1.449 (36.80) 1.425 (36.20)	1.480 (37.59) 1.440 (36.58)	1.156 (29.36)					0.934 (23.72)				1.150 (29.21)				
G	21	1.575 (40.01) 1.551 (39.40)	1.574 (39.98) 1.534 (38.96)	1.250 (31.75)	.133 (3.38) .107 (2.72)				1.055 (26.80)				1.221 (31.01)				
H	23	1.701 (43.21) 1.677 (42.60)	1.759 (44.68) 1.719 (43.66)	1.375 (34.93)		.183 (4.65) .157 (3.99)			1.160 (29.46)	.162 (4.11) .146 (3.71)	.138-32 UNC	M4X0.7	1.360 (34.54)				
J	25	1.823 (46.30) 1.799 (45.69)	1.884 (47.85) 1.844 (46.84)	1.500 (38.10)					1.307 (33.20)				1.475 (37.47)	.131 (3.33) .123 (3.12)	0.109 (2.77)		

© 2025 Glenair, Inc • 1211 Air Way, Glendale, CA 91201 • 818-247-6000 • www.glenair.com • U.S. CAGE code 06324 •
SuperNine MIL-DTL-38999 Series I Type · Dimensions in Inches (millimeters) are subject to change without notice.

MIL-DTL-38999 Series I Type
231-210-07 Jam-nut mount receptacle with standoffs

HOW TO ORDER

Sample Part Number	231-210	-07	NF	17	-8	P	N

Basic Part Number	**231-210-07**
Connector Style	**07** = Jam-nut, Standoff Standard Thread **17** = Jam-nut. Standoff Metric Thread
Material/Finish	**NF**, **MA**, **MT**, **ME**, **ZR**, **Z1**, **ZL**, **AB** (See Table II)
Connector Size	**9**, **11**, **13**, **15**, **17**, **19**, **21**, **23**, **25**
Insert Arrangement	PER MIL-STD-1560
Contact Style	**P** = Pin, PC Tail **S** = Socket, PC Tail
Alternate Polarization	**A**, **B**, **C**, **D**, **N** = Normal

TABLE III - PANEL-MOUNT

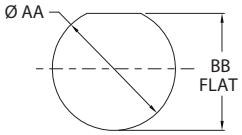

RECOMMENDED PANEL CUT OUT

Size Code	Shell Size	ØAA	BB FLAT
A	9	.703 (17.86) .693 (17.60)	.661 (16.79) .654 (16.61)
B	11	.835 (21.21) .825 (20.96)	.771 (19.58) .761 (19.33)
C	13	1.020 (25.91) 1.010 (25.65)	.955 (24.26) .945 (24.00)
D	15	1.145 (29.08) 1.135 (28.83)	1.085 (27.56) 1.075 (27.31)
E	17	1.270 (32.26) 1.260 (32.00)	1.210 (30.73) 1.200 (30.48)
F	19	1.395 (35.43) 1.385 (35.18)	1.335 (33.91) 1.325 (33.66)
G	21	1.520 (38.61) 1.510 (38.35)	1.460 (37.08) 1.450 (36.83)
H	23	1.645 (41.78) 1.635 (41.53)	1.585 (40.26) 1.575 (40.01)
J	25	1.770 (44.96) 1.760 (44.70)	1.710 (43.43) 1.700 (43.18)

TABLE II - MATERIAL/FINISH

Sym	Material	Finish
NF	Aluminum Alloy	Cad/O.D. Over Electroless Nickel
MA		Electroless Nickel, Matte
ME		Electroless Nickel
MN		Tri-Nickel Alloy
MT		Nickel-PTFE
TZ		Tin Zinc Over Electroless Nickel
ZR		Zinc Ni, Black (Tri-Valent CR)
Z1	Stainless Steel (SST)	Passivate
ZL		Electrodeposited Nickel
AB	Marine Bronze (MB)	None (Clean Only)

TABLE V

Contact Size	PC Tail ØK
No 23	.020 (0.51) .018 (0.46)
No 22	.020 (0.51) .018 (0.46)
No 20	.030 (0.76) .028 (0.71)
No 16	.040 (1.02) .038 (0.97)
No 12	.072 (1.83) .070 (1.78)

"BETTER THAN QPL" FEATURES AND BENEFITS

- Improved, positive-lock, 3-point stainless-steel pin bayonet coupling with outstanding vibration and shock resistance
- Plug ground fingers for advanced EMC
- Glenair Signature tin zinc finish class is RoHS compliant and cadmium compatible
- Precision-machined key/keyway polarization for reliable mismating protection
- Expanded receptacle styles include Clinch-nut and Helicoil mounting, and In-Line configurations
- Scoop-proof design prevents pin damage and short circuits
- Fully tooled for all MIL-STD-1560 insert arrangements
- Contact options include size #22D, #20, #16, and #12 (see High-Speed series for Size #8)
- 500+ mating cycles exceeds MIL-DTL-38999 specification

POWER SPECIFICATIONS

- Max operating temperature is 200°C finish dependent
- Meets Mil-Spec service rating, insert dependent

© 2025 Glenair, Inc • 1211 Air Way, Glendale, CA 91201 • 818-247-6000 • www.glenair.com • U.S. CAGE code 06324 •

MIL-DTL-38999 Series I Type
231-210-07 Jam-nut mount receptacle with standoffs

TABLE II - JAM-NUT MOUNT

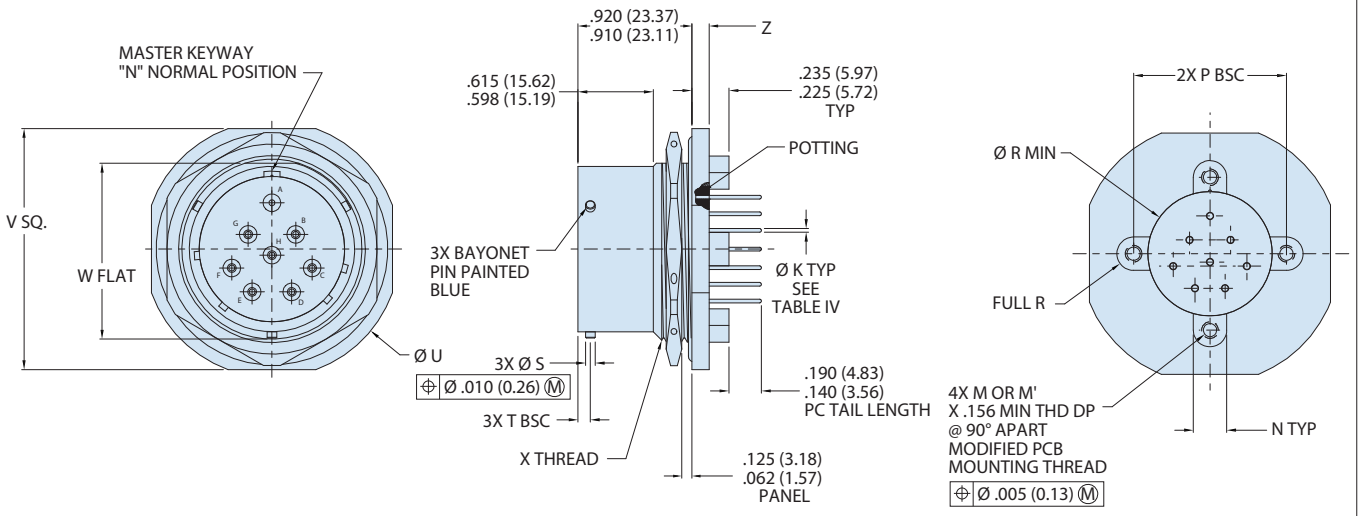

											Threads		Width
Size Code	Shell Size	P Bsc	ØR Min	ØS	T Bsc	ØU	V Sq.	W Flat	X Thread	Z	M	M′	N
A	9	0.594 (15.09)	0.340 (8.64)	.084 (2.13) .076 (1.93)	0.100 (2.54)	1.204 (30.58) 1.172 (29.77)	1.078 (27.38) 1.046 (26.57)	.655 (16.64) .645 (16.38)	.6875-24 UNEF-2A	.120 (3.05) .099 (2.51)	#4-40 UNC-2B	M3 X 0.5	0.150 (3.81)
B	11	0.719 (18.26)	0.468 (11.89)			1.391 (35.33) 1.359 (34.52)	1.266 (32.16) 1.234 (31.34)	.755 (19.18) .745 (18.92)	.8125-20 UNEF-2A				0.175 (4.45)
C	13	0.812 (20.62)	0.572 (14.53)			1.516 (38.51) 1.484 (37.69)	1.391 (35.33) 1.359 (34.52)	.942 (23.93) .932 (23.67)	1.0000-20 UNEF-2A				
D	15	0.906 (23.01)	0.705 (17.91)			1.641 (41.68) 1.609 (40.87)	1.516 (38.51) 1.484 (37.69)	1.066 (27.08) 1.056 (26.82)	1.1250-18 UNEF-2A				0.200 (5.08)
E	17	1.030 (26.16)	0.830 (21.08)			1.766 (44.86) 1.734 (44.04)	1.641 (41.68) 1.609 (40.87)	1.191 (30.25) 1.181 (30.00)	1.2500-18 UNEF-2A				
F	19	1.150 (29.21)	0.934 (23.72)			1.954 (49.63) 1.922 (48.82)	1.828 (46.43) 1.796 (45.62)	1.316 (33.43) 1.306 (33.17)	1.3750-18 UNEF-2A	.151 (3.84) .130 (3.30)			
G	21	1.221 (31.01)	1.055 (26.80)			2.078 (52.78) 2.046 (51.97)	1.954 (49.63) 1.922 (48.82)	1.441 (36.60) 1.431 (36.35)	1.5000-18 UNEF-2A				0.225 (5.72)
H	23	1.360 (34.54)	1.160 (29.46)			2.204 (55.98) 2.172 (55.17)	2.078 (52.78) 2.046 (51.97)	1.566 (39.78) 1.556 (39.52)	1.6250-18 UNEF-2A				
J	25	1.475 (37.47)	1.307 (33.20)	.131 (3.33) .123 (3.12)	0.109 (2.77)	2.328 (59.13) 2.296 (58.32)	2.204 (55.98) 2.172 (55.17)	1.691 (42.95) 1.681 (42.70)	1.7500-18 UNEF-2A				

© 2025 Glenair, Inc • 1211 Air Way, Glendale, CA 91201 • 818-247-6000 • www.glenair.com • U.S. CAGE code 06324 •
SuperNine MIL-DTL-38999 Series I Type · Dimensions in Inches (millimeters) are subject to change without notice.

MIL-DTL-38999 Series I Type
231-211 Dual-flange wall-mount receptacle

HOW TO ORDER

Sample Part Number	231-211	-CM	NF	23	-99	P	N

Basic Part Number	**231-211**
Connector Style	(See Table IV)
Material/Finish	**NF, MA, MT, ME, ZR, Z1, ZL, AB** (See Table V)
Shell Size	**9, 11, 13, 15, 17, 19, 21, 23, 25**
Insert Arrangement	PER MIL-STD-1560
Contact Style	**P** = Pin, PC Tail **S** = Socket, PC Tail
Alternate Polarization	**A, B, C, D, E, N** = Normal

"BETTER THAN QPL" FEATURES AND BENEFITS

- Improved, positive-lock, 3-point stainless-steel pin bayonet coupling with outstanding vibration and shock resistance
- Plug ground fingers for advanced EMC
- Glenair Signature tin zinc finish class is RoHS compliant and cadmium compatible
- Precision-machined key/keyway polarization for reliable mismating protection
- Expanded receptacle styles include Clinch-nut and Helicoil mounting, and In-Line configurations
- Scoop-proof design prevents pin damage and short circuits
- Fully tooled for all MIL-STD-1560 insert arrangements
- Contact options include size #22D, #20, #16, and #12 (see High-Speed series for Size #8)
- 500+ mating cycles exceeds MIL-DTL-38999 specification

POWER SPECIFICATIONS

- Max operating temperature is 200°C finish dependent
- Meets Mil-Spec service rating, insert dependent

TABLE II - MOUNTING HOLES

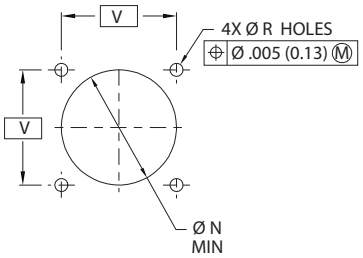

Shell Size Code	Shell Size	ØN Min	ØR Holes	V Bsc
A	9	0.656 (16.66)	.133 (3.38) .123 (3.12)	0.719 (18.26)
B	11	0.796 (20.22)		0.812 (20.62)
C	13	0.922 (23.42)		0.906 (23.01)
D	15	1.047 (26.59)		0.969 (24.61)
E	17	1.219 (30.96)		1.062 (26.97)
F	19	1.297 (32.94)		1.156 (29.36)
G	21	1.422 (36.12)		1.250 (31.75)
H	23	1.547 (39.29)	.159 (4.04) .149 (3.78)	1.375 (34.93)
J	25	1.672 (42.47)	.155 (3.94) .145 (3.68)	1.500 (38.10)

TABLE V - MATERIAL/FINISH

Sym	Material	Finish
NF	Aluminum Alloy	Cad/O.D. Over Electroless Nickel
MA		Electroless Nickel, Matte
ME		Electroless Nickel
MN		Tri-Nickel Alloy
MT		Nickel-PTFE
TZ		Tin Zinc Over Electroless Nickel
ZR		Zinc Ni, Black (Tri-Valent CR)
Z1	Stainless Steel (SST)	Passivate
ZL		Electrodeposited Nickel
AB	Marine Bronze (MB)	None (Clean Only)

TABLE IV - CONNECTOR STYLE

SYM	Description
CM	Receptacle, Wall-mount With Metric Clinch-nuts
CS	Receptacle, Wall-mount With Standard Clinch-nuts
D0	Receptacle, Wall-mount With Thru Holes
D1	Receptacle, Wall-mount With Thru Holes, Metric Stand-off thd.
HM	Receptacle, Wall-mount With Metric Helicoils
HS	Receptacle, Wall-mount With Standard Helicoils
T0	Receptacle, Wall-mount With Std Tapped Holes (MAT; SST & MB)
T1	Receptacle, Wall-mount With Mtc Tapped Holes (MAT; SST & MB)

TABLE III

Contact Size	PC Tail ØK
No 23	.020 (0.51) .018 (0.46)
No 22	.020 (0.51) .018 (0.46)
No 20	.030 (0.76) .028 (0.71)
No 16	.040 (1.02) .038 (0.97)
No 12	.072 (1.83) .070 (1.78)

© 2025 Glenair, Inc • 1211 Air Way, Glendale, CA 91201 • 818-247-6000 • www.glenair.com • U.S. CAGE code 06324 •

MIL-DTL-38999 Series I Type
231-211 Dual-flange wall-mount receptacle

CM - WALL-MOUNT RECEPTACLE

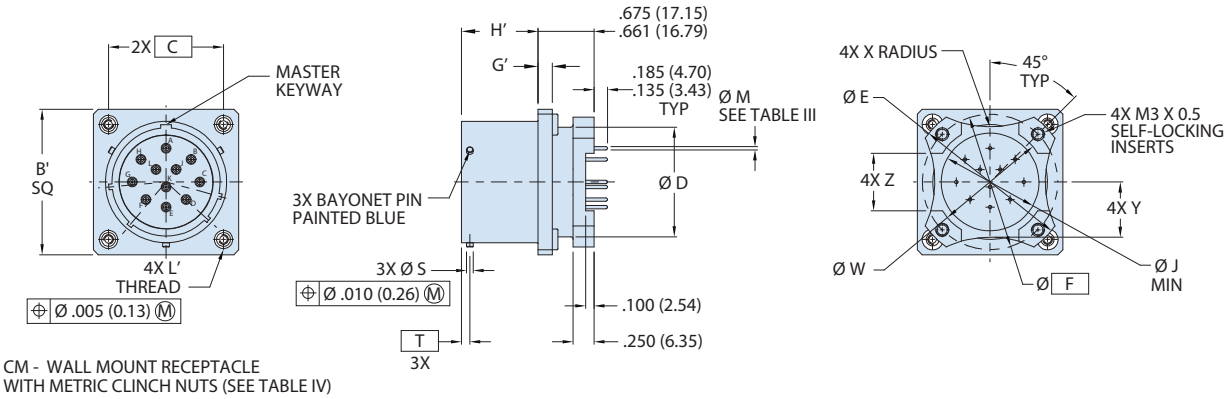

Shell Size Code	Shell Size	B Sq	B' Sq	C Bsc	G	G'	H	H'	ØJ Min	ØK	L Thread	L' Thread	ØS	T Bsc	ØD ±.005	ØE ±.005	ØF Bsc	ØW ±.005	X Rad ±.020	Y ±.020	Z ±.010
A	9	0.948 (24.08) 0.925 (23.50)	1.043 (26.49) 1.003 (25.48)	0.719 (18.26)	.103 (2.62) .077 (1.96)	.153 (3.89) .127 (3.23)	.952 (24.18) .928 (23.57)	.927 (23.55) .903 (22.94)	0.340 (8.64)	.136 (3.45) .120 (3.05)	.112-40 UNC	M3X0.5	.084 (2.13) .076 (1.93)	0.100 (2.54)	0.535 (13.59)	1.016 (25.81)	0.752 (19.10)	0.532 (13.51)	0.225 (5.72)	0.275 (6.99)	0.225 (5.72)
B	11	1.043 (26.49) 1.019 (25.88)	1.136 (28.85) 1.096 (27.84)	0.812 (20.62)					0.468 (11.89)						0.560 (14.22)	1.062 (26.97)	0.850 (21.59)	0.595 (15.11)	0.250 (6.35)	0.290 (7.37)	0.250 (6.35)
C	13	1.137 (28.88) 1.114 (28.30)	1.230 (31.24) 1.190 (30.23)	0.906 (23.01)					0.572 (14.53)						0.700 (17.78)	1.250 (31.75)	0.994 (25.25)	0.720 (18.29)	0.375 (9.53)	0.370 (9.40)	0.250 (6.35)
D	15	1.232 (31.29) 1.208 (30.68)	1.293 (32.84) 1.253 (31.83)	0.969 (24.61)					0.705 (17.91)						0.857 (21.77)	1.375 (34.93)	1.119 (28.42)	0.843 (21.41)	0.438 (11.13)	0.440 (11.18)	0.325 (8.26)
E	17	1.323 (33.60) 1.299 (32.99)	1.386 (35.20) 1.346 (34.19)	1.062 (26.97)					0.830 (21.08)						0.980 (24.89)	1.500 (38.10)	1.237 (31.42)	1.000 (25.40)	0.562 (14.27)	0.495 (12.57)	0.375 (9.53)
F	19	1.449 (36.80) 1.425 (36.20)	1.480 (37.59) 1.440 (36.58)	1.156 (29.36)					0.934 (23.72)						1.060 (26.92)	1.625 (41.28)	1.379 (35.03)	1.125 (28.58)	0.875 (22.23)	0.540 (13.72)	0.500 (12.70)
G	21	1.575 (40.01) 1.551 (39.40)	1.574 (39.98) 1.534 (38.96)	1.250 (31.75)	.133 (3.38) .107 (2.72)				1.055 (26.80)						1.210 (30.73)	1.750 (44.45)	1.489 (37.82)	1.240 (31.50)	1.170 (29.72)	0.625 (15.88)	0.562 (14.27)
H	23	1.701 (43.21) 1.677 (42.60)	1.759 (44.68) 1.719 (43.66)	1.375 (34.93)		.183 (4.65) .157 (3.99)			1.160 (29.46)	.162 (4.11) .146 (3.71)	.138-32 UNC	M4X0.7			1.310 (33.27)	1.875 (47.63)	1.619 (41.12)	1.328 (33.73)	1.250 (31.75)	0.660 (16.76)	0.688 (17.48)
J	25	1.823 (46.30) 1.799 (45.69)	1.884 (47.85) 1.844 (46.84)	1.500 (38.10)					1.307 (33.20)				.131 (3.33) .123 (3.12)	0.109 (2.77)	1.460 (37.08)	2.000 (50.80)	1.744 (44.30)	1.453 (36.91)	1.375 (34.93)	0.740 (18.80)	0.750 (19.05)

© 2025 Glenair, Inc • 1211 Air Way, Glendale, CA 91201 • 818-247-6000 • www.glenair.com • U.S. CAGE code 06324 •
SuperNine MIL-DTL-38999 Series I Type · Dimensions in Inches (millimeters) are subject to change without notice.

MIL-DTL-38999 Series I Type
231-211 Dual-flange wall-mount receptacle

CS - WALL-MOUNT RECEPTACLE

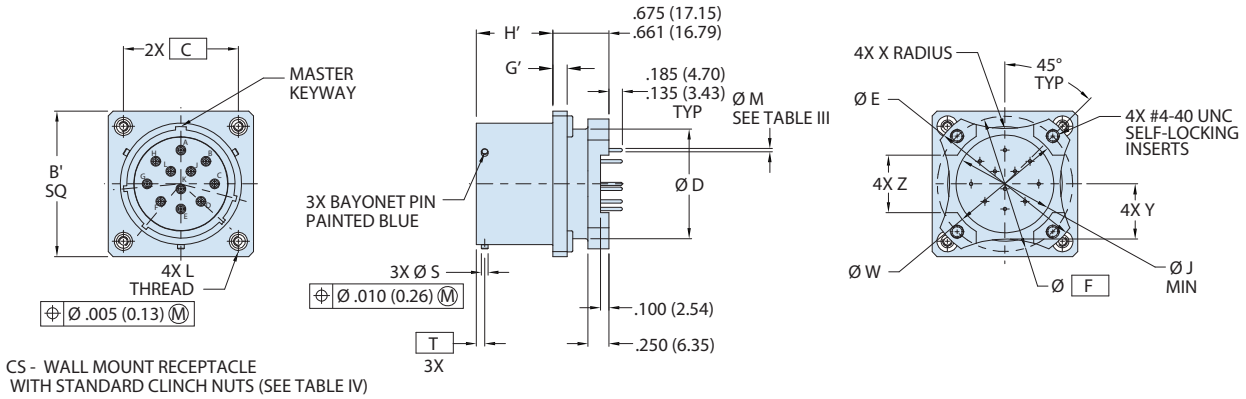

CS - WALL MOUNT RECEPTACLE
WITH STANDARD CLINCH NUTS (SEE TABLE IV)

D0/D1 - WALL-MOUNT RECEPTACLE

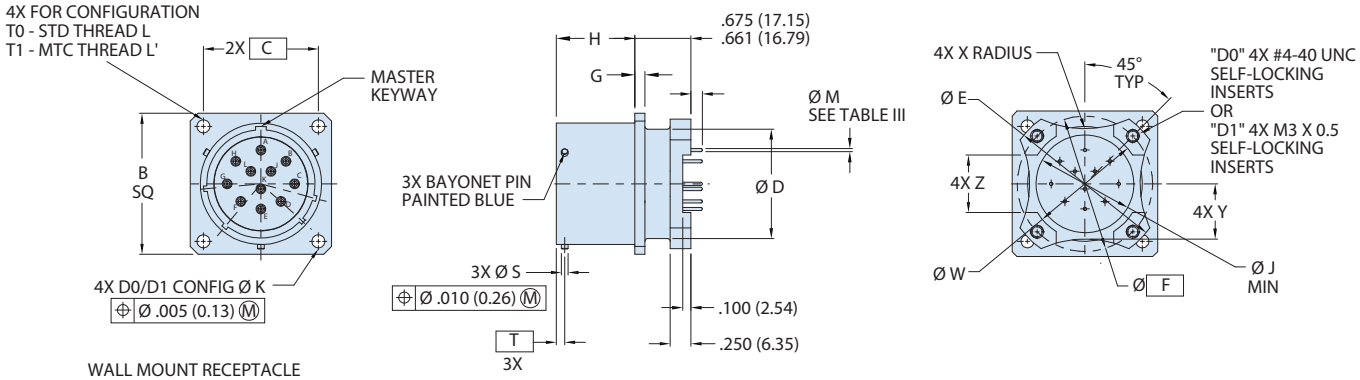

WALL MOUNT RECEPTACLE
D0 - WITH THRU HOLES, STANDARD SELF-LOCKING INSERT
D1 - WITH THRU HOLES, METRIC SELF-LOCKING INSERT
(SEE TABLE IV)

MIL-DTL-38999 Series I Type
231-211 Dual-flange wall-mount receptacle

HM - WALL-MOUNT RECEPTACLE

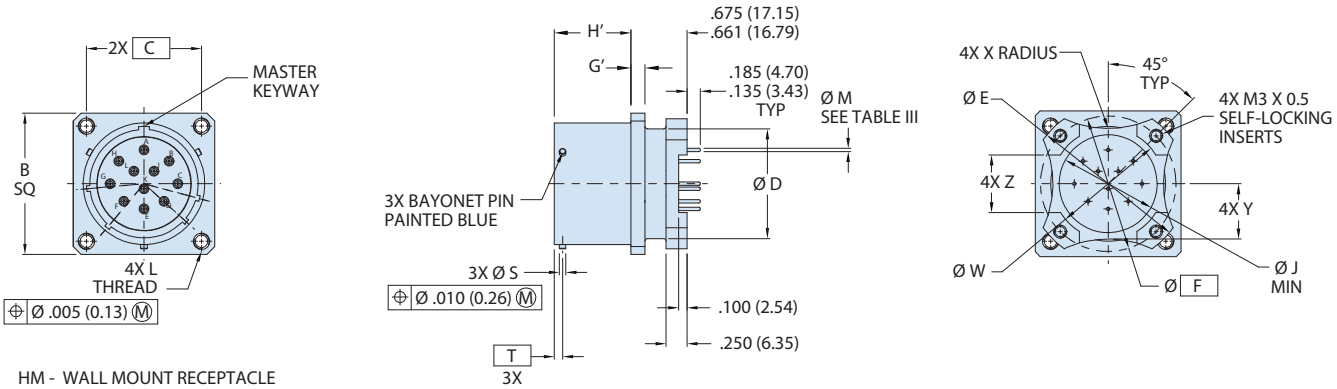

HM - WALL MOUNT RECEPTACLE
WITH METRIC HELICOILS (SEE TABLE IV)

HS - WALL-MOUNT RECEPTACLE

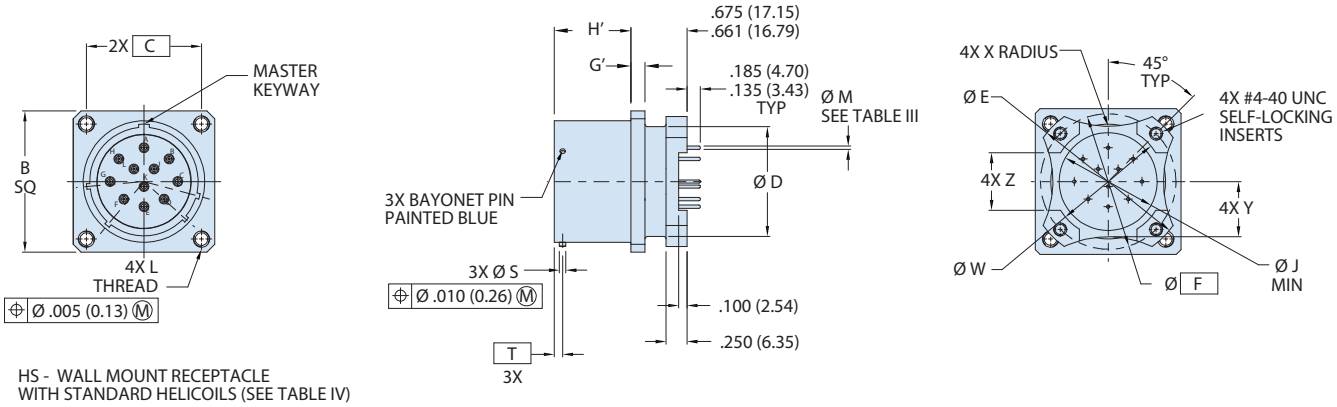

HS - WALL MOUNT RECEPTACLE
WITH STANDARD HELICOILS (SEE TABLE IV)

© 2025 Glenair, Inc • 1211 Air Way, Glendale, CA 91201 • 818-247-6000 • www.glenair.com • U.S. CAGE code 06324 •
SuperNine MIL-DTL-38999 Series I Type · Dimensions in Inches (millimeters) are subject to change without notice.

MIL-DTL-38999 Series I Type
231-211-07 Jam-nut mount dual flange receptacle

HOW TO ORDER							
Sample Part Number	231-211	-07	NF	17	-8	P	N

Basic Part Number	**231-211-07**
Connector Style	**07** = Receptacle, Jam-nut
Material/Finish	**NF**, **MA**, **MT**, **ME**, **ZR**, **Z1**, **ZL**, **AB** (See Table II)
Connector Size	**9**, **11**, **13**, **15**, **17**, **19**, **21**, **23**, **25**
Insert Arrangement	PER MIL-STD-1560
Contact Style	**P** = Pin, PC Tail **S** = Socket, PC Tail
Alternate Polarization	**A**, **B**, **C**, **D**, **N** = Normal

ENVIRONMENTAL CONNECTORS

"BETTER THAN QPL" FEATURES AND BENEFITS

- Improved, positive-lock, 3-point stainless-steel pin bayonet coupling with outstanding vibration and shock resistance
- Plug ground fingers for advanced EMC
- Glenair Signature tin zinc finish class is RoHS compliant and cadmium compatible
- Precision-machined key/keyway polarization for reliable mismating protection
- Expanded receptacle styles include Clinch-nut and Helicoil mounting, and In-Line configurations
- Scoop-proof design prevents pin damage and short circuits
- Fully tooled for all MIL-STD-1560 insert arrangements
- Contact options include size #22D, #20, #16, and #12 (see High-Speed series for Size #8)
- 500+ mating cycles exceeds MIL-DTL-38999 specification

POWER SPECIFICATIONS

- Max operating temperature is 200°C finish dependent
- Meets Mil-Spec service rating, insert dependent

TABLE III - PANEL-MOUNT

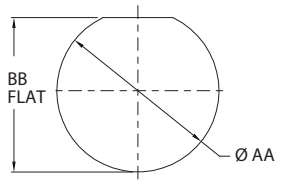

RECOMMENDED PANEL CUT-OUT

Size Code	Shell Size	ØAA	BB FLAT
A	9	.703 (17.86) .693 (17.60)	.661 (16.79) .654 (16.61)
B	11	.835 (21.21) .825 (20.96)	.771 (19.58) .761 (19.33)
C	13	1.020 (25.91) 1.010 (25.65)	.955 (24.26) .945 (24.00)
D	15	1.145 (29.08) 1.135 (28.83)	1.085 (27.56) 1.075 (27.31)
E	17	1.270 (32.26) 1.260 (32.00)	1.210 (30.73) 1.200 (30.48)
F	19	1.395 (35.43) 1.385 (35.18)	1.335 (33.91) 1.325 (33.66)
G	21	1.520 (38.61) 1.510 (38.35)	1.460 (37.08) 1.450 (36.83)
H	23	1.645 (41.78) 1.635 (41.53)	1.585 (40.26) 1.575 (40.01)
J	25	1.770 (44.96) 1.760 (44.70)	1.710 (43.43) 1.700 (43.18)

TABLE II - MATERIAL/FINISH

Sym	Material	Finish
NF	Aluminum Alloy	Cad/O.D. Over Electroless Nickel
MA		Electroless Nickel, Matte
ME		Electroless Nickel
MN		Tri-Nickel Alloy
MT		Nickel-PTFE
TZ		Tin Zinc Over Electroless Nickel
ZR		Zinc Ni, Black (Tri-Valent CR)
Z1	Stainless Steel (SST)	Passivate
ZL		Electrodeposited Nickel
AB	Marine Bronze (MB)	None (Clean Only)

TABLE V

Contact Size	PC Tail ØK
No 23	.020 (0.51) .018 (0.46)
No 22	.020 (0.51) .018 (0.46)
No 20	.030 (0.76) .028 (0.71)
No 16	.040 (1.02) .038 (0.97)
No 12	.072 (1.83) .070 (1.78)

© 2025 Glenair, Inc • 1211 Air Way, Glendale, CA 91201 • 818-247-6000 • www.glenair.com • U.S. CAGE code 06324 •

MIL-DTL-38999 Series I Type
231-211-07 Jam-nut mount dual flange receptacle

TABLE II

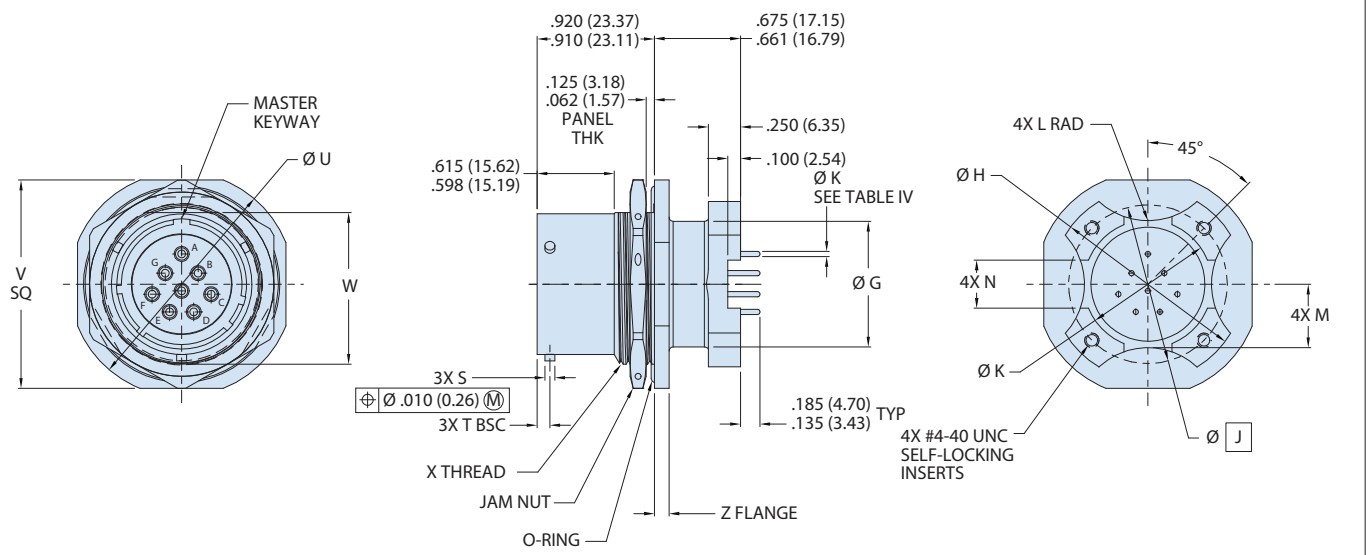

Shell Size Code	Shell Size	Ø S	Ø T Bsc	Ø U	V Sq	W Flat	X Thread	Z	ØG ±.005	ØH ±.005	ØJ Bsc	ØK ±.005	L Rad ±.020	M ±.020	N ±.010
A	9	0.084 (2.13) 0.076 (1.93)	0.100 (2.54)	1.204 (30.58) 1.172 (29.77)	1.078 (27.38) 1.046 (26.57)	0.655 (16.64) 0.645 (16.38)	.6875-24 UNEF-2A	.120 (3.05) .099 (2.51)	0.535 (13.59)	1.016 (25.81)	0.752 (19.10)	0.532 (13.51)	0.225 (5.72)	0.275 (6.99)	0.225 (5.72)
B	11			1.391 (35.33) 1.359 (34.52)	1.266 (32.16) 1.234 (31.34)	0.755 (19.18) 0.745 (18.92)	.8125-20 UNEF-2A		0.560 (14.22)	1.062 (26.97)	0.850 (21.59)	0.595 (15.11)	0.250 (6.35)	0.290 (7.37)	0.250 (6.35)
C	13			1.516 (38.51) 1.484 (37.69)	1.391 (35.33) 1.359 (34.52)	0.942 (23.93) 0.932 (23.67)	1.0000-20 UNEF-2A		0.700 (17.78)	1.250 (31.75)	0.994 (25.25)	0.720 (18.29)	0.375 (9.53)	0.370 (9.40)	0.250 (6.35)
D	15			1.641 (41.68) 1.609 (40.87)	1.516 (38.51) 1.484 (37.69)	1.066 (27.08) 1.056 (26.82)	1.1250-18 UNEF-2A		0.857 (21.77)	1.375 (34.93)	1.119 (28.42)	0.843 (21.41)	0.438 (11.13)	0.440 (11.18)	0.325 (8.26)
E	17			1.766 (44.86) 1.734 (44.04)	1.641 (41.68) 1.609 (40.87)	1.191 (30.25) 1.181 (30.00)	1.2500-18 UNEF-2A		0.980 (24.89)	1.500 (38.10)	1.237 (31.42)	1.000 (25.40)	0.562 (14.27)	0.495 (12.57)	0.375 (9.53)
F	19			1.954 (49.63) 1.922 (48.82)	1.828 (46.43) 1.796 (45.62)	1.316 (33.43) 1.306 (33.17)	1.3750-18 UNEF-2A	.151 (3.84) .130 (3.30)	1.060 (26.92)	1.625 (41.28)	1.379 (35.03)	1.125 (28.58)	0.875 (22.23)	0.540 (13.72)	0.500 (12.70)
G	21			2.078 (52.78) 2.046 (51.97)	1.954 (49.63) 1.922 (48.82)	1.441 (36.60) 1.431 (36.35)	1.5000-18 UNEF-2A		1.210 (30.73)	1.750 (44.45)	1.489 (37.82)	1.240 (31.50)	1.170 (29.72)	0.625 (15.88)	0.562 (14.27)
H	23			2.204 (55.98) 2.172 (55.17)	2.078 (52.78) 2.046 (51.97)	1.566 (39.78) 1.556 (39.52)	1.6250-18 UNEF-2A		1.310 (33.27)	1.875 (47.63)	1.619 (41.12)	1.328 (33.73)	1.250 (31.75)	0.660 (16.76)	0.688 (17.48)
J	25	0.131 (3.33) 0.123 (3.12)	0.109 (2.77)	2.328 (59.13) 2.296 (58.32)	2.204 (55.98) 2.172 (55.17)	1.691 (42.95) 1.681 (42.70)	1.7500-18 UNEF-2A		1.460 (37.08)	2.000 (50.80)	1.744 (44.30)	1.453 (36.91)	1.375 (34.93)	0.740 (18.80)	0.750 (19.05)

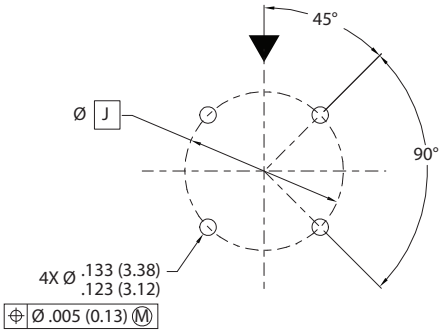

RECOMMENDED PCB MOUNTING HOLE LOCATIONS

© 2025 Glenair, Inc • 1211 Air Way, Glendale, CA 91201 • 818-247-6000 • www.glenair.com • U.S. CAGE code 06324 •
SuperNine MIL-DTL-38999 Series I Type · Dimensions in Inches (millimeters) are subject to change without notice.

MIL-DTL-38999 Series I Type
231-212 Wall-mount feedthru receptacle connector

HOW TO ORDER

Sample Part Number	231-212	-D0	NF	17	-8	P	N	S	N	-01

Basic Part Number	**231-212**
Connector Style	(See Table IV)
Material/Finish	(See Table V)
Shell Size	**9**, **11**, **13**, **15**, **17**, **19**, **21**, **23**, **25**
Insert Arrangement	PER MIL-STD-1560
Contact Style (Panel Side)	**P** = Pin, Gold, 500 Cycles **S** = Socket, Gold, 500 Cycles
Alternate Polarization	**A**, **B**, **C**, **D**, **E**, **N** = Normal, **U** = Universal
Contact Style (Flange Side)	**P** = Pin, Gold, 500 Cycles **S** = Socket, Gold, 500 Cycles
Alternate Polarization	**A**, **B**, **C**, **D**, **E**, **N** = Normal, **U** = Universal
Panel Accommodation	(See Table III)

"BETTER THAN QPL" FEATURES AND BENEFITS

- Improved, positive-lock, 3-point stainless-steel pin bayonet coupling with outstanding vibration and shock resistance
- Plug ground fingers for advanced EMC
- Glenair Signature tin zinc finish class is RoHS compliant and cadmium compatible
- Precision-machined key/keyway polarization for reliable mismating protection
- Expanded receptacle styles include Clinch-nut and Helicoil mounting, and In-Line configurations
- Scoop-proof design prevents pin damage and short circuits
- Fully tooled for all MIL-STD-1560 insert arrangements
- Contact options include size #22D, #20, #16, and #12 (see High-Speed series for Size #8)
- 500+ mating cycles exceeds MIL-DTL-38999 specification

POWER SPECIFICATIONS

- Max operating temperature is 200°C finish dependent
- Meets Mil-Spec service rating, insert dependent

TABLE II - MOUNTING HOLES

Shell Size	Ø L Min	Ø M Holes	N Bsc
9	0.656 (16.66)	.133 (3.38) / .123 (3.12)	0.719 (18.26)
11	0.796 (20.22)		0.812 (20.62)
13	0.922 (23.42)		0.906 (23.01)
15	1.047 (26.59)		0.969 (24.61)
17	1.219 (30.96)		1.062 (26.97)
19	1.297 (32.94)		1.156 (29.36)
21	1.422 (36.12)		1.250 (31.75)
23	1.547 (39.29)	.159 (4.04) / .149 (3.78)	1.375 (34.93)
25	1.672 (42.47)	.155 (3.94) / .145 (3.68)	1.500 (38.10)

TABLE III - PANEL ACCOMMODATION

Sym	Panel Thickness	H Max
01	.250 (6.35) .062 (1.57)	1.83 (46.48)
02	.500 (12.70) .062 (1.57)	2.08 (52.83)

TABLE IV - CONNECTOR STYLE

SYM	Description
CM	Receptacle, Wall-mount With Metric Clinch-nuts
CS	Receptacle, Wall-mount With Standard Clinch-nuts
D0	Receptacle, Wall-mount With Thru Holes
HM	Receptacle, Wall-mount With Metric Helicoils
HS	Receptacle, Wall-mount With Standard Helicoils
T0	Receptacle, Wall-mount With Std Tapped Holes (MAT; SST & MB)
T1	Receptacle, Wall-mount With Mtc Tapped Holes (MAT; SST & MB)

TABLE V - MATERIAL/FINISH

Sym	Material	Finish
NF	Aluminum Alloy	Cad/O.D. Over Electroless Nickel
MA		Electroless Nickel, Matte
ME		Electroless Nickel
MN		Tri-Nickel Alloy
MT		Nickel-PTFE
TZ		Tin Zinc Over Electroless Nickel
ZN		Zinc-Nickel Olive Drab
ZR		Zinc Ni, Black (Tri-Valent Cr)
TD	Titanium (Td)	Natural - No Plate
Z1	Stainless Steel (SST)	Passivate
ZL		Electrodeposited Nickel
AB	Marine Bronze (MB)	None (Clean Only)

© 2025 Glenair, Inc • 1211 Air Way, Glendale, CA 91201 • 818-247-6000 • www.glenair.com • U.S. CAGE code 06324 •

MIL-DTL-38999 Series I Type
231-212 Wall-mount feedthru receptacle connector

D0- WALL-MOUNT RECEPTACLE

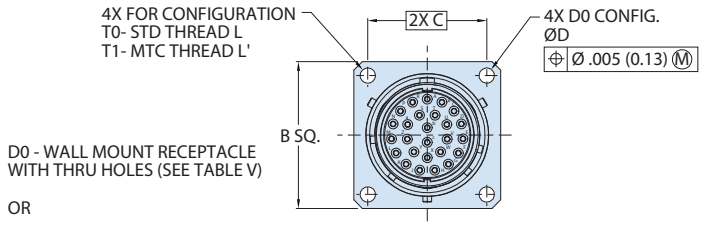

D0 - WALL MOUNT RECEPTACLE
WITH THRU HOLES (SEE TABLE V)

OR

T0 - WALL MOUNT RECEPTACLE WITH STD TAPPED HOLES
T1 - WALL MOUNT RECEPTACLE WITH MTC TAPPED HOLES
(MAT; TITANIUM, STAINLESS STEEL AND MARINE BRONZE)
(SEE TABLE V)

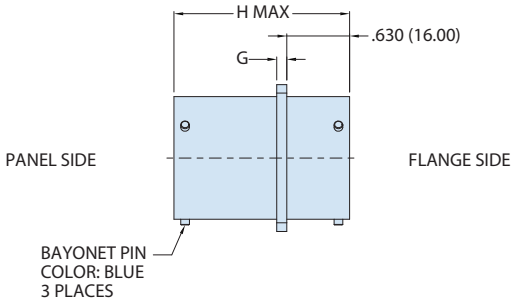

CM- WALL-MOUNT RECEPTACLE

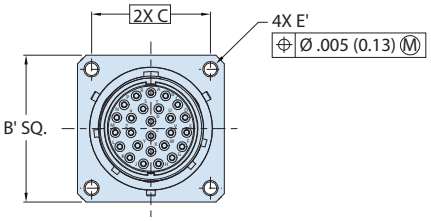

CM - WALL MOUNT RECEPTACLE
WITH METRIC CLINCH NUTS (SEE TABLE V)

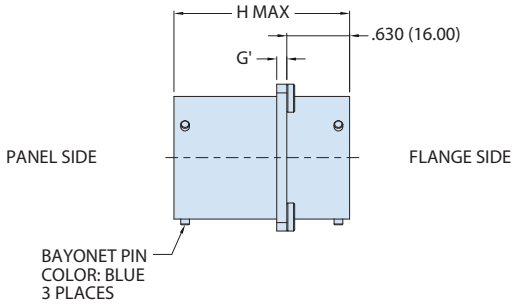

TABLE I

Shell Size	B Sq	B' Sq	C Bsc	D Holes	E Thread	E' Thread	G	G'
9	0.948 0.925	1.043 1.003	0.719	.138 .123	.112-40 UNC-3B	M3X0.5	.100 .085	.179 .140
11	1.043 1.019	1.136 1.096	0.812					
13	1.137 1.114	1.230 1.190	0.906					
15	1.232 1.208	1.293 1.253	0.969					
17	1.323 1.299	1.386 1.346	1.062					
19	1.449 1.425	1.480 1.440	1.156					
21	1.575 1.551	1.574 1.534	1.250				.130 .115	.190 .170
23	1.701 1.677	1.759 1.719	1.375	.157 .142	.138-32 UNC-3B	M4X0.7		
25	1.823 1.799	1.884 1.844	1.500					

© 2025 Glenair, Inc • 1211 Air Way, Glendale, CA 91201 • 818-247-6000 • www.glenair.com • U.S. CAGE code 06324 •
SuperNine MIL-DTL-38999 Series I Type · Dimensions in Inches (millimeters) are subject to change without notice.

MIL-DTL-38999 Series I Type
231-212 Wall-mount feedthru receptacle connector

CS- WALL-MOUNT RECEPTACLE

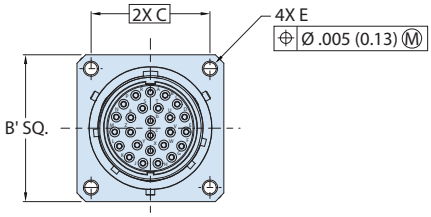

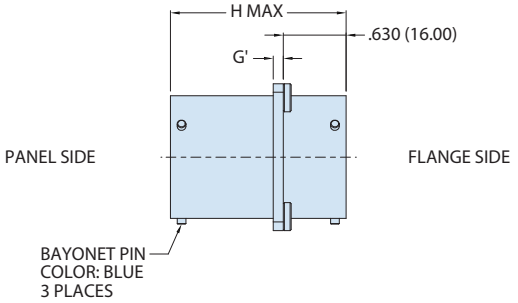

CS - WALL MOUNT RECEPTACLE
WITH STANDARD CLINCH NUTS (SEE TABLE V)

HM- WALL-MOUNT RECEPTACLE

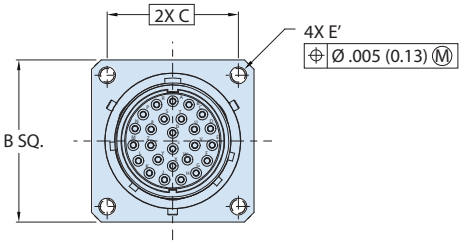

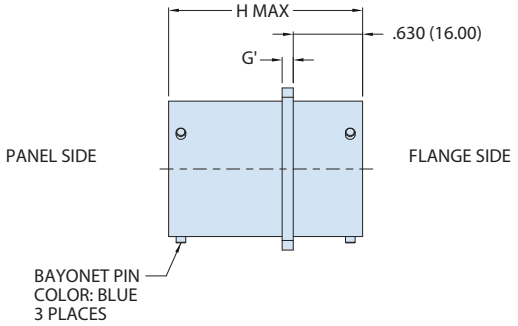

HM - WALL MOUNT RECEPTACLE
WITH METRIC HELICOILS (SEE TABLE V)

HS- WALL-MOUNT RECEPTACLE

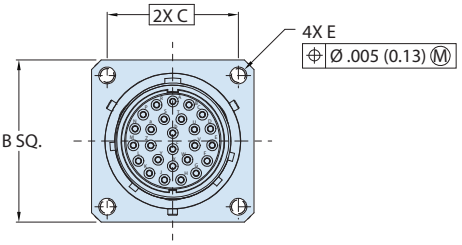

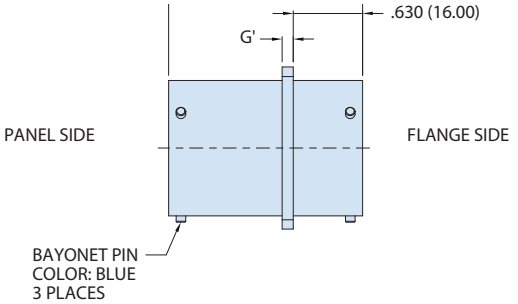

HS - WALL MOUNT RECEPTACLE
WITH STANDARD HELICOIL (SEE TABLE V)

RECOMMENDED MOUNTING HOLES

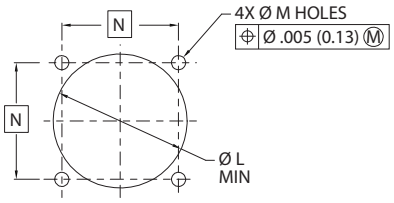

RECOMMENDED MOUNTING HOLES
FOR WALL MOUNT RECEPTACLES

MIL-DTL-38999 Series I Type
231-213 Sav-Con® connector saver, plug-to-receptacle interface

HOW TO ORDER

Sample Part Number	231-213	-NF	17	-8	P	N	S	N

Basic Part Number	**231-213**
Material/Finish	(See Table I)
Connector Size	**9**, **11**, **13**, **15**, **17**, **19**, **21**, **23**, **25**
Insert Arrangement	PER MIL-STD-1560
Contact Style (Plug Side)	**P** = Pin, Gold, 500 Cycles **S** = Socket, Gold, 500 Cycles
Alternate Polarization	**A**, **B**, **C**, **D**, **E**, **N** = Normal, **U** = Universal
Contact Style (Receptacle Side)	**P** = Pin, Gold, 500 Cycles **S** = Socket, Gold, 500 Cycles
Alternate Polarization	**A**, **B**, **C**, **D**, **E**, **N** = Normal, **U** = Universal

231-213

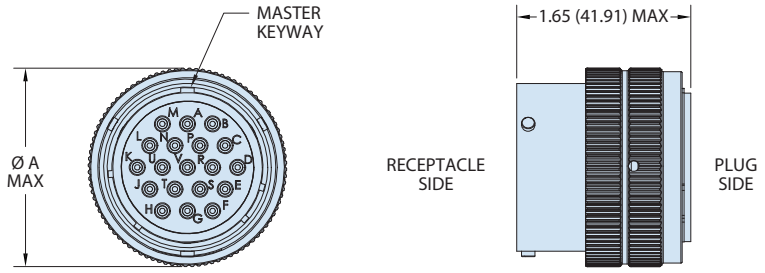

"BETTER THAN QPL" FEATURES AND BENEFITS

- Improved, positive-lock, 3-point stainless-steel pin bayonet coupling with outstanding vibration and shock resistance
- Plug ground fingers for advanced EMC
- Glenair Signature tin zinc finish class is RoHS compliant and cadmium compatible
- Precision-machined key/keyway polarization for reliable mismating protection
- Expanded receptacle styles include Clinch-nut and Helicoil mounting, and In-Line configurations
- Scoop-proof design prevents pin damage and short circuits
- Fully tooled for all MIL-STD-1560 insert arrangements
- Contact options include size #22D, #20, #16, and #12 (see High-Speed series for Size #8)
- 500+ mating cycles exceeds MIL-DTL-38999 specification

TABLE II

Shell Size	Ø A Max
9	0.859 (21.82)
11	0.984 (24.99)
13	1.156 (29.36)
15	1.281 (32.54)
17	1.406 (35.71)
19	1.516 (38.51)
21	1.641 (41.68)
23	1.766 (44.86)
25	1.891 (48.03)

POWER SPECIFICATIONS

- Max operating temperature is 200°C finish dependent
- Meets Mil-Spec service rating, insert dependent

TABLE I - MATERIAL/FINISH

Sym	Material	Finish
NF	Aluminum Alloy	Cad/O.D. Over Electroless Nickel
MA		Electroless Nickel, Matte
ME		Electroless Nickel
MN		Tri-Nickel Alloy
MT		Nickel-PTFE
TZ		Tin Zinc Over Electroless Nickel
ZN		Zinc-Nickel Olive Drab
ZR		Zinc Ni, Black (Tri-Valent Cr)
TD	Titanium (Td)	Natural - No Plate
Z1	Stainless Steel (SST)	Passivate
ZL		Electrodeposited Nickel
AB	Marine Bronze (MB)	None (Clean Only)

© 2025 Glenair, Inc • 1211 Air Way, Glendale, CA 91201 • 818-247-6000 • www.glenair.com • U.S. CAGE code 06324 •
SuperNine MIL-DTL-38999 Series I Type · Dimensions in Inches (millimeters) are subject to change without notice.

MIL-DTL-38999 Series I Type
231-214 Sav-Con® connector saver, plug-to-plug interface

HOW TO ORDER

Sample Part Number	231-214	-NF	17	-8	P	N	S	N

Basic Part Number	**231-214**
Material/Finish	(See Table I)
Connector Size	**9**, **11**, **13**, **15**, **17**, **19**, **21**, **23**, **25**
Insert Arrangement	PER MIL-STD-1560
Contact Style (Plug Side)	**P** = Pin, Gold, 500 Cycles **S** = Socket, Gold, 500 Cycles
Alternate Polarization	**A**, **B**, **C**, **D**, **E**, **N** = Normal, **U** = Universal
Contact Style (Receptacle Side)	**P** = Pin, Gold, 500 Cycles **S** = Socket, Gold, 500 Cycles
Alternate Polarization	**A**, **B**, **C**, **D**, **E**, **N** = Normal, **U** = Universal

231-214

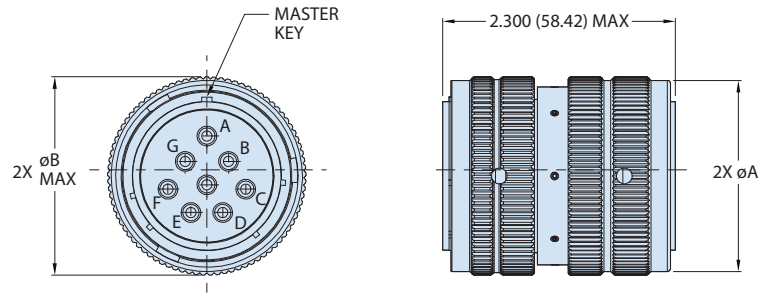

"BETTER THAN QPL" FEATURES AND BENEFITS

- Improved, positive-lock, 3-point stainless-steel pin bayonet coupling with outstanding vibration and shock resistance
- Plug ground fingers for advanced EMC
- Glenair Signature tin zinc finish class is RoHS compliant and cadmium compatible
- Precision-machined key/keyway polarization for reliable mismating protection
- Expanded receptacle styles include Clinch-nut and Helicoil mounting, and In-Line configurations
- Scoop-proof design prevents pin damage and short circuits
- Fully tooled for all MIL-STD-1560 insert arrangements
- Contact options include size #22D, #20, #16, and #12 (see High-Speed series for Size #8)
- 500+ mating cycles exceeds MIL-DTL-38999 specification

POWER SPECIFICATIONS

- Max operating temperature is 200°C finish dependent
- Meets Mil-Spec service rating, insert dependent

TABLE II - PLUG

Shell Size Code	Shell Size	ØA	ØB Max
A	9	.791 (20.09) .780 (19.81)	0.859 (21.82)
B	11	.916 (23.27) .905 (22.99)	0.984 (24.99)
C	13	1.072 (27.23) 1.061 (26.95)	1.156 (29.36)
D	15	1.197 (30.40) 1.186 (30.12)	1.281 (32.54)
E	17	1.312 (33.32) 1.301 (33.05)	1.406 (35.71)
F	19	1.433 (36.40) 1.422 (36.12)	1.516 (38.51)
G	21	1.555 (39.50) 1.544 (39.22)	1.641 (41.68)
H	23	1.678 (42.62) 1.667 (42.34)	1.766 (44.86)
J	25	1.804 (45.82) 1.793 (45.54)	1.891 (48.03)

TABLE I - MATERIAL/FINISH

Sym	Material	Finish
NF	Aluminum Alloy	Cad/O.D. Over Electroless Nickel
MA		Electroless Nickel, Matte
ME		Electroless Nickel
MN		Tri-Nickel Alloy
MT		Nickel-PTFE
TZ		Tin Zinc Over Electroless Nickel
ZR		Zinc Ni, Black (Tri-Valent Cr)

© 2025 Glenair, Inc • 1211 Air Way, Glendale, CA 91201 • 818-247-6000 • www.glenair.com • U.S. CAGE code 06324 •

MIL-DTL-38999 Series I Type
250-101 Shorting connectors, plug and receptacle

HOW TO ORDER

Sample Part Number	250-101	-G6	NF	17	-35	P	N

Basic Part Number	**250-101**
Connector Style	**G6** = Plug Connector **D0** = Wall-mount Thru Hole **07** = Receptacle, Jam-nut
Material/Finish	**NF**, **MA**, **MT**, **ME**, **ZR** (See Table I)
Shell Size	**9**, **11**, **13**, **15**, **17**, **19**, **21**, **23**, **25**
Insert Arrangement	PER MIL-STD-1560
Contact Style	**P** = Pin Contacts **S** = Socket Contacts
Alternate Polarization	**N** = Normal, **A**, **B**, **C**, **D**, **K**, **L**, **M**, **R** **U** = Universal

"BETTER THAN QPL" FEATURES AND BENEFITS

- Improved, positive-lock, 3-point stainless-steel pin bayonet coupling with outstanding vibration and shock resistance
- Plug ground fingers for advanced EMC
- Glenair Signature tin zinc finish class is RoHS compliant and cadmium compatible
- Precision-machined key/keyway polarization for reliable mismating protection
- Expanded receptacle styles include Clinch-nut and Helicoil mounting, and In-Line configurations
- Scoop-proof design prevents pin damage and short circuits
- Fully tooled for all MIL-STD-1560 insert arrangements
- Contact options include size #22D, #20, #16, and #12 (see High-Speed series for Size #8)
- 500+ mating cycles exceeds MIL-DTL-38999 specification

TABLE II - PLUG

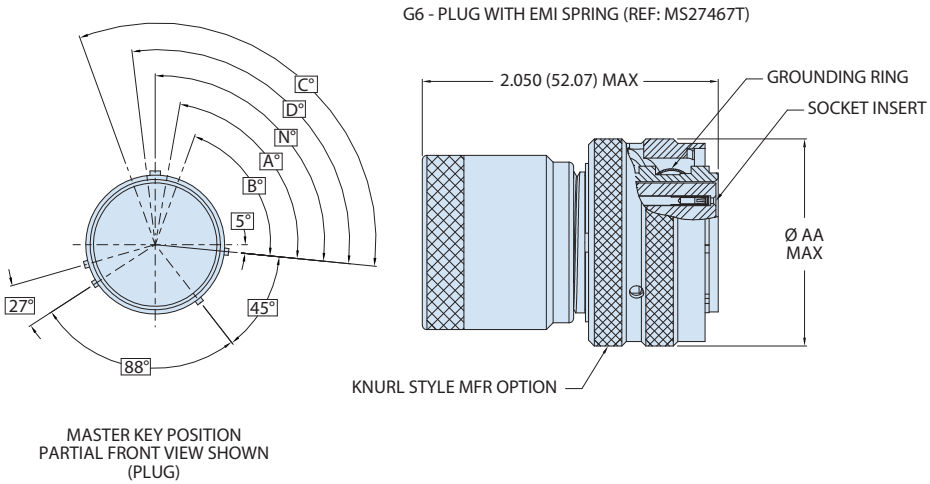

MASTER KEY POSITION
PARTIAL FRONT VIEW SHOWN
(PLUG)

Shell Size	ØAA Max	Alternate Keyway Positions				
		N°	A°	B°	C°	D°
9	0.859	95°	77°	-	-	113°
11	0.984	95°	81°	67°	123°	109°
13	1.156	95°	75°	63°	127°	115°
15	1.281	95°	74°	61°	129°	116°
17	1.406	95°	77°	65°	125°	113°
19	1.516	95°	77°	65°	125°	113°
21	1.641	95°	77°	65°	125°	113°
23	1.766	95°	80°	69°	121°	110°
25	1.891	95°	80°	69°	121°	110°

© 2025 Glenair, Inc • 1211 Air Way, Glendale, CA 91201 • 818-247-6000 • www.glenair.com • U.S. CAGE code 06324 •
SuperNine MIL-DTL-38999 Series I Type · Dimensions in Inches (millimeters) are subject to change without notice.

MIL-DTL-38999 Series I Type
250-101 Shorting connectors, plug and receptacle

TABLE III - Wall-mount

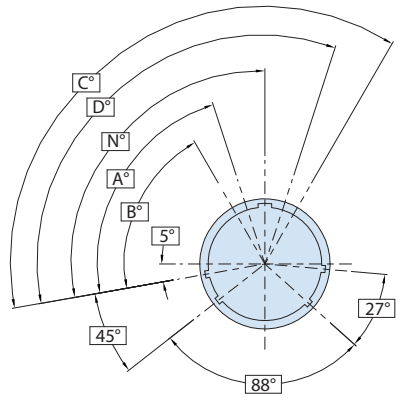

MASTER KEYWAY POSITION
PARTIAL FRONT VIEW SHOWN
(RECEPTACLE)

D0 - WALL MOUNT FRONT PANEL RECEPTACLE
WITH STANDARD HOLES (REF: MS27466T)

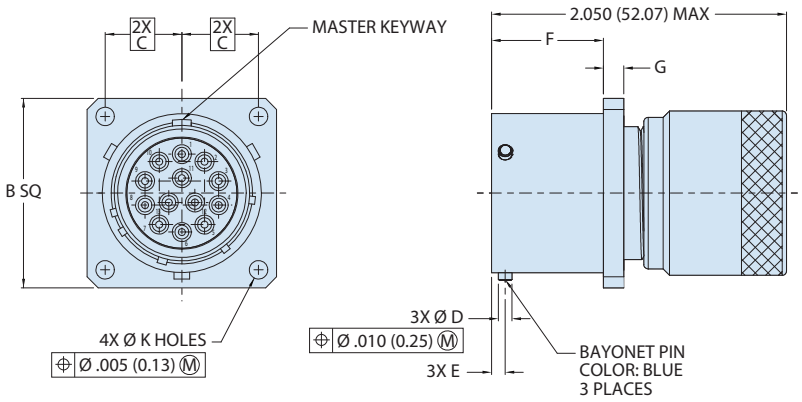

Shell Size Code	Shell Size	B Sq	C Bsc	F	G	ØK Holes	ØD	E Bsc
A	9	0.958 (24.33) 0.918 (23.32)	0.360 (9.14)	.632 (16.05) .627 (15.93)	.100 (2.54) .085 (2.16)	.138 (3.51) .123 (3.12)	.084 (2.13) .076 (1.93)	0.100 (2.54)
B	11	1.051 (26.70) 1.011 (25.68)	0.406 (10.31)					
C	13	1.145 (29.08) 1.105 (28.07)	0.453 (11.51)					
D	15	1.239 (31.47) 1.199 (30.45)	0.485 (12.32)					
E	17	1.332 (33.83) 1.292 (32.82)	0.531 (13.49)					
F	19	1.458 (37.03) 1.418 (36.02)	0.578 (14.68)					
G	21	1.582 (40.18) 1.542 (39.17)	0.625 (15.88)	.602 (15.29) .597 (15.16)	.130 (3.30) .115 (2.92)			
H	23	1.708 (43.38) 1.668 (42.37)	0.688 (17.48)			0.157 (3.99)		
J	25	1.832 (46.53) 1.792 (45.52)	0.750 (19.05)			0.142 (3.61)	.131 (3.33) .123 (3.12)	0.109 (2.77)

TABLE I: MATERIAL/FINISH

Sym	Material	Finish
NF	Aluminum Alloy	Cad/O.D. Over Electroless Nickel
MA		Electroless Nickel, Matte
ME		Electroless Nickel
MN		Tri-Nickel Alloy
MT		Nickel-PTFE
TZ		Tin Zinc Over Electroless Nickel
ZR		Zinc Ni, Black (Tri-Valent CR)

TABLE IV

SHELL SIZE	ALTERNATE KEYWAY POSITIONS				
	N°	A°	B°	C°	D°
9	95°	77°	-	-	113°
11	95°	81°	67°	123°	109°
13	95°	75°	63°	127°	115°
15	95°	74°	61°	129°	116°
17	95°	77°	65°	125°	113°
19	95°	77°	65°	125°	113°
21	95°	77°	65°	125°	113°
23	95°	80°	69°	121°	110°
25	95°	80°	69°	121°	110°

© 2025 Glenair, Inc • 1211 Air Way, Glendale, CA 91201 • 818-247-6000 • www.glenair.com • U.S. CAGE code 06324 •
SuperNine MIL-DTL-38999 Series I Type · Dimensions in Inches (millimeters) are subject to change without notice.

MIL-DTL-38999 Series I Type
250-101 Shorting connectors, plug and receptacle

TABLE V - Jam-nut

07 - JAM NUT MOUNT RECEPTACLE (REF: MS27468T)

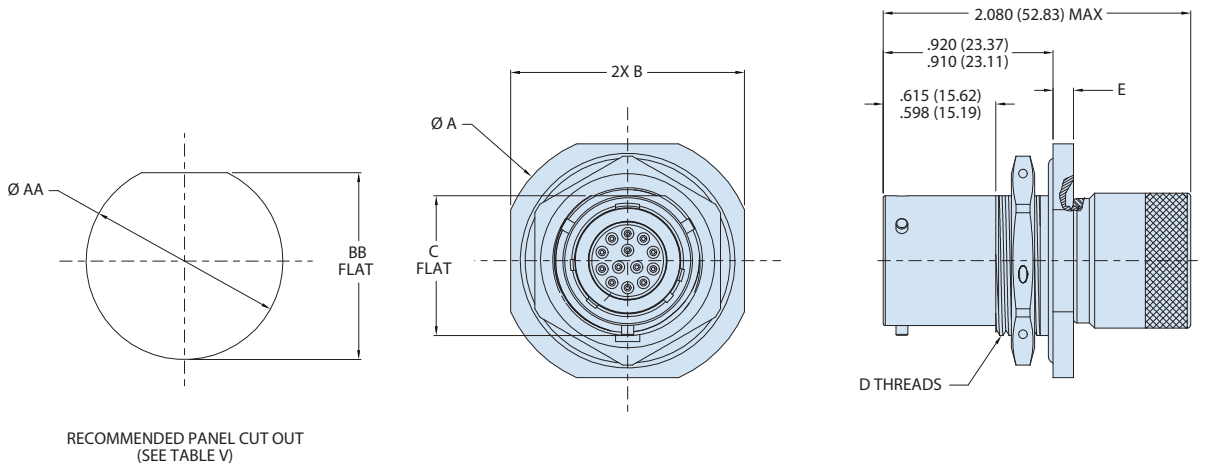

Shell Size Code	Shell Size	Ø A ±.016	B ±.016	C Flat	D Thread Class 2A UNEF	E	Ø AA	BB Flat
A	9	1.188 (30.18)	1.062 (26.97)	0.655 (16.64) 0.645 (16.38)	.6875-24	.120 (3.05) .099 (2.51)	0.703 (17.86) 0.693 (17.60)	0.661 (16.79) 0.654 (16.61)
B	11	1.375 (34.93)	1.250 (31.75)	0.755 (19.18) 0.745 (18.92)	.8125-20		0.835 (21.21) 0.825 (20.96)	0.771 (19.58) 0.761 (19.33)
C	13	1.500 (38.10)	1.375 (34.93)	0.942 (23.93) 0.932 (23.67)	1.0000-20		1.020 (25.91) 1.010 (25.65)	0.955 (24.26) 0.945 (24.00)
D	15	1.625 (41.28)	1.500 (38.10)	1.066 (27.08) 1.056 (26.82)	1.1250-18		1.145 (29.08) 1.135 (28.83)	1.085 (27.56) 1.075 (27.31)
E	17	1.750 (44.45)	1.625 (41.28)	1.191 (30.25) 1.181 (30.00)	1.2500-18		1.270 (32.26) 1.260 (32.00)	1.210 (30.73) 1.200 (30.48)
F	19	1.938 (49.23)	1.812 (46.02)	1.316 (33.43) 1.306 (33.17)	1.3750-18	.151 (3.84) .130 (3.30)	1.395 (35.43) 1.385 (35.18)	1.335 (33.91) 1.325 (33.66)
G	21	2.062 (52.37)	1.938 (49.23)	1.441 (36.60) 1.431 (36.35)	1.5000-18		1.520 (38.61) 1.510 (38.35)	1.460 (37.08) 1.450 (36.83)
H	23	2.188 (55.58)	2.062 (52.37)	1.566 1.556 (39.52)	1.6250-18		1.645 (41.78) 1.635 (41.53)	1.585 (40.26) 1.575 (40.01)
J	25	2.312 (58.72)	2.188 (55.58)	1.691 (42.95) 1.681 (42.70)	1.7500-18		1.770 (44.96) 1.760 (44.70)	1.710 (43.43) 1.700 (43.18)

NOTES

1. Material/finish:
   - Shell, barrel, coupling nut, cover, Jam-nut - Al alloy/see Table I
   - Wave washer - CRES/passivate
   - Insulator - high-grade rigid dielectric
   - Seals - silicone
   - Contacts, ground ring - copper alloy/gold
2. All contacts are shorted to each other and to the shell. The maximum resistance as measured from any contact to the shell shall be 10 milliohms.
3. Glenair's 250-101 connectors are designed to mate with any QPL manufacturer's MIL-DTL-38999, Series I connectors having the same shell size, insert arrangement, and polarization.
4. Insert arrangement is in accordance with MIL-STD-1560. Contact manufacturer for additional arrangement options.
5. Insert arrangement is shown for reference only. Pin interface shown.
6. Alternate polarization 'U' (universal) is a non-standard mil-spec option which allows for mating to any QPL manufacturer's MIL-DTL-38999, Series I connector having the same shell size, insert arrangement, and mating contact size. Universal connectors are intended for use in testing facilities only and should be highly evaluated before consideration in another environment.
7. Connector temperature range: -55°C to 175°C. Contact manufacturer for additional options.

© 2025 Glenair, Inc • 1211 Air Way, Glendale, CA 91201 • 818-247-6000 • www.glenair.com • U.S. CAGE code 06324 •
SuperNine MIL-DTL-38999 Series I Type · Dimensions in Inches (millimeters) are subject to change without notice.

MIL-DTL-38999 Series I Type
Quick selection guide

QUICK SELECTION GUIDE		
Part Number	**Description**	**Page**
231-217	Connector with crimp-removable, size 8 RF and high-speed contact options	B-2
231-218	High-speed wall-mount receptacle with standoffs	B-9
231-218-07	High-speed jam-nut mount receptacle with standoffs	B-21
231-225	High-speed wall-mount dual flange receptacle	B-33
231-225-07	High-speed jam-nut mount dual flange receptacle	B-45

231-218-07

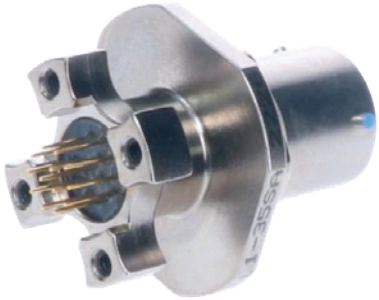

231-225-07

MIL-DTL-38999 Series I Type
231-217 Connector with crimp-removable, size 8 RF and high-speed contact options

HOW TO ORDER

Sample Part Number	231-217	-G6	NF	25	-	8	A	N	- 909CP

Basic Part Number	**231-217**
Connector Style	(See Table II)
Material/Finish	**NF**, **MA**, **MT**, **ME**, **ZR**, **Z1**, **ZL**, **AB** (See Table I)
Connector Size	**A**, **B**, **C**, **D**, **E**, **F**, **G**, **H**, **J**
Ground Option	**G** = Common Ground; **-** = None
Insert Arrangement	PER MIL-STD-1560
Contact Style	**A** = Pin Insert, Less Contacts; **B** = Socket Insert, Less Contacts
Alternate Polarization	**A**, **B**, **C**, **D**, **N** = Normal, **U** = Universal
Optional Mod Code	**909**** = Supplies Connector with Contacts **1213*** = Supplies Connectors with Contacts Per MIL-STD-1560

"BETER THAN QPL" FEATURES AND BENEFITS

- Improved, positive-lock, 3-point stainless-steel pin bayonet coupling with outstanding vibration and shock resistance
- High-speed, high-power, and hybrid contact arrangements available
- Plug ground fingers for advanced EMC
- Glenair signature Tin Zinc finish is RoHS compliant and cadmium compatible
- Precision-machined key/keyway polarization for reliable mismating protection
- Expanded receptacle styles include Clinch-nut and Helicoil mounting, and In-Line configuration
- Scoop-proof design prevents pin damage and short circuits
- 500 mating cycles

POWER SPECIFICATIONS

- Max operating temperature is 200°C finish dependent
- Meets Mil-Spec service rating, insert dependent

TABLE I: MATERIAL/FINISH

Sym	Material	Finish
NF	Aluminum Alloy	Cad/O.D. Over Electroless Nickel
MA		Electroless Nickel, Matte
ME		Electroless Nickel
MN		Tri-Nickel Alloy
MT		Nickel-PTFE
TZ		Tin Zinc Over Electroless Nickel
ZR		Zinc Ni, Black (Tri-Valent CR)
Z1	Stainless Steel	Passivate
ZL		Electrodeposited Nickel
AB	Marine Bronze	None (Clean Only)

TABLE II: CONNECTOR STYLE

Sym	Description
G6	Plug, EMI Spring, (MS27467T)
07	Receptacle, Jam-nut (MS27468T)
D0	Receptacle, Wall-mount Front Panel, Standard Holes (MS27466T)
E0	Receptacle, Extended Wall-mount, Back Panel, Standard Holes (MS27656T)
CS	Receptacle, Wall-mount, Standard Clinch-nuts
CM	Receptacle, Wall-mount, Metric Clinch-nuts
HS	Receptacle, Wall-mount, Standard Helicoils
HM	Receptacle, Wall-mount, Metric Helicoils
05	Receptacle, In-Line

© 2025 Glenair, Inc • 1211 Air Way, Glendale, CA 91201 • 818-247-6000 • www.glenair.com • U.S. CAGE code 06324 •
SuperNine MIL-DTL-38999 Series I Type · Dimensions in Inches (millimeters) are subject to change without notice.

MIL-DTL-38999 Series I Type
231-217 Connector with crimp-removable, size 8 RF and high-speed contact options

TABLE III - CONTACT REFERENCE GUIDE

Symbol	Description	Glenair P/N	Contact Size	Accomodates Awg Size	Wire Type	Grommet Follower P/N	Application Notes
C	Coax Per M39029/76 M39029/77	Pin: 852-008-16-424 Socket: 852-009-16-428	16	Coax Cable	RG174, RG316, RG179	N/A	Analog Radio Frequency Or Microwave Applications
	Coax Per M39029/102 M39029/103	Pin: 852-004-12-558 Socket: 852-005-12-559	12	Coax Cable	RG174, RG316, RG179	N/A	
	M39029/59 M39029/60 Coax Per	Pin: 852-007-08-367 Socket: 852-006-08-366	8	Coax Cable	M17/95-RG180	859-042-02	
C1	Coax, 75 OHM	Pin: 852-056-01F Socket: 852-057-01F	8	Coax Cable	V73263, V75268, V76261	859-042-01	Analog Radio Frequency Or Microwave Applications
D	Differential Twinax	Pin: 853-014-05 Socket: 853-013-05	8	24 AWG Twinax Cable	M17/176-00002	859-042-01	1553 DATABUS/ Differential Signal
E	El Ochito	Pin: 858-003-02 Socket: 858-004-02	8	26 AWG	963-003-26 963-033-26	687-643-8-2	1G/10G BASE-T Ethernet (White)
		Pin: 858-028-02 Socket: 858-029-02		24/26-30 AWG	963-110 & 963-118	687-643-8-2	USB 3.0 (BLUE)
		Pin: 858-030-02 Socket: 858-031-02		26-30 AWG	963-033-26	687-643-8-2	SATA 3.0 General High Speed (Red)
P	Power	Pin: 850-014 Socket: 850-013	8	8 AWG	M22759/11 OR EQUIV	859-042-03	Power
Q	Quadrax	Pin: 854-001-02 Socket: 854-002-02	8	24 AWG Quadrax	963-020	859-042-02	10/100base-T Ethernet
T	Triax/ Concentric Twinax	Pin: 853-003-08-625 Socket: 853-004-08-628	8	Twinax Cable	M17/176-00002	859-042-01	1553 Databus

NOTES

1. Material/finish:
   - Shell, barrel, coupling nut, jam-nut - see Table I
   - Insulator - high-grade rigid dielectric / N.A
   - For common ground option - al alloy / MFG. option
   - Seals, grommet - fluorosilicone blend / N.A.
   - Contacts & grommet follower to be ordered separately.
2. Assembly is identified with glenair's name, cage code, part number, and date code, space permitting
3. Glenair's 231-105 connectors are designed to mate with any QPL manufacturer's MIL-DTL-38999, Series I connectors having the same shell size, insert arrangement, and polarization.
4. Blue color band indicates rear release retention system.
5. All contacts, insertion/removal tool, and sealing plugs to be ordered separately.
6. Consult factory for crimp tools and/or accessory selection.
7. Alternate polarization 'U' (UNIVERSAL) is a non-standard MIL-SPEC option which allows for mating to any QPL manufacturer's MIL-DTL-38999, Series I connector having the same shell size, insert arrangement, and mating contact size. Universal connectors are intended for use in testing facilities only and should be highly evaluated before consideration in another environment.
8. See Figure 2 for reference orientation of the inner pins relative to connector main key/keyway.
9. Ground plane option only available for insert arrangements where all contacts are shielded type.
10. Optional mod code 909** can be added to the end of part number to include contacts listed in Table III. See mod code 909 drawing. Combo layouts shall include signal contacts IAW M39029/56 & /58. Contact manufacturer for additional options.

MIL-DTL-38999 Series I Type
231-217 Connector with crimp-removable, size 8 RF and high-speed contact options

TABLE IV - Wall-mount

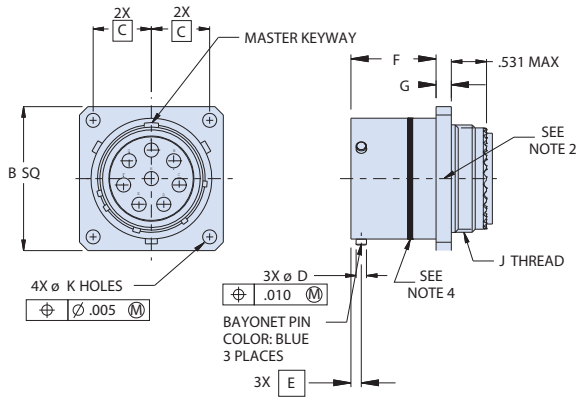

D0 - WALL MOUNT FRONT PANEL RECEPTACLE WITH STANDARD HOLES (MS27466T)

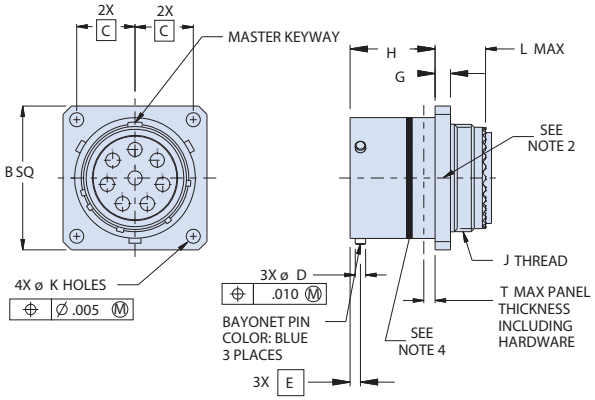

E0 - WALL MOUNT BACK PANEL RECEPTACLE WITH STANDARD HOLES (MS27656T)

Shell Size Code	Shell Size	B SQ	C BSC	F	G	H	J Thread	øK Holes	L Max	øD	E BSC	T Max
A	9	.958 (24.33) .918 (23.32)	.3595 (9.13)	.632 (16.05) .627 (15.93)	.100 (2.54) .085 (2.16)	.820 (20.83) .815 (20.70)	.4375-28 UNEF-2A	.138 (3.51) .123 (3.12)	.469 (11.91)	.084 (2.13) .076 (1.93)	.100 (2.54)	.234 (5.94)
B	11	1.051 (26.70) 1.011 (25.68)	.406 (10.31)				.5625-24 UNEF-2A					
C	13	1.145 (29.08) 1.105 (28.07)	.453 (11.51)				.6875-24 UNEF-2A					
D	15	1.239 (31.47) 1.199 (30.45)	.4845 (12.31)				.8125-20 UNEF-2A					
E	17	1.332 (33.83) 1.292 (32.82)	.531 (13.49)				.9375-20 UNEF-2A					
F	19	1.458 (37.03) 1.418 (36.02)	.578 (14.68)				1.0625-18 UNEF-2A					
G	21	1.582 (40.18) 1.542 (39.17)	.625 (15.88)	.602 (15.29) .597 (15.16)	.130 (3.30) .115 (2.92)	.790 (20.07) .785 (19.94)	1.1875-18 UNEF-2A		.500 (12.70)			.204 (5.18)
H	23	1.708 (43.38) 1.668 (42.37)	.6875 (17.46)				1.3125-18 UNEF-2A	.157 (3.99) .142 (3.61)				
J	25	1.832 (46.53) 1.792 (45.52)	.750 (19.05)				1.4375-18 UNEF-2A			.131 (3.33) .123 (3.12)	.109 (2.77)	.193 (4.90)

TABLE V - MOUNTING HOLES

Shell Size Code	Shell Size	øN Min	øP Min	øR Holes	S BSC
A	9	.656 (16.66)	.516 (13.11)	.133 (3.38) .123 (3.12)	.719 (18.26)
B	11	.796 (20.22)	.625 (15.88)		.812 (20.62)
C	13	.922 (23.42)	.750 (19.05)		.906 (23.01)
D	15	1.047 (26.59)	.906 (23.01)		.969 (24.61)
E	17	1.219 (30.96)	1.016 (25.81)		1.062 (26.97)
F	19	1.297 (32.94)	1.141 (28.98)		1.156 (29.36)
G	21	1.422 (36.12)	1.266 (32.16)		1.250 (31.75)
H	23	1.547 (39.29)	1.375 (34.92)	.159 (4.04) .149 (3.78)	1.375 (34.92)
J	25	1.672 (42.47)	1.484 (37.69)	.155 (3.94) .145 (3.68)	1.500 (38.10)

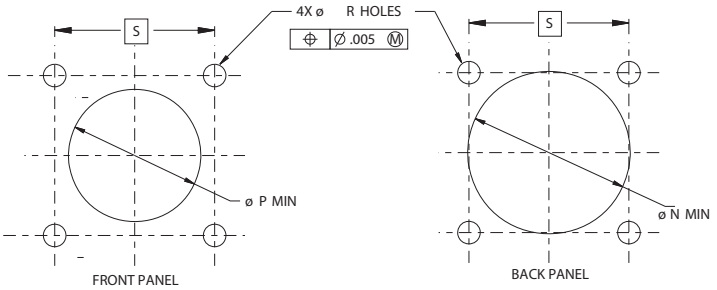

RECOMMENDED PANEL MOUNTING HOLES

© 2025 Glenair, Inc • 1211 Air Way, Glendale, CA 91201 • 818-247-6000 • www.glenair.com • U.S. CAGE code 06324 •
SuperNine MIL-DTL-38999 Series I Type · Dimensions in Inches (millimeters) are subject to change without notice.

MIL-DTL-38999 Series I Type
231-217 Connector with crimp-removable, size 8 RF and high-speed contact options

TABLE VI - Wall-mount, Clinch-nut AND HELICOIL

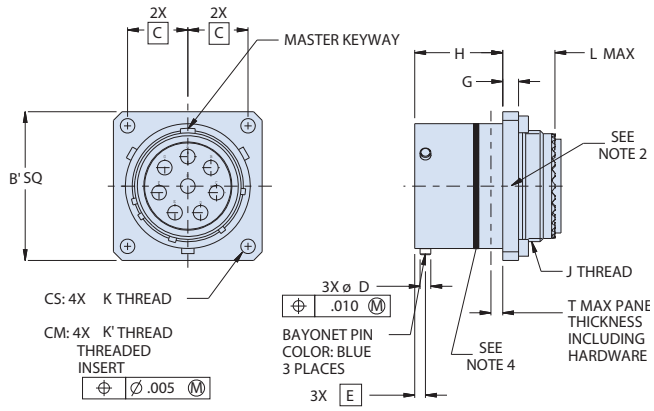

CS/CM - WALL MOUNT RECEPTACLE WITH STANDARD/METRIC CLINCH NUTS

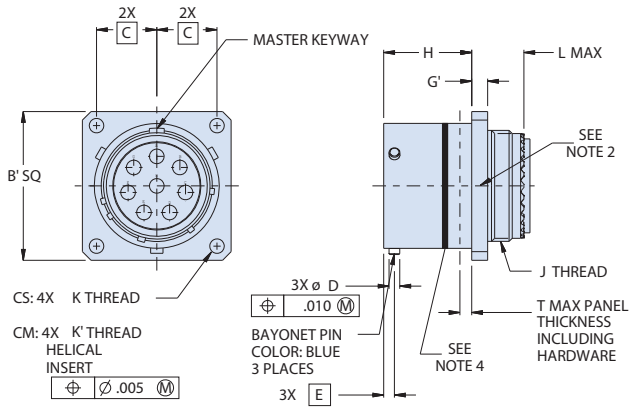

HS/HM - WALL MOUNT RECEPTACLE WITH STANDARD/METRIC HELICOILS

Shell Size Code	Shell Size	B' SQ	C BSC	G	G'	H	J Thread	K' Thread	K' Thread	L Max	øD	E BSC	T Max
A	9	1.094 (27.79) 1.054 (26.77)	.3595 (9.13)	.100 (2.54) .085 (2.16)	.179 (4.55) .140 (3.56)	.820 (20.83) .815 (20.70)	.4375-28 UNEF-2A	.112-40 UNC-3B	M3X0.5	.469 (11.91)	.084 (2.13) .076 (1.93)	.100 (2.54)	.234 (5.94)
B	11	1.187 (30.15) 1.147 (29.13)	.406 (10.31)				.5625-24 UNEF-2A						
C	13	1.281 (32.54) 1.241 (31.52)	.453 (11.51)				.6875-24 UNEF-2A						
D	15	1.344 (34.14) 1.304 (33.12)	.4845 (12.31)				.8125-20 UNEF-2A						
E	17	1.437 (36.50) 1.397 (35.48)	.531 (13.49)				.9375-20 UNEF-2A						
F	19	1.531 (38.89) 1.491 (37.87)	.578 (14.68)				1.0625-18 UNEF-2A						
G	21	1.625 (41.28) 1.585 (40.26)	.625 (15.88)	.130 (3.30) .115 (2.92)	.190 (4.83) .170 (4.32)	.790 (20.07) .785 (19.94)	1.1875-18 UNEF-2A			.500 (12.70)			.204 (5.18)
H	23	1.750 (44.45) 1.710 (43.43)	.6875 (17.46)				1.3125-18 UNEF-2A	.138-32 UNC-3B	M4X0.7				
J	25	1.875 (47.63) 1.835 (46.61)	.750 (19.05)				1.4375-18 UNEF-2A				.131 (3.33) .123 (3.12)	.109 (2.77)	.193 (4.90)

TABLE VII - MOUNTING HOLES

Shell Size Code	Shell Size	øN Min	øR Holes	S BSC
A	9	.656 (16.66)	.133 (3.38) .123 (3.12)	.719 (18.26)
B	11	.796 (20.22)		.812 (20.62)
C	13	.922 (23.42)		.906 (23.01)
D	15	1.047 (26.59)		.969 (24.61)
E	17	1.219 (30.96)		1.062 (26.97)
F	19	1.297 (32.94)		1.156 (29.36)
G	21	1.422 (36.12)		1.250 (31.75)
H	23	1.547 (39.29)	.159 (4.04) .149 (3.78)	1.375 (34.92)
J	25	1.672 (42.47)	.155 (3.94) .145 (3.68)	1.500 (38.10)

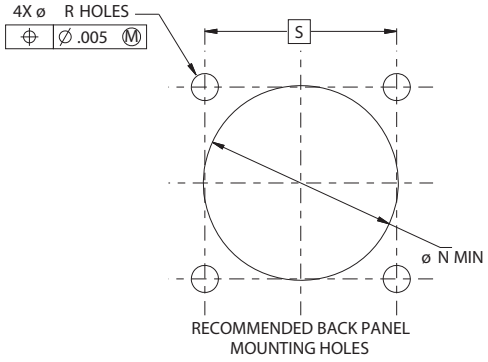

MIL-DTL-38999 Series I Type
231-217 Connector with crimp-removable, size 8 RF and high-speed contact options

TABLE VIII - Jam-nut MOUNT

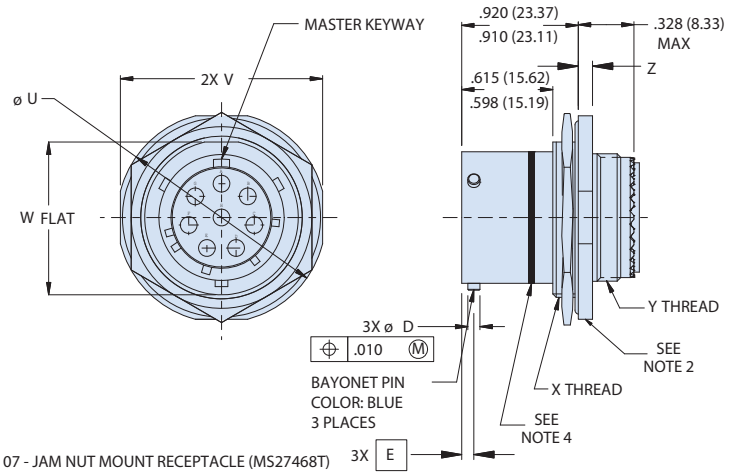

Shell Size Code	Shell Size	øU	V	W Flat	X Thread	Z	L Max	øD	E BSC	øFF	øGG
A	9	1.204 (30.58) 1.172 (29.77)	1.078 (27.38) 1.046 (26.57)	.655 (16.64) .645 (16.38)	.6875-24 UNEF-2A	.120 (3.05) .099 (2.51)	1.006 (25.55)	.084 (2.13) .076 (1.93)	.100 (2.54)	.475 (12.07)	.538 (13.67)
B	11	1.391 (35.33) 1.359 (34.52)	1.266 (32.16) 1.234 (31.34)	.755 (19.18) .745 (18.92)	.8125-20 UNEF-2A					.600 (15.24)	.662 (16.81)
C	13	1.516 (38.51) 1.484 (37.69)	1.391 (35.33) 1.359 (34.52)	.942 (23.93) .932 (23.67)	1.000-20 UNEF-2A					.700 (17.78)	.762 (19.35)
D	15	1.641 (41.68) 1.609 (40.87)	1.516 (38.51) 1.484 (37.69)	1.066 (27.08) 1.056 (26.82)	1.1250-18 UNEF-2A					.835 (21.21)	.898 (22.81)
E	17	1.766 (44.86) 1.734 (44.04)	1.641 (41.68) 1.609 (40.87)	1.191 (30.25) 1.181 (30.00)	1.2500-18 UNEF-2A					.960 (24.38)	1.022 (25.96)
F	19	1.954 (49.63) 1.922 (48.82)	1.828 (46.43) 1.796 (45.62)	1.316 (33.43) 1.306 (33.17)	1.3750-18 UNEF-2A	.151 (3.84) .130 (3.30)	1.037 (26.34)			1.062 (26.97)	1.125 (28.58)
G	21	2.078 (52.78) 2.046 (51.97)	1.954 (49.63) 1.922 (48.82)	1.441 (36.60) 1.431 (36.35)	1.5000-18 UNEF-2A					1.188 (30.18)	1.250 (31.75)
H	23	2.204 (55.98) 2.172 (55.17)	2.078 (52.78) 2.046 (51.97)	1.566 (39.78) 1.556 (39.52)	1.6250-18 UNEF-2A					1.275 (32.39)	1.338 (33.99)
J	25	2.328 (59.13) 2.296 (58.32)	2.204 (55.98) 2.172 (55.17)	1.691 (42.95) 1.681 (42.70)	1.7500-18 UNEF-2A			.131 (3.33) .123 (3.12)	.109 (2.77)	1.475 (37.47)	1.538 (39.07)

TABLE IX - PANEL-MOUNT

Shell Size Code	Shell Size	øAA	BB: Flat
A	9	.703 (17.86): .693 (17.60)	.661 (16.79): .654 (16.61)
B	11	.835 (21.21): .825 (20.96)	.771 (19.58): .761 (19.33)
C	13	1.020 (25.91): 1.010 (25.65)	.955 (24.26): .945 (24.00)
D	15	1.145 (29.08): 1.135 (28.83)	1.085 (27.56): 1.075 (27.30)
E	17	1.270 (32.26): 1.260 (32.00)	1.210 (30.73): 1.200 (30.48)
F	19	1.395 (35.43): 1.385 (35.18)	1.335 (33.91): 1.325 (33.65)
G	21	1.520 (38.61): 1.510 (38.35)	1.460 (37.08): 1.450 (36.83)
H	23	1.645 (41.78): 1.635 (41.53)	1.585 (40.26): 1.575 (40.00)
J	25	1.770 (44.96): 1.760 (44.70)	1.710 (43.43): 1.700 (43.18)

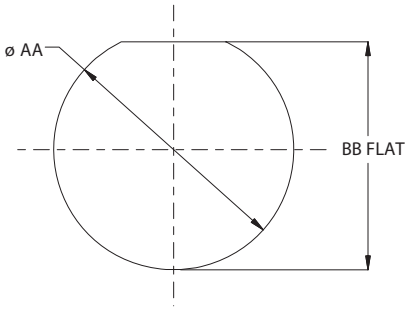

RECOMMENDED PANEL CUT OUT

© 2025 Glenair, Inc • 1211 Air Way, Glendale, CA 91201 • 818-247-6000 • www.glenair.com • U.S. CAGE code 06324 •
SuperNine MIL-DTL-38999 Series I Type · Dimensions in Inches (millimeters) are subject to change without notice.

MIL-DTL-38999 Series I Type
231-217 Connector with crimp-removable, size 8 RF and high-speed contact options

TABLE X - IN-LINE

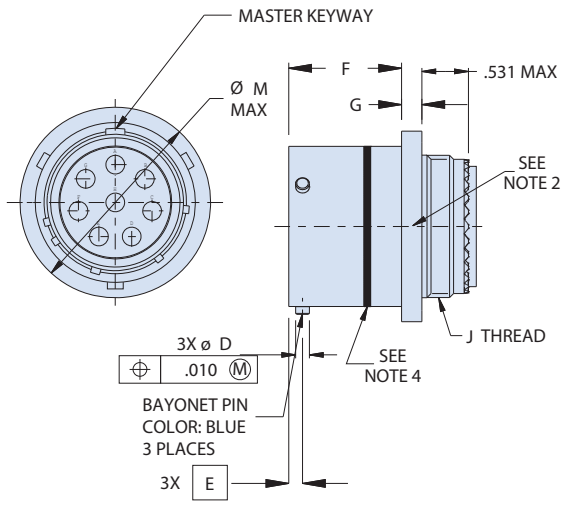

05 - IN-LINE RECEPTACLE

Shell Size Code	Shell Size	F	G	J Thread	øD	E BSC	øM Max
A	9	.632 (16.05) .627 (15.93)	.100 (2.54) .085 (2.16)	.4375-28 UNEF-2A	.084 (2.13) .076 (1.93)	.100 (2.54)	.859 (21.82)
B	11			.5625-24 UNEF-2A			.984 (24.99)
C	13			.6875-24 UNEF-2A			1.156 (29.36)
D	15			.8125-20 UNEF-2A			1.281 (32.54)
E	17			.9375-20 UNEF-2A			1.406 (35.71)
F	19			1.0625-18 UNEF-2A			1.516 (38.51)
G	21	.602 (15.29) .597 (15.16)	.130 (3.30) .115 (2.92)	1.1875-18 UNEF-2A			1.641 (41.68)
H	23			1.3125-18 UNEF-2A			1.766 (44.86)
J	25			1.4375-18 UNEF-2A	.131 (3.33) .123 (3.12)	.109 (2.77)	1.891 (48.03)

TABLE XI - PLUG

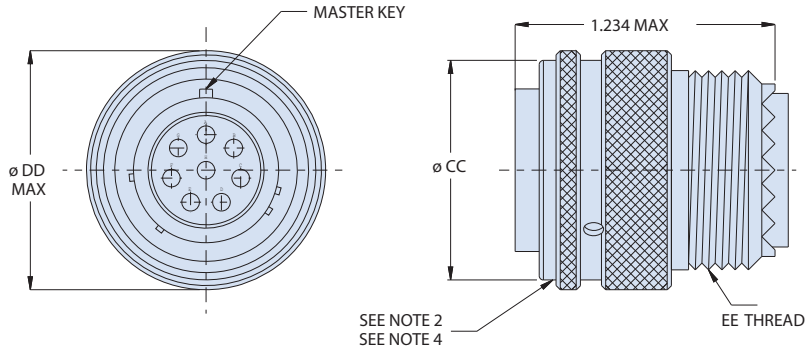

G6 - PLUG WITH EMI SPRING (MS27467T)

Shell Size Code	Shell Size	øCC	øDD Max	EE Thread
A	9	.791 (20.09); .780 (19.81)	.859 (21.82)	.4375-28 UNEF-2A
B	11	.916 (23.27): .905 (22.99)	.984 (24.99)	.5625-24 UNEF-2A
C	13	1.072 (27.23): 1.061 (26.95)	1.156 (29.36)	.6875-24 UNEF-2A
D	15	1.197 (30.40): 1.186 (30.12)	1.281 (32.54)	.8125-20 UNEF-2A
E	17	1.312 (33.32): 1.301 (33.05)	1.406 (35.71)	.9375-20 UNEF-2A
F	19	1.433 (36.40): 1.422 (36.12)	1.516 (38.51)	1.0625-18 UNEF-2A
G	21	1.555 (39.50): 1.544 (39.22)	1.641 (41.68)	1.1875-18 UNEF-2A
H	23	1.678 (42.62): 1.667 (42.34)	1.766 (44.86)	1.3125-18 UNEF-2A
J	25	1.804 (45.82): 1.793 (45.54)	1.891 (48.03)	1.4375-18 UNEF-2A

© 2025 Glenair, Inc • 1211 Air Way, Glendale, CA 91201 • 818-247-6000 • www.glenair.com • U.S. CAGE code 06324 •

MIL-DTL-38999 Series I Type
231-217 Connector with crimp-removable, size 8 RF and high-speed contact options

HIGH-SPEED CONNECTORS

EL OCHITO MATING CONTACT		
Mating Part Number		Protocols
WHITE-PIN	858-003	Use for Gb ethernet and 10Gb ethernet protocols
WHITE-SKT	858-004	Use for Gb ethernet and 10Gb ethernet protocols
BLUE-PIN	858-028	Use for USB 3.0 (90 Ohm)
BLUE-SKT	858-029	Use for USB 3.0 (90 Ohm)
RED-PIN	858-030	Use for all high-bandwidth 100 ohm differential lines
RED-SKT	858-031	Use for all high-bandwidth 100 ohm differential lines

EL OCHITO PROTOCOLS		
		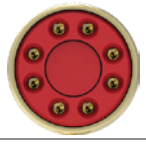
WHITE	**BLUE**	**RED**
10GBASE-T	**USB 3.0**	**HDMI, SATA, DisplayPort**

The Ochito octaxial contact has a color-coded insulator signifying the data protocol. White is used for 10 Gb Ethernet, blue is used for USB 3.0, and red is used for multi gigabit 100 ohm protocols including HDMI, DisplayPort and SATA. The connector part number includes a protocol code from Table III. This code determines specific contact position for every combination of protocol.

Example
Code E7

Example
Code E5

TABLE III - OCHITO POSITIONS B = BLUE, R = RED, W = WHITE								
SYM	Contact 1	Contact 2	Contact 3	Contact 4	Contact 5	Contact 6	Contact 7	Contact 8
E	W	W	W	W	W	W	W	W
E2	B	W	W	W	W	W	W	W
E3	R	W	W	W	W	W	W	W
E4	B	B	W	W	W	W	W	W
E5	R	B	W	W	W	W	W	W
E6	R	R	W	W	W	W	W	W
E7	B	B	B	W	W	W	W	W
E8	R	B	B	W	W	W	W	W
E9	R	R	B	W	W	W	W	W
E10	R	R	R	W	W	W	W	W
E11	B	B	B	B	W	W	W	W
E12	R	B	B	B	W	W	W	W
E13	R	R	B	B	W	W	W	W
E14	R	R	R	B	W	W	W	W
E15	R	R	R	R	W	W	W	W
E16	B	B	B	B	B	W	W	W
E17	R	B	B	B	B	W	W	W
E18	R	R	B	B	B	W	W	W
E19	R	R	R	B	B	W	W	W
E20	R	R	R	R	B	W	W	W
E21	R	R	R	R	R	W	W	W
E22	B	B	B	B	B	B	W	W
E23	R	B	B	B	B	B	W	W
E24	R	R	B	B	B	B	W	W
E25	R	R	R	B	B	B	W	W
E26	R	R	R	R	B	B	W	W
E27	R	R	R	R	R	B	W	W
E28	R	R	R	R	R	R	W	W
E29	B	B	B	B	B	B	B	W
E30	R	B	B	B	B	B	B	W
E31	R	R	B	B	B	B	B	W
E32	R	R	R	B	B	B	B	W
E33	R	R	R	R	B	B	B	W
E34	R	R	R	R	R	B	B	W
E35	R	R	R	R	R	R	B	W
E36	R	R	R	R	R	R	R	W
E37	B	B	B	B	B	B	B	B
E38	R	B	B	B	B	B	B	B
E39	R	R	B	B	B	B	B	B
E40	R	R	R	B	B	B	B	B
E41	R	R	R	R	B	B	B	B
E42	R	R	R	R	R	B	B	B
E43	R	R	R	R	R	R	B	B
E44	R	R	R	R	R	R	R	B
E45	R	R	R	R	R	R	R	R

© 2025 Glenair, Inc • 1211 Air Way, Glendale, CA 91201 • 818-247-6000 • www.glenair.com • U.S. CAGE code 06324 •
SuperNine MIL-DTL-38999 Series I Type · Dimensions in Inches (millimeters) are subject to change without notice.

MIL-DTL-38999 Series I Type
231-218 High-speed wall-mount receptacle with standoffs

HOW TO ORDER

Sample Part Number	231-218	-CM	NF	17	E	-	2	P	N

Basic Part Number	**231-218**
Connector Style	(See Table IV)
Material/Finish	(See Table V)
Shell Size	**9**, **11**, **13**, **15**, **17**, **19**, **21**, **23**, **25**
Contact Type	(See Table VI)
Ground Option	**G** = Common Ground **-** = None
Insert Arrangement	PER MIL-STD-1560
Contact Style	**P** = Pin, PC Tail **S** = Socket, PC Tail
Alternate Polarization	**A**, **B**, **C**, **D**, **E**, **N** = Normal, **U** = Universal

"BETTER THAN QPL" FEATURES AND BENEFITS

- Improved, positive-lock, 3-point stainless-steel pin bayonet coupling with outstanding vibration and shock resistance
- Plug ground fingers for advanced EMC
- Glenair Signature tin zinc finish class is RoHS compliant and cadmium compatible
- Precision-machined key/keyway polarization for reliable mismating protection
- Expanded receptacle styles include Clinch-nut and Helicoil mounting, and In-Line configurations
- Scoop-proof design prevents pin damage and short circuits
- Fully tooled for all MIL-STD-1560 insert arrangements
- Contact options include size #22D, #20, #16, and #12 (see High-Speed series for Size #8)
- 500+ mating cycles exceeds MIL-DTL-38999 specification

POWER SPECIFICATIONS

- Max operating temperature is 200°C finish dependent
- Meets Mil-Spec service rating, insert dependent

TABLE II - MOUNTING HOLES

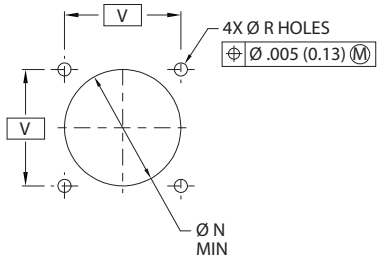

BACK PANEL
RECOMMENDED MOUNTING HOLES

Shell Size Code	Shell Size	ØN Min	ØR Holes	V Bsc
A	9	0.656 (16.66)	.133 (3.38) .123 (3.12)	0.719 (18.26)
B	11	0.796 (20.22)		0.812 (20.62)
C	13	0.922 (23.42)		0.906 (23.01)
D	15	1.047 (26.59)		0.969 (24.61)
E	17	1.219 (30.96)		1.062 (26.97)
F	19	1.297 (32.94)		1.156 (29.36)
G	21	1.422 (36.12)		1.250 (31.75)
H	23	1.547 (39.29)	.159 (4.04) .149 (3.78)	1.375 (34.93)
J	25	1.672 (42.47)	.155 (3.94) .145 (3.68)	1.500 (38.10)

TABLE III

Contact Size	PC Tail Øm
NO 23	.020 (0.51) .018 (0.46)
NO 22	.020 (0.51) .018 (0.46)
NO 20	.030 (0.76) .028 (0.71)
NO 16	.040 (1.02) .038 (0.97)
NO 12	.072 (1.83) .070 (1.78)

TABLE IV - CONNECTOR STYLE

SYM	Description
CM	Receptacle, Wall-mount With Metric Clinch-nuts
CS	Receptacle, Wall-mount With Standard Clinch-nuts
D0	Receptacle, Wall-mount With Thru Holes
HM	Receptacle, Wall-mount With Metric Helicoils
HS	Receptacle, Wall-mount With Standard Helicoils
T0	Receptacle, Wall-mount With Std Tapped Holes (MAT; SST & MB)
T1	Receptacle, Wall-mount With Mtc Tapped Holes (MAT; SST & MB)

© 2025 Glenair, Inc • 1211 Air Way, Glendale, CA 91201 • 818-247-6000 • www.glenair.com • U.S. CAGE code 06324 •

MIL-DTL-38999 Series I Type
231-218 High-speed wall-mount receptacle with standoffs

TABLE VII - OCHITO POSITIONS
B = BLUE, R = RED, W = WHITE

SYM	Contact 1	Contact 2	Contact 3	Contact 4	Contact 5	Contact 6	Contact 7	Contact 8
E	W	W	W	W	W	W	W	W
E2	B	W	W	W	W	W	W	W
E3	R	W	W	W	W	W	W	W
E4	B	B	W	W	W	W	W	W
E5	R	B	W	W	W	W	W	W
E6	R	R	W	W	W	W	W	W
E7	B	B	B	W	W	W	W	W
E8	R	B	B	W	W	W	W	W
E9	R	R	B	W	W	W	W	W
E10	R	R	R	W	W	W	W	W
E11	B	B	B	B	W	W	W	W
E12	R	B	B	B	W	W	W	W
E13	R	R	B	B	W	W	W	W
E14	R	R	R	B	W	W	W	W
E15	R	R	R	R	W	W	W	W
E16	B	B	B	B	B	W	W	W
E17	R	B	B	B	B	W	W	W
E18	R	R	B	B	B	W	W	W
E19	R	R	R	B	B	W	W	W
E20	R	R	R	R	B	W	W	W
E21	R	R	R	R	R	W	W	W
E22	B	B	B	B	B	B	W	W
E23	R	B	B	B	B	B	W	W
E24	R	R	B	B	B	B	W	W
E25	R	R	R	B	B	B	W	W
E26	R	R	R	R	B	B	W	W
E27	R	R	R	R	R	B	W	W
E28	R	R	R	R	R	R	W	W
E29	B	B	B	B	B	B	B	W
E30	R	B	B	B	B	B	B	W
E31	R	R	B	B	B	B	B	W
E32	R	R	R	B	B	B	B	W
E33	R	R	R	R	B	B	B	W
E34	R	R	R	R	R	B	B	W
E35	R	R	R	R	R	R	B	W
E36	R	R	R	R	R	R	R	W
E37	B	B	B	B	B	B	B	B
E38	R	B	B	B	B	B	B	B
E39	R	R	B	B	B	B	B	B
E40	R	R	R	B	B	B	B	B
E41	R	R	R	R	B	B	B	B
E42	R	R	R	R	R	B	B	B
E43	R	R	R	R	R	R	B	B
E44	R	R	R	R	R	R	R	B
E45	R	R	R	R	R	R	R	R

TABLE V - MATERIAL/FINISH

Sym	Material	Finish
NF	Aluminum Alloy	Cad/O.D. Over Electroless Nickel
MA		Electroless Nickel, Matte
ME		Electroless Nickel
MN		Tri-Nickel Alloy
MT		Nickel-PTFE
TZ		Tin Zinc Over Electroless Nickel
ZN		Zinc-Nickel Olive Drab
ZR		Zinc Ni, Black (Tri-Valent Cr)
Z1	Stainless Steel (SST)	Passivate
ZL		Electrodeposited Nickel
AB	Marine Bronze (MB)	None (Clean Only)

TABLE VI - CONTACT STYLE

SYM	Description
C	Coax, 50 Ohm
C1	Coax, 75 Ohm
D	Differential Twinax
E*	El Ochito
P	Power
Q	Quadrax
T	Triax/Concentric Twinax
OMIT	Per Mil-Std-1560

TABLE VIII - EL OCHITO MATING CONTACT

Mating Part Number		Protocols
WHITE-PIN	858-003	Use for Gb ethernet and 10Gb ethernet protocols
WHITE-SKT	858-004	Use for Gb ethernet and 10Gb ethernet protocols
BLUE-PIN	858-028	Use for USB 3.0 (90 Ohm)
BLUE-SKT	858-029	Use for USB 3.0 (90 Ohm)
RED-PIN	858-030	Use for all high-bandwidth 100 ohm differential lines
RED-SKT	858-031	Use for all high-bandwidth 100 ohm differential lines

EL OCHITO PROTOCOLS

WHITE	BLUE	RED
10GBASE-T	USB 3.0	HDMI, SATA, DisplayPort

The Ochito octaxial contact has a color-coded insulator signifying the data protocol. White is used for 10 Gb Ethernet, blue is used for USB 3.0, and red is used for multi gigabit 100 ohm protocols including HDMI, DisplayPort and SATA. The connector part number includes a protocol code from Table VII. This code determines specific contact position for every combination of protocol.

© 2025 Glenair, Inc • 1211 Air Way, Glendale, CA 91201 • 818-247-6000 • www.glenair.com • U.S. CAGE code 06324 •
SuperNine MIL-DTL-38999 Series I Type · Dimensions in Inches (millimeters) are subject to change without notice.

MIL-DTL-38999 Series I Type
231-218 High-speed wall-mount receptacle with standoffs

TABLE I - CM - WALL-MOUNT RECEPTACLE

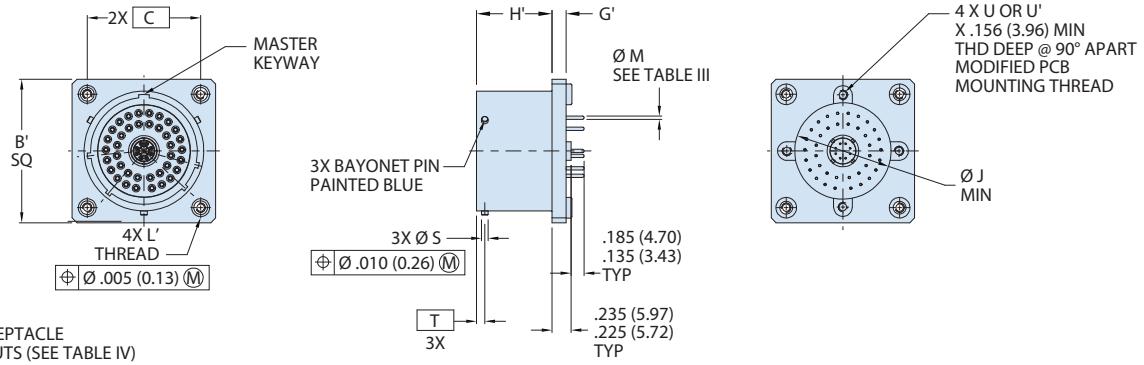

CM - WALL MOUNT RECEPTACLE
WITH METRIC CLINCH NUTS (SEE TABLE IV)

Shell Size Code	Shell Size	B Sq	B' Sq	C Bsc	G	G'	H	H'	ØJ Min	Øk	L Thread	L' Thread	ØS	T Bsc	Stand-Off Threads U	Stand-Off Threads U'
A	9	.948 (24.08) .925 (23.50)	1.043 (26.49) 1.003 (25.48)	0.719 (18.26)	.103 (2.62) .077 (1.96)	.153 (3.89) .127 (3.23)	.952 (24.18) .928 (23.57)	.927 (23.55) .903 (22.94)	0.340 (8.64)	.136 (3.45) .120 (3.05)	.112-40 UNC	M3X0.5	.084 (2.13) .076 (1.93)	0.100 (2.54)	Accepts .112-40 UNC-2A	Accepts M3 X 0.5-6G
B	11	1.043 (26.49) 1.019 (25.88)	1.136 (28.85) 1.096 (27.84)	0.812 (20.62)					0.468 (11.89)							
C	13	1.137 (28.88) 1.114 (28.30)	1.230 (31.24) 1.190 (30.23)	0.906 (23.01)					0.572 (14.53)							
D	15	1.232 (31.29) 1.208 (30.68)	1.293 (32.84) 1.253 (31.83)	0.969 (24.61)					0.705 (17.91)							
E	17	1.323 (33.60) 1.299 (32.99)	1.386 (35.20) 1.346 (34.19)	1.062 (26.97)					0.830 (21.08)							
F	19	1.449 (36.80) 1.425 (36.20)	1.480 (37.59) 1.440 (36.58)	1.156 (29.36)					0.934 (23.72)							
G	21	1.575 (40.01) 1.551 (39.40)	1.574 (39.98) 1.534 (38.96)	1.250 (31.75)	.133 (3.38) .107 (2.72)				1.055 (26.80)							
H	23	1.701 (43.21) 1.677 (42.60)	1.759 (44.68) 1.719 (43.66)	1.375 (34.93)		.183 (4.65) .157 (3.99)			1.160 (29.46)	.162 (4.11) .146 (3.71)	.138-32 UNC	M4X0.7				
J	25	1.823 (46.30) 1.799 (45.69)	1.884 (47.85) 1.844 (46.84)	1.500 (38.10)					1.307 (33.20)				.131 (3.33) .123 (3.12)	0.109 (2.77)		

© 2025 Glenair, Inc • 1211 Air Way, Glendale, CA 91201 • 818-247-6000 • www.glenair.com • U.S. CAGE code 06324 •

MIL-DTL-38999 Series I Type
231-218 High-speed wall-mount receptacle with standoffs

CS - WALL-MOUNT RECEPTACLE

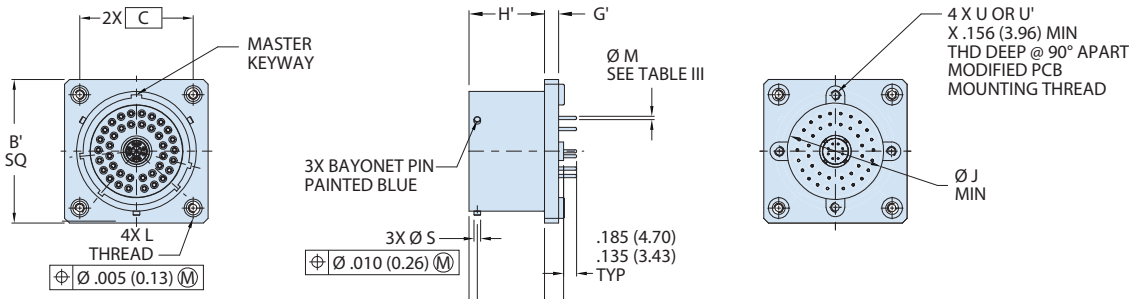

CS - WALL MOUNT RECEPTACLE
WITH STANDARD CLINCH NUTS (SEE TABLE IV)

D0 - WALL-MOUNT RECEPTACLE

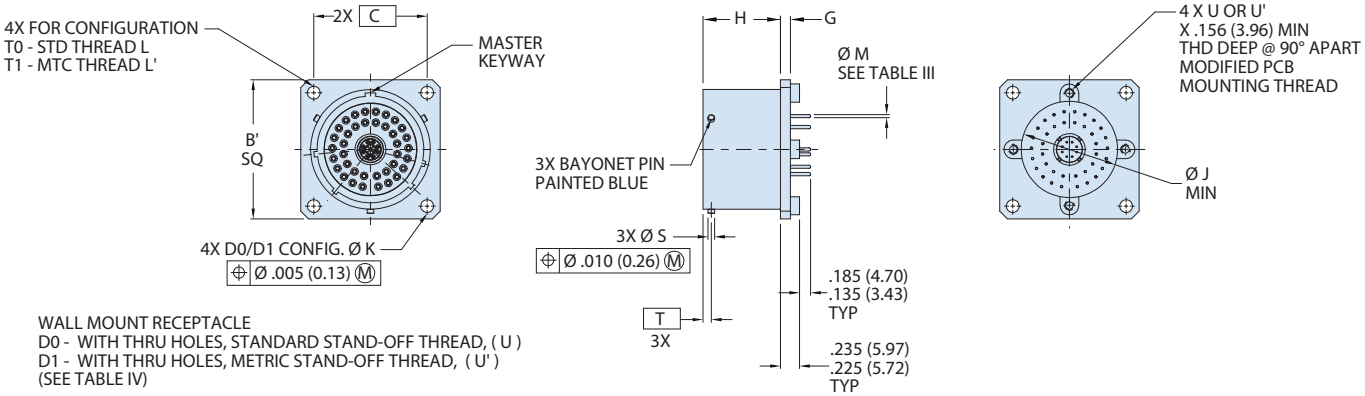

WALL MOUNT RECEPTACLE
D0 - WITH THRU HOLES, STANDARD STAND-OFF THREAD, (U)
D1 - WITH THRU HOLES, METRIC STAND-OFF THREAD, (U')
(SEE TABLE IV)

OR

T0 - WITH STD TAPPED HOLES AND STANDARD STAND-OFF THREAD, (U)
T1 - WITH MTC TAPPED HOLES AND METRIC STAND-OFF THREAD, (U')
(MAT; STAINLESS STEEL AND MARINE BRONZE) (SEE TABLE IV)

© 2025 Glenair, Inc • 1211 Air Way, Glendale, CA 91201 • 818-247-6000 • www.glenair.com • U.S. CAGE code 06324 •
SuperNine MIL-DTL-38999 Series I Type · Dimensions in Inches (millimeters) are subject to change without notice.

MIL-DTL-38999 Series I Type
231-218 High-speed wall-mount receptacle with standoffs

HM - WALL-MOUNT RECEPTACLE

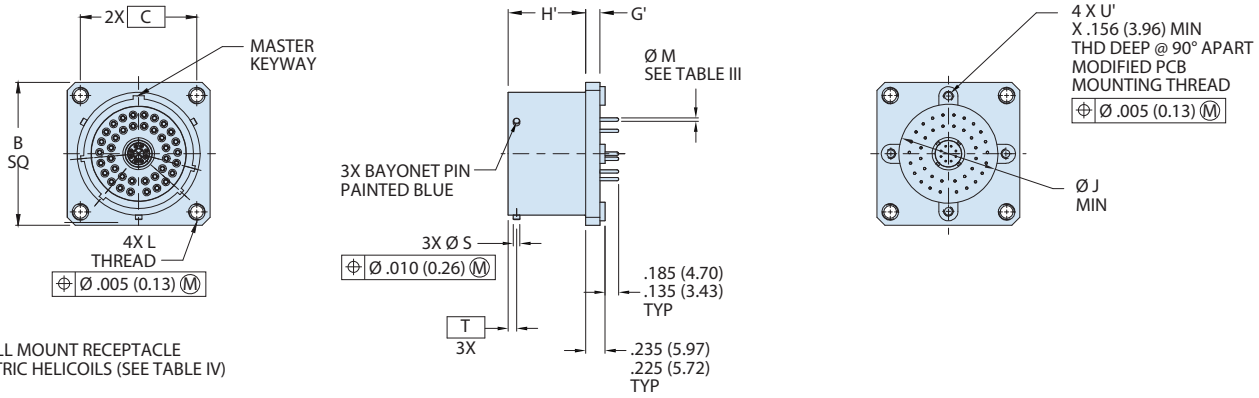

HM - WALL MOUNT RECEPTACLE
WITH METRIC HELICOILS (SEE TABLE IV)

HS - WALL-MOUNT RECEPTACLE

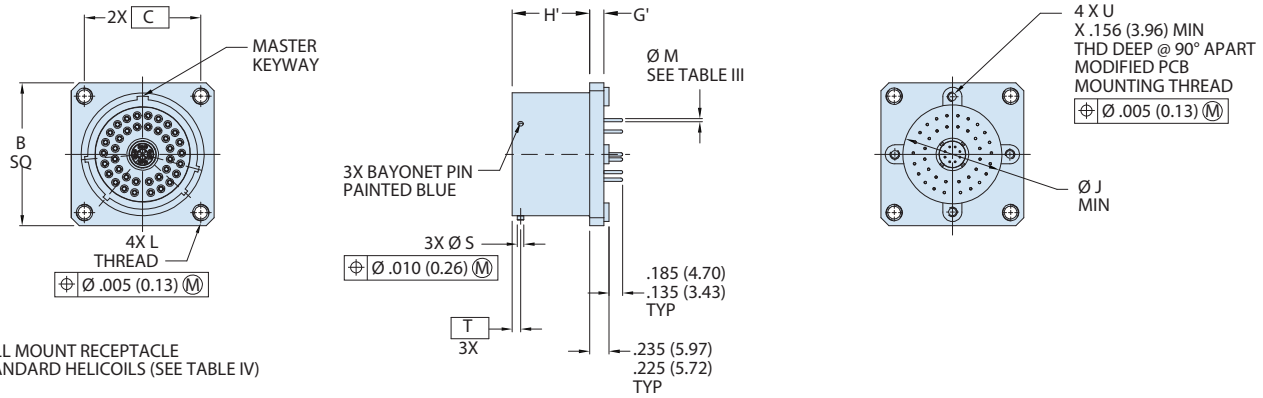

HS - WALL MOUNT RECEPTACLE
WITH STANDARD HELICOILS (SEE TABLE IV)

MIL-DTL-38999 Series I Type
231-218 High-speed wall-mount receptacle with standoffs

FIGURE 1 - INSERT ARRANGEMENTS

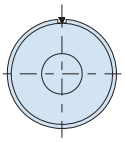

Arrangement 9XG5
(Available only with
ground plane option)

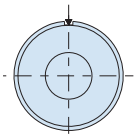

Arrangement 11x-1
1x Size 8

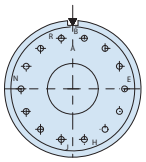

Arrangement 13x-14
1x Size 8
14x Size 23

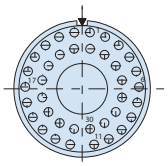

Arrangement 17x-2
1x Size 8
38x Size 22

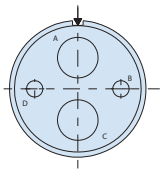

Arrangement 17x-22
(IAW prEN 3645-001)
2x Size 8
2x Size 12

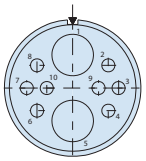

Arrangement 17x-60
2x Size 8
8x Size 22

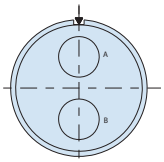

Arrangement 17x-75
(IAW prEN 3645-001)
2x Size 8

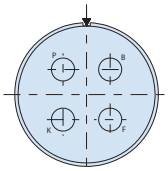

Arrangement 19x-4
4x Size 8

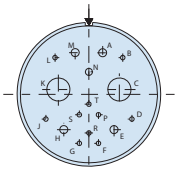

Arrangement 19x-17
10x Size 22d
1x Size 20
4x Size 16
2x Size 8

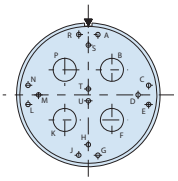

Arrangement 19x-18
14x Size 22d
4x Size 8

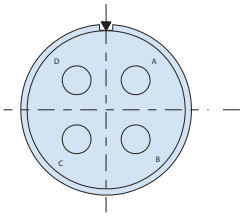

Arrangement 21x-75
4x Size 8

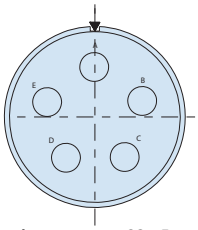

Arrangement 23x-5
(IAW prEN 3645-001)

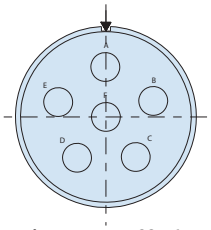

Arrangement 23x-6
(IAW prEN 3645-001)
5x Size 8

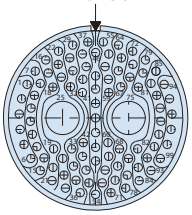

Arrangement 25x-7
97x Size 22
2x Size 8
6x Size 8

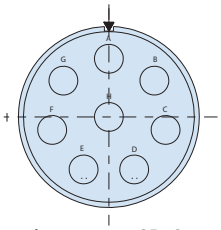

Arrangement 25x-8
8x Size 8

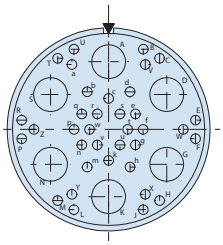

Arrangement 25x-17
36x Size 22

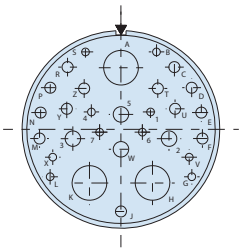

Arrangement 25x-20
(IAW prEN 3645-001)
10x Size 20
13x Size 16
4x Size 12
3x Size 8

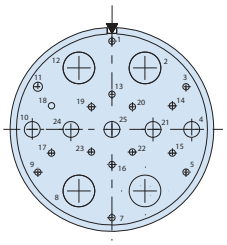

Arrangement 25x-26
(IAW prEN 3645-001)
16x Size 20, 5x Size 12
4x Size 8

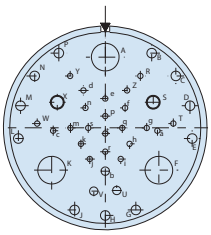

Arrangement 25x-41
22x Size 22d, 3x Size 20
11x Size 16, 2x Size 12
3x Size 8

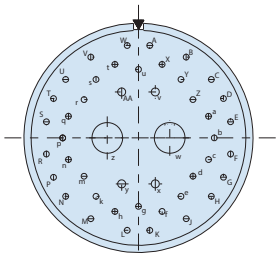

Arrangement 25x-46
40x Size 20
4x Size 16
2x Size 8

Figure 1
Insert arrangements, mating face of pin insert shown.
Replace X with C, D, E, Q or T
(See Table VI)

FIGURE 2 - CONTACT INNER PIN ORIENTATION

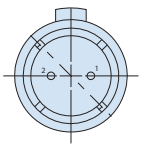

Differential
Twinax

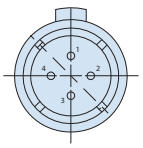

Quadrax

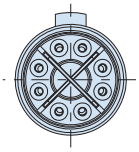

El Ochito

© 2025 Glenair, Inc • 1211 Air Way, Glendale, CA 91201 • 818-247-6000 • www.glenair.com • U.S. CAGE code 06324 •
SuperNine MIL-DTL-38999 Series I Type · Dimensions in Inches (millimeters) are subject to change without notice.

MIL-DTL-38999 Series I Type
231-218 High-speed wall-mount receptacle with standoffs

COAX CONTACTS

COAX CONTACTS

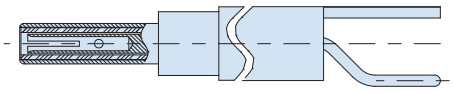

Size #16 Coax Contact, Pin, PC Tail Detail
Interface per M39029/76
Note: Max usable frequency of 700 Mhz

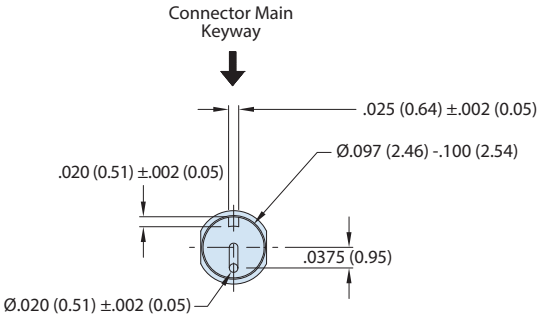

Contact rear view
and interface requirements

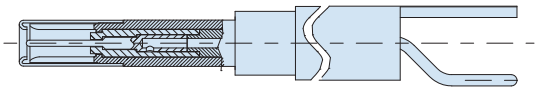

Size #16 Coax Contact, Socket, PC Tail Detail
Interface per M39029/77
Note: Max usable frequency of 700 Mhz

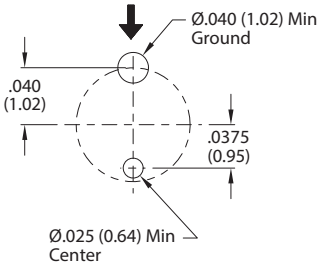

Recommended PCB Footprint

MIL-DTL-38999 Series I Type
231-218 High-speed wall-mount receptacle with standoffs

COAX CONTACTS

COAX CONTACTS

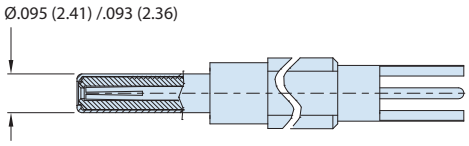

Size #12 Coax Contact Pin, PC Tail Detail
Interface per M39029/102

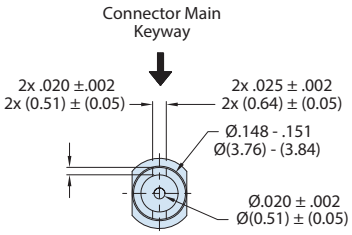

50 Ohm contact rear view
and interface requirements

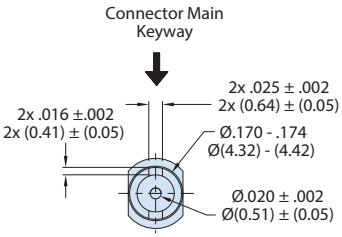

75 Ohm contact rear view
and interface requirements

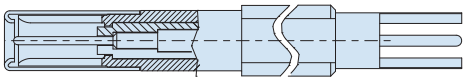

Size #12 Coax Contact Socket, PC Tail Detail
Interface per M39029/103

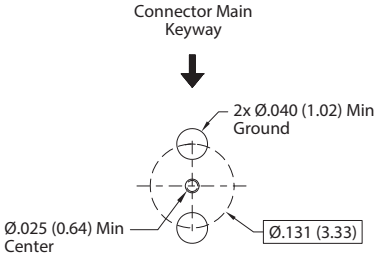

50 Ohm Contact
Recommended PCB Footprint

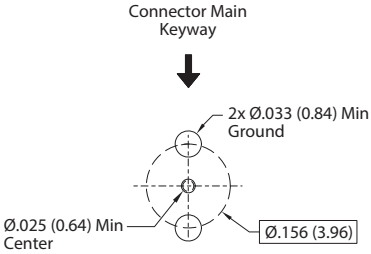

75 Ohm Contact
Recommended PCB Footprint

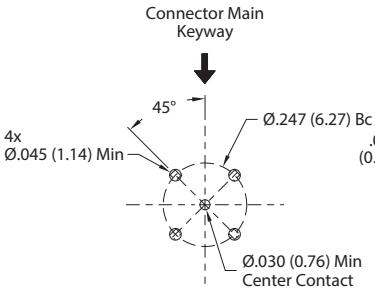

Recommended
Co-ax PCB Layout

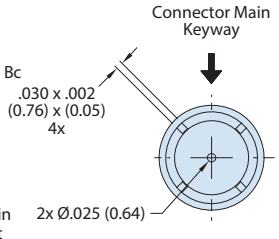

Rear View

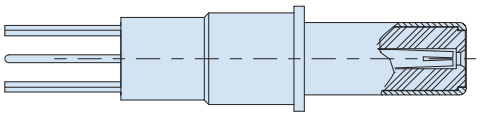

SIZE #8 CO-AX PIN, PC TAIL DETAIL
C = Interface Per M39029/60 (50 Ohm)
C1 = Interface Per 852-056 (75 Ohm)

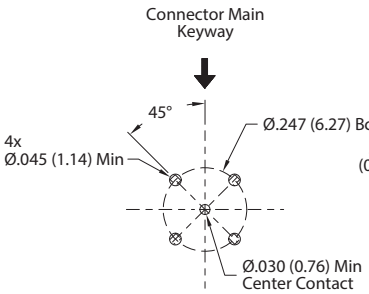

Recommended
Co-ax PCB Layout

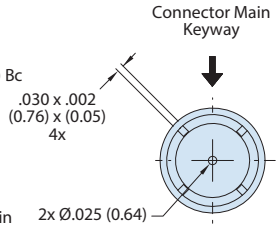

Rear View

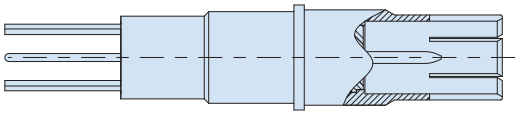

SIZE #8 CO-AX SOCKET, PC TAIL DETAIL
C = Interface Per M39029/59 (50 Ohm)
C1 = Interface Per 852-057 (75 Ohm)

© 2025 Glenair, Inc • 1211 Air Way, Glendale, CA 91201 • 818-247-6000 • www.glenair.com • U.S. CAGE code 06324 •
SuperNine MIL-DTL-38999 Series I Type · Dimensions in Inches (millimeters) are subject to change without notice.

MIL-DTL-38999 Series I Type
231-218 High-speed wall-mount receptacle with standoffs

TWINAX CONTACTS

DIFFERENTIAL TWINAX CONTACT DETAILS

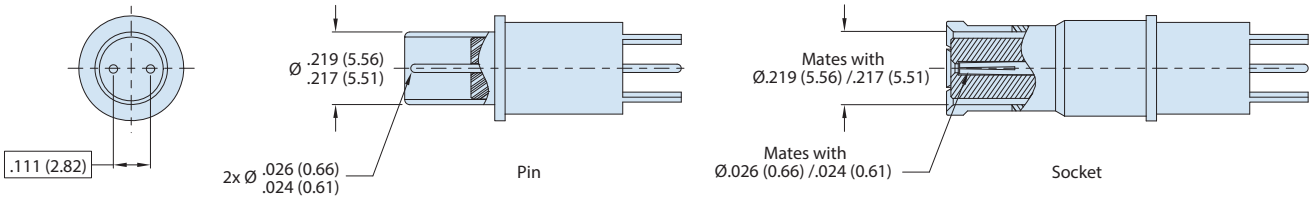

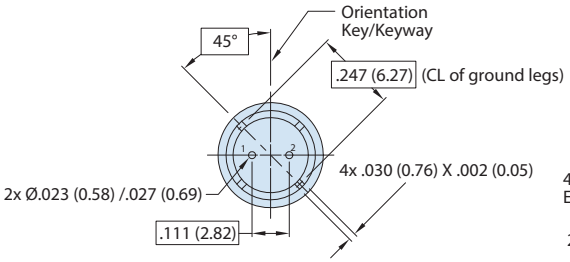

Rear view of differential twinax pin contact (rear) shown. Pin no's are for ref only and shall not be marked.

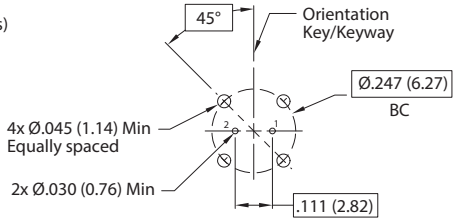

Recommended PC Board Layout
(Pin ID Shown)

MIL-DTL-38999 Series I Type
231-218 High-speed wall-mount receptacle with standoffs

EL OCHITO CONTACTS

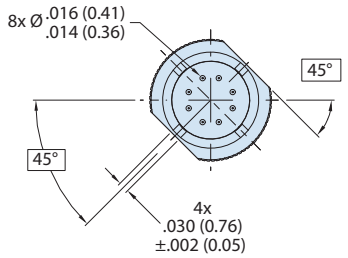

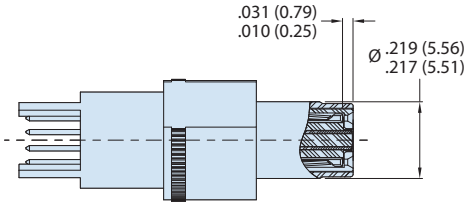

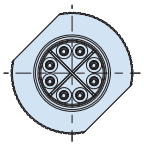

Size #8 El Ochito Pin, PC Tail Detail
White Insert - For Ethernet Applications

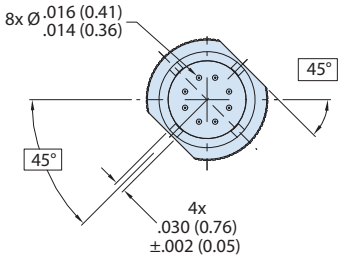

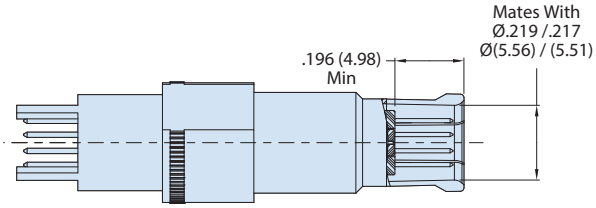

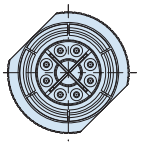

Size #8 El Ochito Socket, PC Tail Detail
White Insert - For Ethernet Applications

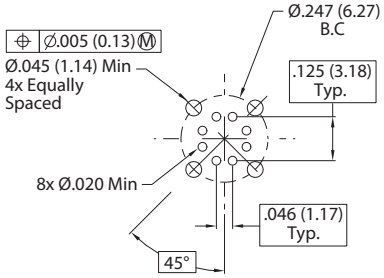

Recommended PC Board Layout
(See Detail A for pin assignment)
For optimal performance, see
Glenair application note AN0002

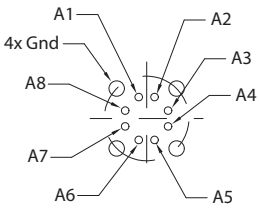

PC Tail Pin Assignment
(For Ochito Pin Contact)

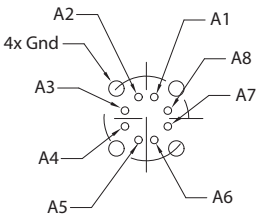

PC Tail Pin Assignment
(For Ochito Skt Contact)

DETAIL A (TYP)

© 2025 Glenair, Inc • 1211 Air Way, Glendale, CA 91201 • 818-247-6000 • www.glenair.com • U.S. CAGE code 06324 •
SuperNine MIL-DTL-38999 Series I Type · Dimensions in Inches (millimeters) are subject to change without notice.

MIL-DTL-38999 Series I Type
231-218 High-speed wall-mount receptacle with standoffs

QUADRAX CONTACTS

QUADRAX CONTACT DETAILS

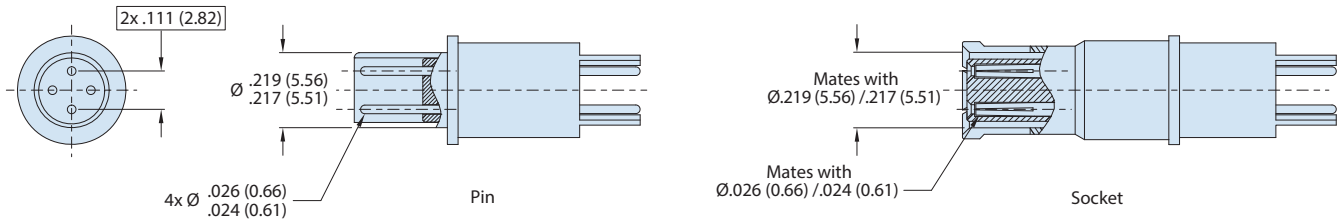

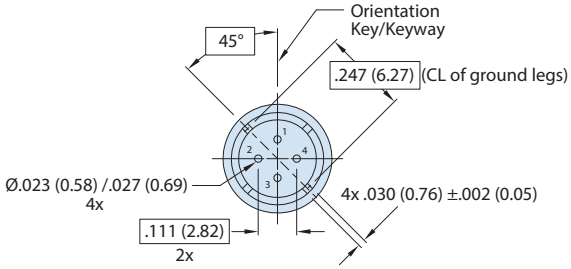

Rear view of differential quadrax pin contact (rear) shown. Pin no's are for ref only and shall not be marked. (Ref: differential pairs: 1 & 3; 2 & 4)

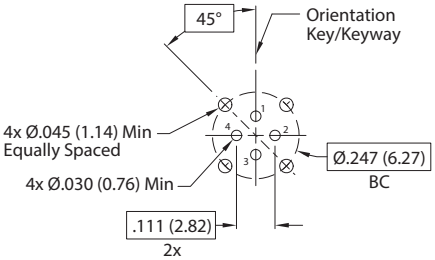

Recommended PC Board Layout (Pin ID shown)

MIL-DTL-38999 Series I Type
231-218 High-speed wall-mount receptacle with standoffs

TRIAX / CONCENTRIC TWINAX CONTACTS

TRIAX / CONCENTRIC TWINAX PIN

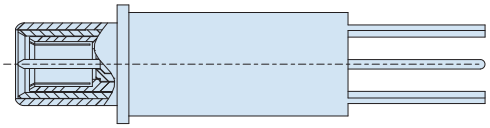

Size #8 Concentric Twinax Pin, Pc Tail Detail
Interface per M39029/90 and/113

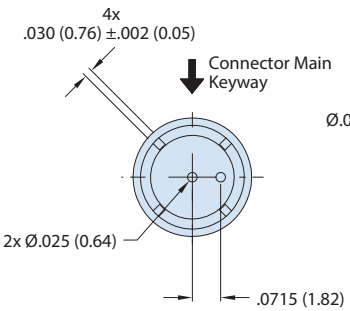

Rear View

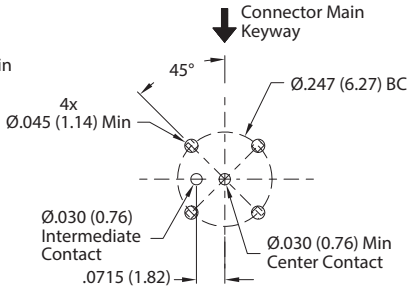

Recommended
Twinax PCB Layout

TRIAX / CONCENTRIC TWINAX SOCKET

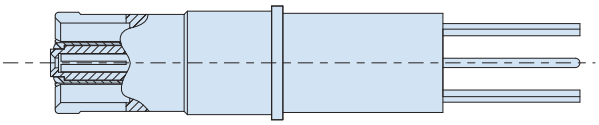

Size #8 Concentric Twinax Socket, PC Tail Detail
Interface per M39029/91 and/114

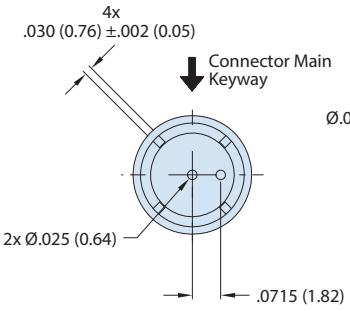

Rear View

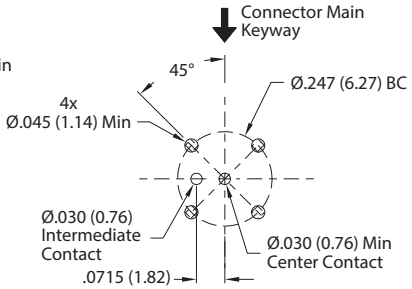

Recommended
Twinax PCB Layout

© 2025 Glenair, Inc • 1211 Air Way, Glendale, CA 91201 • 818-247-6000 • www.glenair.com • U.S. CAGE code 06324 •
SuperNine MIL-DTL-38999 Series I Type · Dimensions in Inches (millimeters) are subject to change without notice.

MIL-DTL-38999 Series I Type
231-218-07 High-speed jam-nut mount receptacle with standoffs

HOW TO ORDER

Sample Part Number	231-218	-07	NF	17	E	-	2	P	N

Basic Part Number	**231-218**
Connector Style	**07** = Receptacle, Jam-nut, Standard Standoff Thread **17** = Receptacle, Jam-nut, Metric Standoff Thread
Material/Finish	(See Table I)
Shell Size	**9, 11, 13, 15, 17, 19, 21, 23, 25**
Contact Type	(See Table V)
Ground Option	**G** = Common Ground **-** = None
Insert Arrangement	PER MIL-STD-1560
Contact Style	**P** = Pin, PC Tail **S** = Socket, PC Tail
Alternate Polarization	**A, B, C, D, N** = Normal

HIGH-SPEED CONNECTORS

"BETTER THAN QPL" FEATURES AND BENEFITS

- Improved, positive-lock, 3-point stainless-steel pin bayonet coupling with outstanding vibration and shock resistance
- Plug ground fingers for advanced EMC
- Glenair Signature tin zinc finish class is RoHS compliant and cadmium compatible
- Precision-machined key/keyway polarization for reliable mismating protection
- Expanded receptacle styles include Clinch-nut and Helicoil mounting, and In-Line configurations
- Scoop-proof design prevents pin damage and short circuits
- Fully tooled for all MIL-STD-1560 insert arrangements
- Contact options include size #22D, #20, #16, and #12 (see High-Speed series for Size #8)
- 500+ mating cycles exceeds MIL-DTL-38999 specification

TABLE I - MATERIAL/FINISH

Sym	Material	Finish
NF	Aluminum Alloy	Cad/O.D. Over Electroless Nickel
MA		Electroless Nickel, Matte
ME		Electroless Nickel
MN		Tri-Nickel Alloy
MT		Nickel-PTFE
TZ		Tin Zinc Over Electroless Nickel
ZR		Zinc Ni, Black (Tri-Valent Cr)
Z1	Stainless Steel (SST)	Passivate
ZL		Electrodeposited Nickel
AB	Marine Bronze (MB)	None (Clean Only)

TABLE V - CONTACT STYLE

SYM	Description
C	Coax, 50 Ohm
C1	Coax, 75 Ohm
D	Differential Twinax
E*	El Ochito
P	Power
Q	Quadrax
T	Triax/Concentric Twinax
OMIT	Per Mil-Std-1560

TABLE IV

Contact Size	PC Tail Øm
NO 23	.020 (0.51) .018 (0.46)
NO 22	.020 (0.51) .018 (0.46)
NO 20	.030 (0.76) .028 (0.71)
NO 16	.040 (1.02) .038 (0.97)
NO 12	.072 (1.83) .070 (1.78)
NO 8	.182 (4.62) .178 (4.52)

POWER SPECIFICATIONS

- Max operating temperature is 200°C finish dependent
- Meets Mil-Spec service rating, insert dependent

MIL-DTL-38999 Series I Type
231-218-07 High-speed jam-nut mount receptacle with standoffs

TABLE VII - OCHITO POSITIONS
B = BLUE, R = RED, W = WHITE

SYM	Contact 1	Contact 2	Contact 3	Contact 4	Contact 5	Contact 6	Contact 7	Contact 8
E	W	W	W	W	W	W	W	W
E2	B	W	W	W	W	W	W	W
E3	R	W	W	W	W	W	W	W
E4	B	B	W	W	W	W	W	W
E5	R	B	W	W	W	W	W	W
E6	R	R	W	W	W	W	W	W
E7	B	B	B	W	W	W	W	W
E8	R	B	B	W	W	W	W	W
E9	R	R	B	W	W	W	W	W
E10	R	R	R	W	W	W	W	W
E11	B	B	B	B	W	W	W	W
E12	R	B	B	B	W	W	W	W
E13	R	R	B	B	W	W	W	W
E14	R	R	R	B	W	W	W	W
E15	R	R	R	R	W	W	W	W
E16	B	B	B	B	B	W	W	W
E17	R	B	B	B	B	W	W	W
E18	R	R	B	B	B	W	W	W
E19	R	R	R	B	B	W	W	W
E20	R	R	R	R	B	W	W	W
E21	R	R	R	R	R	W	W	W
E22	B	B	B	B	B	B	W	W
E23	R	B	B	B	B	B	W	W
E24	R	R	B	B	B	B	W	W
E25	R	R	R	B	B	B	W	W
E26	R	R	R	R	B	B	W	W
E27	R	R	R	R	R	B	W	W
E28	R	R	R	R	R	R	W	W
E29	B	B	B	B	B	B	B	W
E30	R	B	B	B	B	B	B	W
E31	R	R	B	B	B	B	B	W
E32	R	R	R	B	B	B	B	W
E33	R	R	R	R	B	B	B	W
E34	R	R	R	R	R	B	B	W
E35	R	R	R	R	R	R	B	W
E36	R	R	R	R	R	R	R	W
E37	B	B	B	B	B	B	B	B
E38	R	B	B	B	B	B	B	B
E39	R	R	B	B	B	B	B	B
E40	R	R	R	B	B	B	B	B
E41	R	R	R	R	B	B	B	B
E42	R	R	R	R	R	B	B	B
E43	R	R	R	R	R	R	B	B
E44	R	R	R	R	R	R	R	B
E45	R	R	R	R	R	R	R	R

TABLE III - PANEL-MOUNT

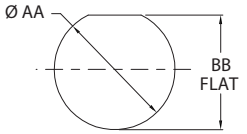

RECOMMENDED PANEL
CUT OUT
(SEE TABLE III)

Size Code	Shell Size	ØAA	BB Flat
A	9	0.703 (17.86) 0.693 (17.60)	0.661 (16.79) 0.654 (16.61)
B	11	0.835 (21.21) 0.825 (20.96)	0.771 (19.58) 0.761 (19.33)
C	13	1.020 (25.91) 1.010 (25.65)	0.955 (24.26) 0.945 (24.00)
D	15	1.145 (29.08) 1.135 (28.83)	1.085 (27.56) 1.075 (27.31)
E	17	1.270 (32.26) 1.260 (32.00)	1.210 (30.73) 1.200 (30.48)
F	19	1.395 (35.43) 1.385 (35.18)	1.335 (33.91) 1.325 (33.66)
G	21	1.520 (38.61) 1.510 (38.35)	1.460 (37.08) 1.450 (36.83)
H	23	1.645 (41.78) 1.635 (41.53)	1.585 (40.26) 1.575 (40.01)
J	25	1.770 (44.96) 1.760 (44.70)	1.710 (43.43) 1.700 (43.18)

TABLE VI - EL OCHITO MATING CONTACT

Mating Part Number		Protocols
WHITE-PIN	858-003	Use for Gb ethernet and 10Gb ethernet protocols
WHITE-SKT	858-004	Use for Gb ethernet and 10Gb ethernet protocols
BLUE-PIN	858-028	Use for USB 3.0 (90 Ohm)
BLUE-SKT	858-029	Use for USB 3.0 (90 Ohm)
RED-PIN	858-030	Use for all high-bandwidth 100 ohm differential lines
RED-SKT	858-031	Use for all high-bandwidth 100 ohm differential lines

EL OCHITO PROTOCOLS

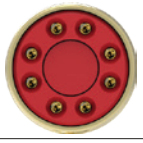

WHITE	BLUE	RED
10GBASE-T	USB 3.0	HDMI, SATA, DisplayPort

The Ochito octaxial contact has a color-coded insulator signifying the data protocol. White is used for 10 Gb Ethernet, blue is used for USB 3.0, and red is used for multi gigabit 100 ohm protocols including HDMI, DisplayPort and SATA. The connector part number includes a protocol code from Table VII. This code determines specific contact position for every combination of protocol.

© 2025 Glenair, Inc • 1211 Air Way, Glendale, CA 91201 • 818-247-6000 • www.glenair.com • U.S. CAGE code 06324 •
SuperNine MIL-DTL-38999 Series I Type · Dimensions in Inches (millimeters) are subject to change without notice.

MIL-DTL-38999 Series I Type
231-218-07 High-speed jam-nut mount receptacle with standoffs

TABLE II - JAM NUT MOUNT

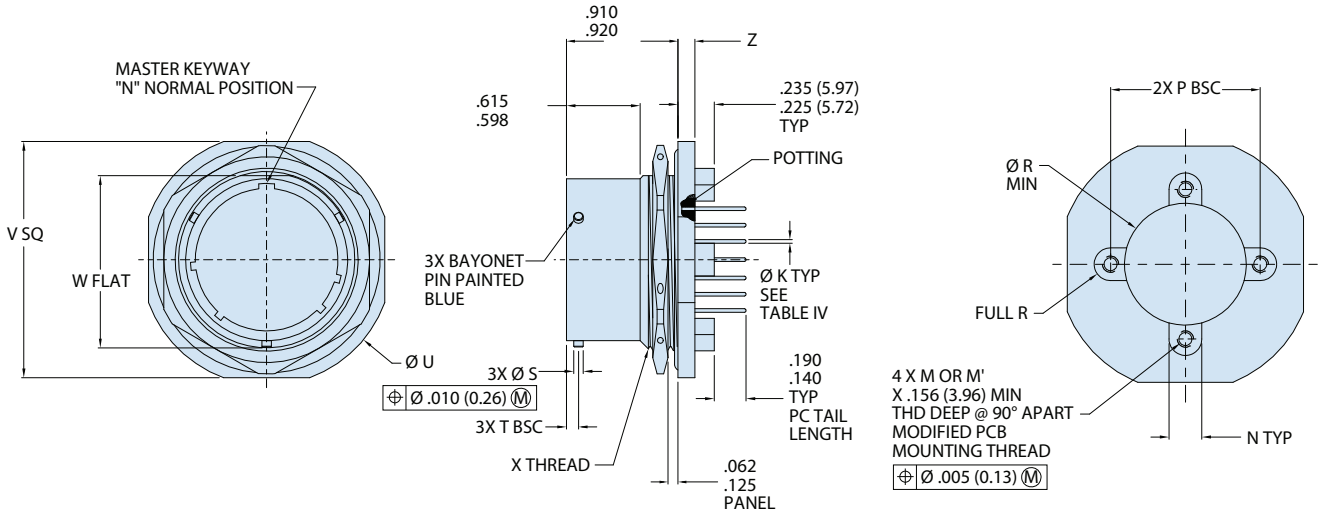

											Threads		Width
Size Code	Shell Size	P Bsc	ØR Min	ØS	T Bsc	ØU	V Sq.	W Flat	X Thread	Z	M	M'	N
A	9	0.594 (15.09)	0.340 (8.64)	.084 (2.13) .076 (1.93)	0.100 (2.54)	1.204 (30.58) 1.172 (29.77)	1.078 (27.38) 1.046 (26.57)	.655 (16.64) .645 (16.38)	.6875-24 UNEF-2A	.120 (3.05) .099 (2.51)	#4-40 UNC-2B	M3 X 0.5	0.150 (3.81)
B	11	0.719 (18.26)	0.468 (11.89)			1.391 (35.33) 1.359 (34.52)	1.266 (32.16) 1.234 (31.34)	.755 (19.18) .745 (18.92)	.8125-20 UNEF-2A				0.175 (4.45)
C	13	0.812 (20.62)	0.572 (14.53)			1.516 (38.51) 1.484 (37.69)	1.391 (35.33) 1.359 (34.52)	.942 (23.93) .932 (23.67)	1.0000-20 UNEF-2A				
D	15	0.906 (23.01)	0.705 (17.91)			1.641 (41.68) 1.609 (40.87)	1.516 (38.51) 1.484 (37.69)	1.066 (27.08) 1.056 (26.82)	1.1250-18 UNEF-2A				0.200 (5.08)
E	17	1.030 (26.16)	0.830 (21.08)			1.766 (44.86) 1.734 (44.04)	1.641 (41.68) 1.609 (40.87)	1.191 (30.25) 1.181 (30.00)	1.2500-18 UNEF-2A				
F	19	1.150 (29.21)	0.934 (23.72)			1.954 (49.63) 1.922 (48.82)	1.828 (46.43) 1.796 (45.62)	1.316 (33.43) 1.306 (33.17)	1.3750-18 UNEF-2A	.151 (3.84) .130 (3.30)			
G	21	1.221 (31.01)	1.055 (26.80)			2.078 (52.78) 2.046 (51.97)	1.954 (49.63) 1.922 (48.82)	1.441 (36.60) 1.431 (36.35)	1.5000-18 UNEF-2A				0.225 (5.72)
H	23	1.360 (34.54)	1.160 (29.46)			2.204 (55.98) 2.172 (55.17)	2.078 (52.78) 2.046 (51.97)	1.566 (39.78) 1.556 (39.52)	1.6250-18 UNEF-2A				
J	25	1.475 (37.47)	1.307 (33.20)	.131 (3.33) .123 (3.12)	0.109 (2.77)	2.328 (59.13) 2.296 (58.32)	2.204 (55.98) 2.172 (55.17)	1.691 (42.95) 1.681 (42.70)	1.7500-18 UNEF-2A				

© 2025 Glenair, Inc • 1211 Air Way, Glendale, CA 91201 • 818-247-6000 • www.glenair.com • U.S. CAGE code 06324 •

MIL-DTL-38999 Series I Type
231-218-07 High-speed jam-nut mount receptacle with standoffs

FIGURE 1 - INSERT ARRANGEMENTS

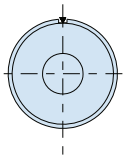

Arrangement 9XG5
(Available only with ground plane option)

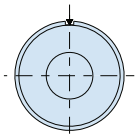

Arrangement 11x-1
1x Size 8

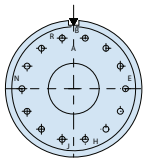

Arrangement 13x-14
1x Size 8
14x Size 23

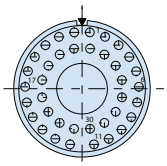

Arrangement 17x-2
1x Size 8
38x Size 22

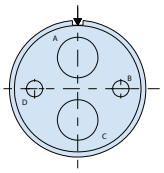

Arrangement 17x-22
(IAW prEN 3645-001)
2x Size 8
2x Size 12

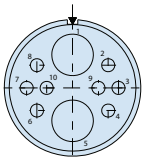

Arrangement 17x-60
2x Size 8
8x Size 22

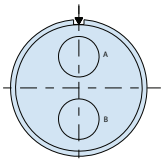

Arrangement 17x-75
(IAW prEN 3645-001)
2x Size 8

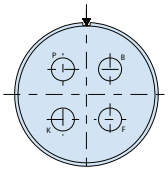

Arrangement 19x-4
4x Size 8

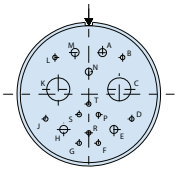

Arrangement 19x-17
10x Size 22d
1x Size 20
4x Size 16
2x Size 8

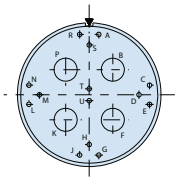

Arrangement 19x-18
14x Size 22d
4x Size 8

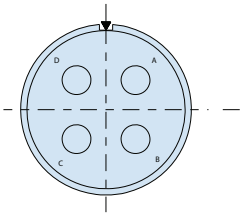

Arrangement 21x-75
4x Size 8

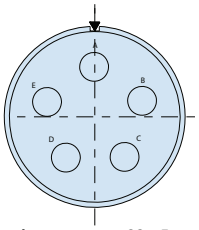

Arrangement 23x-5
(IAW prEN 3645-001)

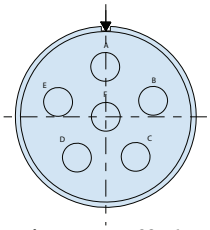

Arrangement 23x-6
(IAW prEN 3645-001)
5x Size 8

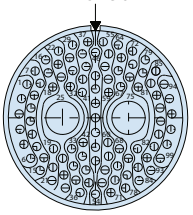

Arrangement 25x-7
97x Size 22
2x Size 8
6x Size 8

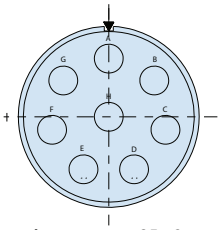

Arrangement 25x-8
8x Size 8

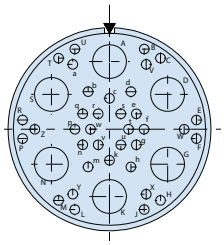

Arrangement 25x-17
36x Size 22

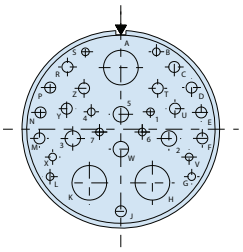

Arrangement 25x-20
(IAW prEN 3645-001)
10x Size 20
13x Size 16
4x Size 12
3x Size 8

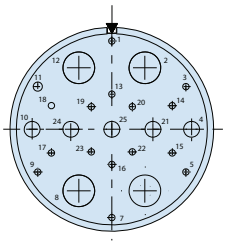

Arrangement 25x-26
(IAW prEN 3645-001)
16x Size 20, 5x Size 12
4x Size 8

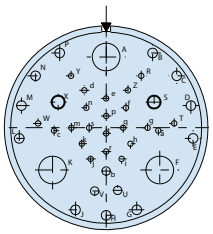

Arrangement 25x-41
22x Size 22d, 3x Size 20
11x Size 16, 2x Size 12
3x Size 8

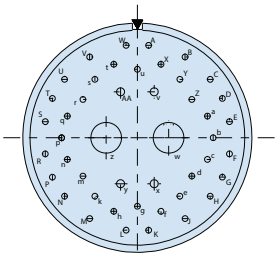

Arrangement 25x-46
40x Size 20
4x Size 16
2x Size 8

Figure 1
Insert arrangements, mating face of pin insert shown.
Replace X with C, D, E, Q or T
(See Table VI)

FIGURE 2 - CONTACT INNER PIN ORIENTATION

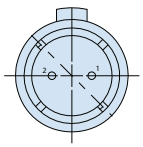

Diferental Twinax

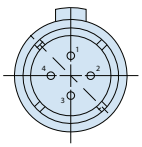

Quadrax

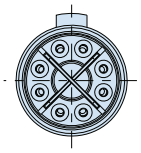

El Ochito

© 2025 Glenair, Inc • 1211 Air Way, Glendale, CA 91201 • 818-247-6000 • www.glenair.com • U.S. CAGE code 06324 •
SuperNine MIL-DTL-38999 Series I Type · Dimensions in Inches (millimeters) are subject to change without notice.

MIL-DTL-38999 Series I Type
231-218-07 High-speed jam-nut mount receptacle with standoffs

TABLE II - JAM-NUT MOUNT

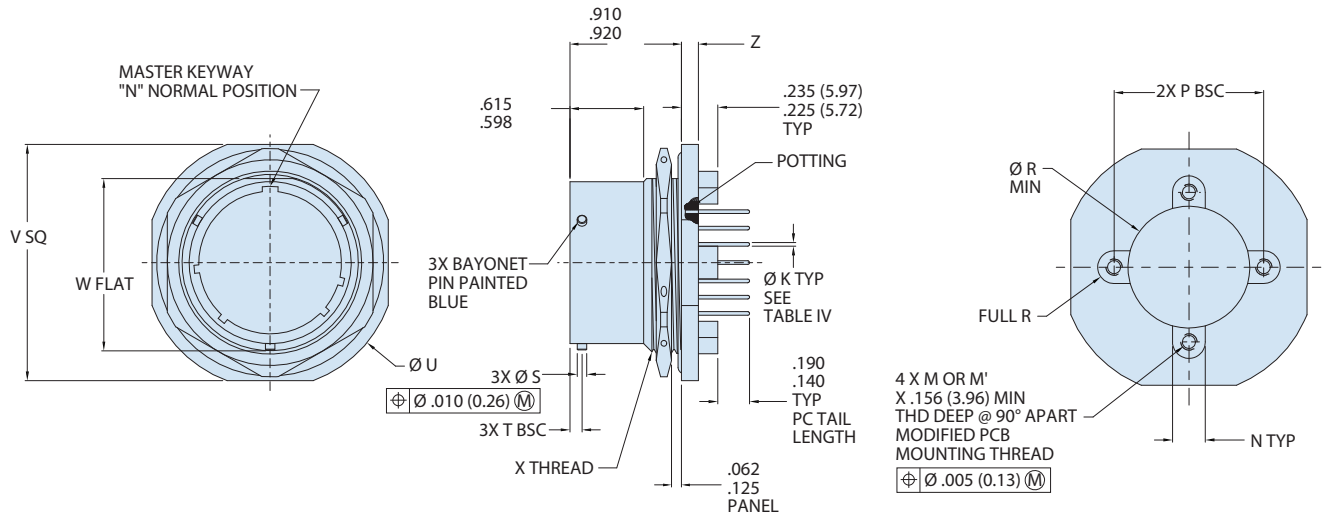

											Threads		Width
Size Code	Shell Size	P Bsc	ØR Min	ØS	T Bsc	ØU	V Sq.	W Flat	X Thread	Z	M	M'	N
A	9	0.594 (15.09)	0.340 (8.64)	.084 (2.13) .076 (1.93)	0.100 (2.54)	1.204 (30.58) 1.172 (29.77)	1.078 (27.38) 1.046 (26.57)	.655 (16.64) .645 (16.38)	.6875-24 UNEF-2A	.120 (3.05) .099 (2.51)	#4-40 UNC-2B	M3 X 0.5	0.150 (3.81)
B	11	0.719 (18.26)	0.468 (11.89)			1.391 (35.33) 1.359 (34.52)	1.266 (32.16) 1.234 (31.34)	.755 (19.18) .745 (18.92)	.8125-20 UNEF-2A				0.175 (4.45)
C	13	0.812 (20.62)	0.572 (14.53)			1.516 (38.51) 1.484 (37.69)	1.391 (35.33) 1.359 (34.52)	.942 (23.93) .932 (23.67)	1.0000-20 UNEF-2A				
D	15	0.906 (23.01)	0.705 (17.91)			1.641 (41.68) 1.609 (40.87)	1.516 (38.51) 1.484 (37.69)	1.066 (27.08) 1.056 (26.82)	1.1250-18 UNEF-2A				0.200 (5.08)
E	17	1.030 (26.16)	0.830 (21.08)			1.766 (44.86) 1.734 (44.04)	1.641 (41.68) 1.609 (40.87)	1.191 (30.25) 1.181 (30.00)	1.2500-18 UNEF-2A				
F	19	1.150 (29.21)	0.934 (23.72)			1.954 (49.63) 1.922 (48.82)	1.828 (46.43) 1.796 (45.62)	1.316 (33.43) 1.306 (33.17)	1.3750-18 UNEF-2A	.151 (3.84) .130 (3.30)			
G	21	1.221 (31.01)	1.055 (26.80)			2.078 (52.78) 2.046 (51.97)	1.954 (49.63) 1.922 (48.82)	1.441 (36.60) 1.431 (36.35)	1.5000-18 UNEF-2A				0.225 (5.72)
H	23	1.360 (34.54)	1.160 (29.46)			2.204 (55.98) 2.172 (55.17)	2.078 (52.78) 2.046 (51.97)	1.566 (39.78) 1.556 (39.52)	1.6250-18 UNEF-2A				
J	25	1.475 (37.47)	1.307 (33.20)	.131 (3.33) .123 (3.12)	0.109 (2.77)	2.328 (59.13) 2.296 (58.32)	2.204 (55.98) 2.172 (55.17)	1.691 (42.95) 1.681 (42.70)	1.7500-18 UNEF-2A				

© 2025 Glenair, Inc • 1211 Air Way, Glendale, CA 91201 • 818-247-6000 • www.glenair.com • U.S. CAGE code 06324 •
SuperNine MIL-DTL-38999 Series I Type · Dimensions in Inches (millimeters) are subject to change without notice.

MIL-DTL-38999 Series I Type
231-218-07 High-speed jam-nut mount receptacle with standoffs

FIGURE 1 - INSERT ARRANGEMENTS

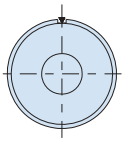

Arrangement 9XG5
(Available only with ground plane option)

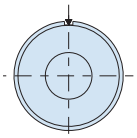

Arrangement 11x-1
1x Size 8

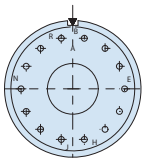

Arrangement 13x-14
1x Size 8
14x Size 23

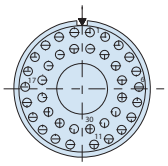

Arrangement 17x-2
1x Size 8
38x Size 22

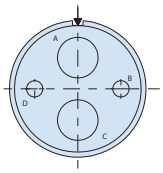

Arrangement 17x-22
(IAW prEN 3645-001)
2x Size 8
2x Size 12

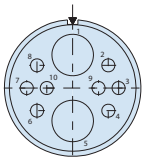

Arrangement 17x-60
2x Size 8
8x Size 22

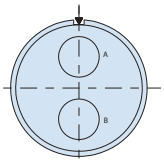

Arrangement 17x-75
(IAW prEN 3645-001)
2x Size 8

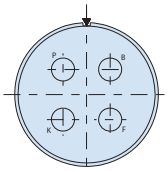

Arrangement 19x-4
4x Size 8

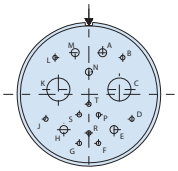

Arrangement 19x-17
10x Size 22d
1x Size 20
4x Size 16
2x Size 8

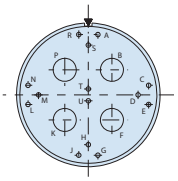

Arrangement 19x-18
14x Size 22d
4x Size 8

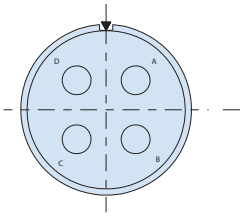

Arrangement 21x-75
4x Size 8

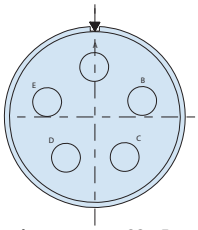

Arrangement 23x-5
(IAW prEN 3645-001)

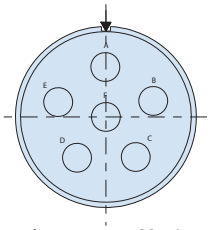

Arrangement 23x-6
(IAW prEN 3645-001)
5x Size 8

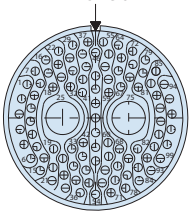

Arrangement 25x-7
97x Size 22
2x Size 8
6x Size 8

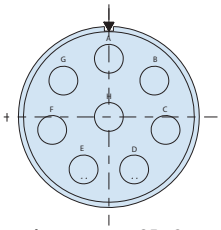

Arrangement 25x-8
8x Size 8

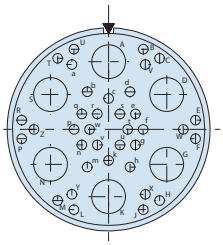

Arrangement 25x-17
36x Size 22

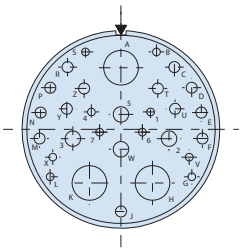

Arrangement 25x-20
(IAW prEN 3645-001)
10x Size 20
13x Size 16
4x Size 12
3x Size 8

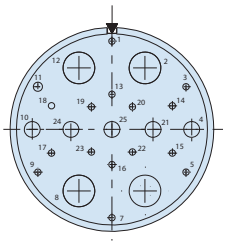

Arrangement 25x-26
(IAW prEN 3645-001)
16x Size 20, 5x Size 12
4x Size 8

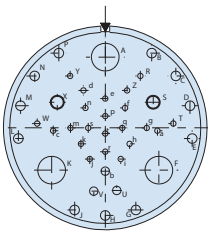

Arrangement 25x-41
22x Size 22d, 3x Size 20
11x Size 16, 2x Size 12
3x Size 8

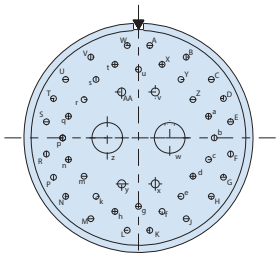

Arrangement 25x-46
40x Size 20
4x Size 16
2x Size 8

Figure 1
Insert arrangements, mating face of pin insert shown.
Replace X with C, D, E, Q or T
(See Table VI)

FIGURE 2 - CONTACT INNER PIN ORIENTATION

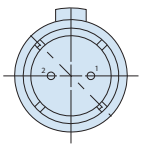

Differential Twinax

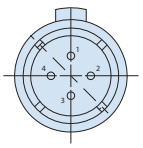

Quadrax

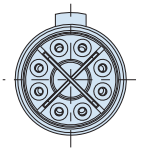

El Ochito

© 2025 Glenair, Inc • 1211 Air Way, Glendale, CA 91201 • 818-247-6000 • www.glenair.com • U.S. CAGE code 06324 •
SuperNine MIL-DTL-38999 Series I Type · Dimensions in Inches (millimeters) are subject to change without notice.

MIL-DTL-38999 Series I Type
231-218-07 High-speed jam-nut mount receptacle with standoffs

COAX CONTACTS

COAX CONTACTS

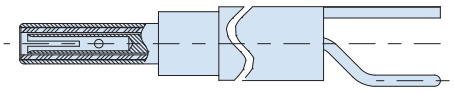

Size #16 Coax Contact, Pin, PC Tail Detail
Interface per M39029/76
Note: Max usable frequency of 700 Mhz

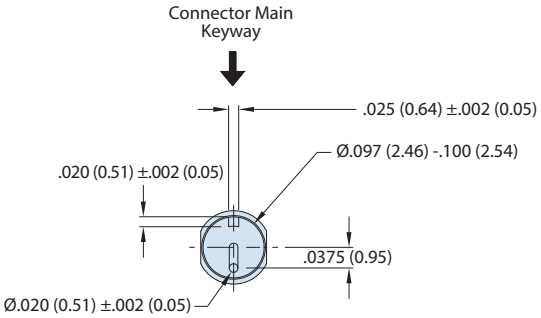

Contact rear view
and interface requirements

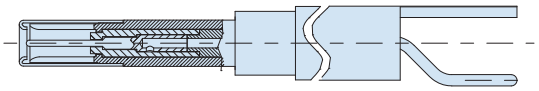

Size #16 Coax Contact, Socket, PC Tail Detail
Interface per M39029/77
Note: Max usable frequency of 700 Mhz

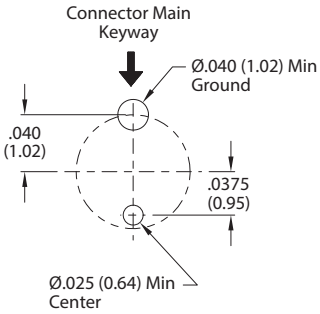

Recommended PCB Footprint

MIL-DTL-38999 Series I Type
231-218-07 High-speed jam-nut mount receptacle with standoffs

COAX CONTACTS

COAX CONTACTS

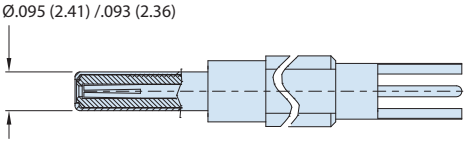

Size #12 Coax Contact Pin, PC Tail Detail
Interface per M39029/102

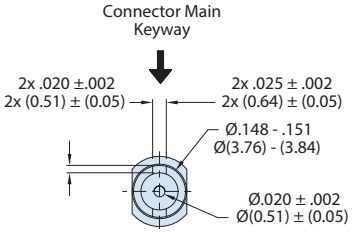

50 Ohm contact rear view
and interface requirements

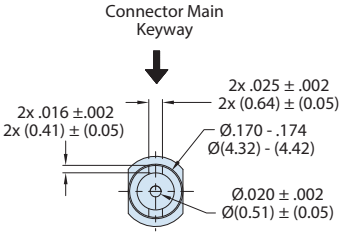

75 Ohm contact rear view
and interface requirements

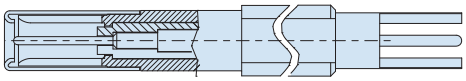

Size #12 Coax Contact Socket, PC Tail Detail
Interface per M39029/103

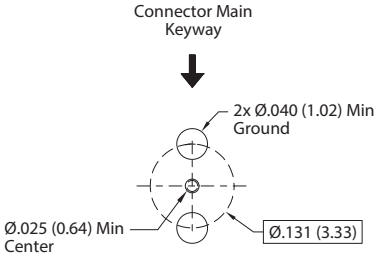

50 Ohm Contact
Recommended PCB Footprint

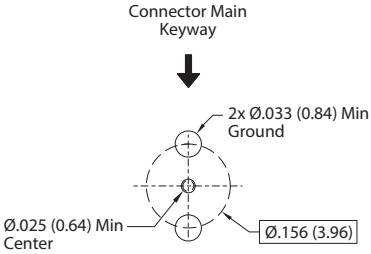

75 Ohm Contact
Recommended PCB Footprint

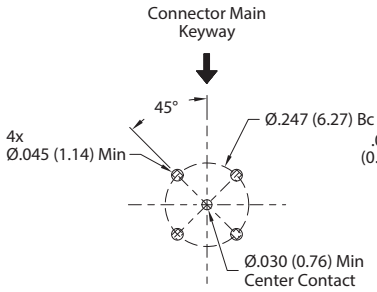

Recommended
Co-ax PCB Layout

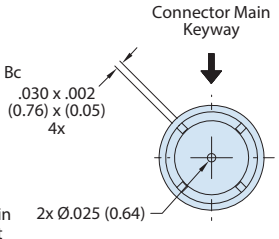

Rear View

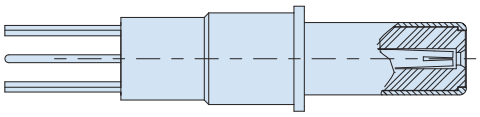

SIZE #8 CO-AX PIN, PC TAIL DETAIL
C = Interface Per M39029/60 (50 Ohm)
C1 = Interface Per 852-056 (75 Ohm)

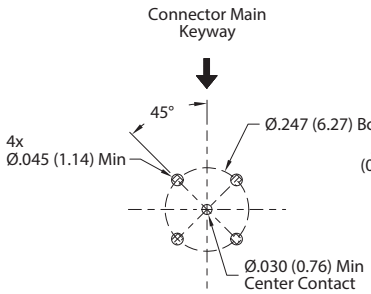

Recommended
Co-ax PCB Layout

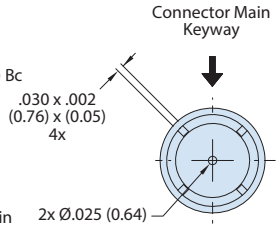

Rear View

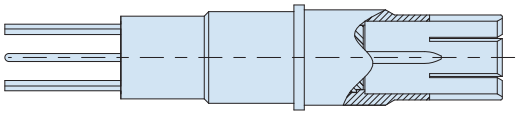

SIZE #8 CO-AX SOCKET, PC TAIL DETAIL
C = Interface Per M39029/59 (50 Ohm)
C1 = Interface Per 852-057 (75 Ohm)

© 2025 Glenair, Inc • 1211 Air Way, Glendale, CA 91201 • 818-247-6000 • www.glenair.com • U.S. CAGE code 06324 •
SuperNine MIL-DTL-38999 Series I Type · Dimensions in Inches (millimeters) are subject to change without notice.

MIL-DTL-38999 Series I Type
231-218-07 High-speed jam-nut mount receptacle with standoffs

TWINAX CONTACTS

DIFFERENTIAL TWINAX CONTACT DETAILS

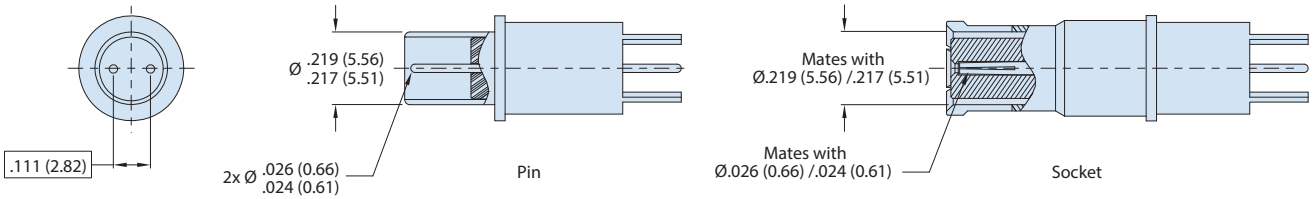

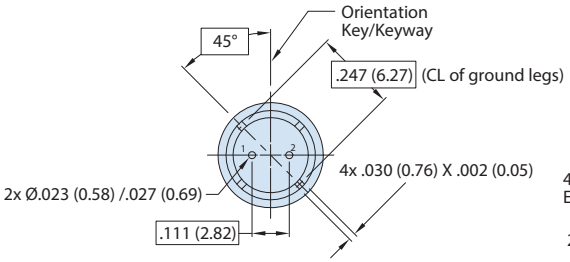

Rear view of differential twinax pin contact (rear) shown. Pin no's are for ref only and shall not be marked.

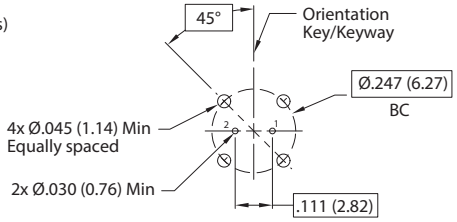

Recommended PC Board Layout
(Pin ID Shown)

MIL-DTL-38999 Series I Type
231-218-07 High-speed jam-nut mount receptacle with standoffs

EL OCHITO CONTACTS

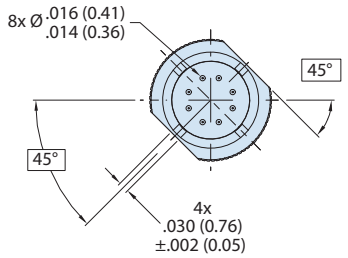

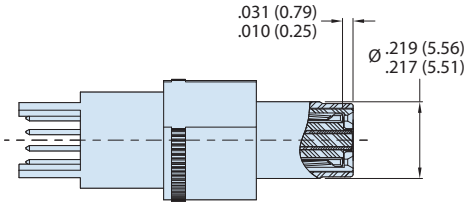

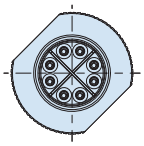

Size #8 El Ochito Pin, PC Tail Detail
White Insert - For Ethernet Applications

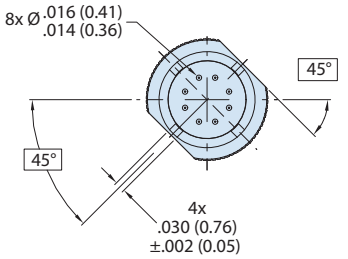

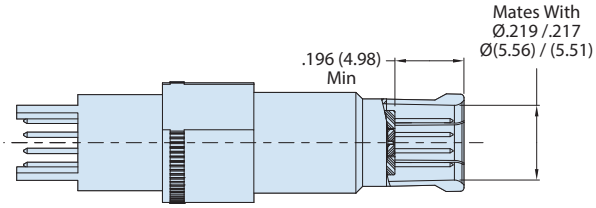

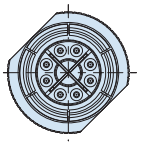

Size #8 El Ochito Socket, PC Tail Detail
White Insert - For Ethernet Applications

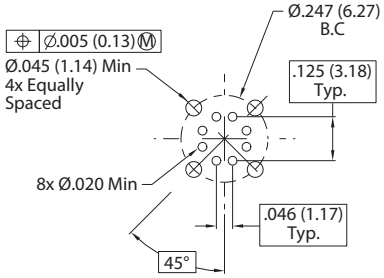

Recommended PC Board Layout
(See Detail A for pin assignment)
For optimal performance, see
Glenair application note AN0002

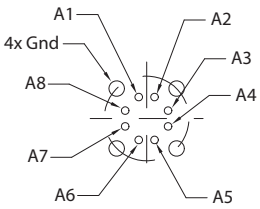

PC Tail Pin Assignment
(For Ochito Pin Contact)

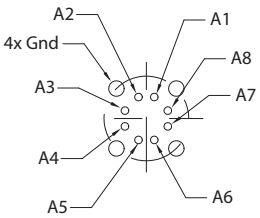

PC Tail Pin Assignment
(For Ochito Skt Contact)

DETAIL A (TYP)

© 2025 Glenair, Inc • 1211 Air Way, Glendale, CA 91201 • 818-247-6000 • www.glenair.com • U.S. CAGE code 06324 •
SuperNine MIL-DTL-38999 Series I Type · Dimensions in Inches (millimeters) are subject to change without notice.

MIL-DTL-38999 Series I Type
231-218-07 High-speed jam-nut mount receptacle with standoffs

QUADRAX CONTACTS

QUADRAX CONTACT DETAILS

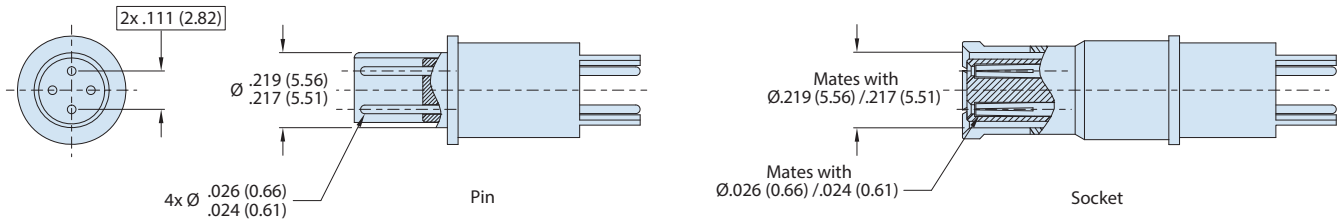

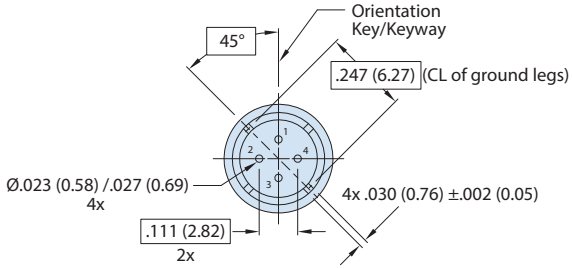

Rear view of differential quadrax pin contact (rear) shown. Pin no's are for ref only and shall not be marked. (Ref: differential pairs: 1 & 3; 2 & 4)

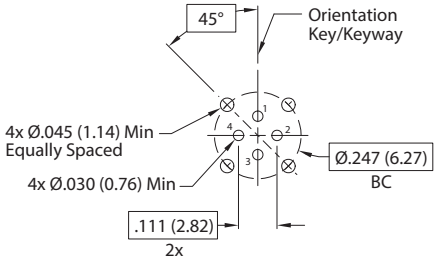

Recommended PC Board Layout (Pin ID shown)

MIL-DTL-38999 Series I Type
231-218-07 High-speed jam-nut mount receptacle with standoffs

TRIAX / CONCENTRIC TWINAX CONTACTS

TRIAX / CONCENTRIC TWINAX PIN

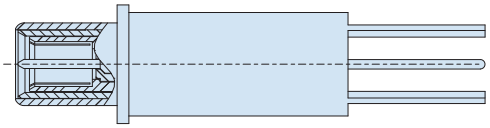

Size #8 Concentric Twinax Pin, Pc Tail Detail
Interface per M39029/90 and/113

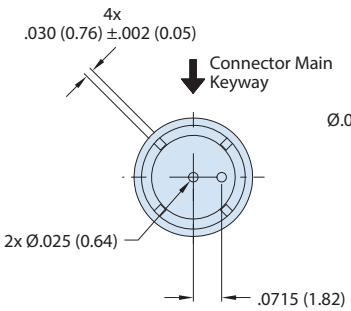

Rear View

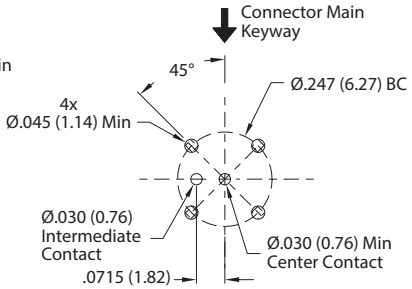

Recommended
Twinax PCB Layout

TRIAX / CONCENTRIC TWINAX SOCKET

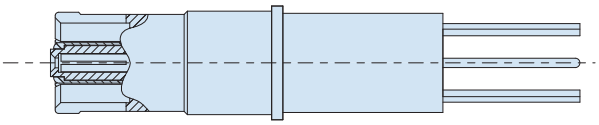

Size #8 Concentric Twinax Socket, PC Tail Detail
Interface per M39029/91 and/114

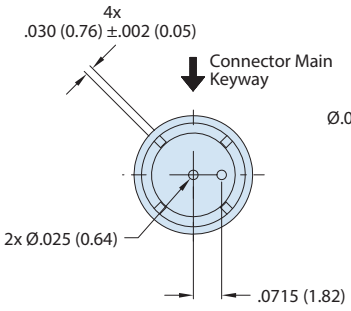

Rear View

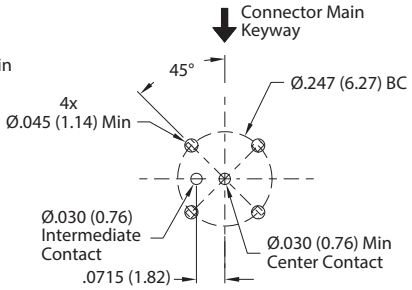

Recommended
Twinax PCB Layout

© 2025 Glenair, Inc • 1211 Air Way, Glendale, CA 91201 • 818-247-6000 • www.glenair.com • U.S. CAGE code 06324 •
SuperNine MIL-DTL-38999 Series I Type · Dimensions in Inches (millimeters) are subject to change without notice.

MIL-DTL-38999 Series I Type
231-225 High-speed wall-mount dual flange receptacle

HOW TO ORDER

Sample Part Number	231-225	-CM	NF	17	E	-	2	P	N

Basic Part Number	**231-225**
Connector Style	(See Table IV)
Material/Finish	(See Table V)
Shell Size	**9**, **11**, **13**, **15**, **17**, **19**, **21**, **23**, **25**
Contact Type	(See Table VI)
Ground Option	**G** = Common Ground **-** = None
Insert Arrangement	PER MIL-STD-1560
Contact Style	**P** = Pin, PC Tail **S** = Socket, PC Tail
Alternate Polarization	**A**, **B**, **C**, **D**, **E**, **N** = Normal

"BETTER THAN QPL" FEATURES AND BENEFITS

- Improved, positive-lock, 3-point stainless-steel pin bayonet coupling with outstanding vibration and shock resistance
- Plug ground fingers for advanced EMC
- Glenair Signature tin zinc finish class is RoHS compliant and cadmium compatible
- Precision-machined key/keyway polarization for reliable mismating protection
- Expanded receptacle styles include Clinch-nut and Helicoil mounting, and In-Line configurations
- Scoop-proof design prevents pin damage and short circuits
- Fully tooled for all MIL-STD-1560 insert arrangements
- Contact options include size #22D, #20, #16, and #12 (see High-Speed series for Size #8)
- 500+ mating cycles exceeds MIL-DTL-38999 specification

POWER SPECIFICATIONS

- Max operating temperature is 200°C finish dependent
- Meets Mil-Spec service rating, insert dependent

TABLE II - MOUNTING HOLES

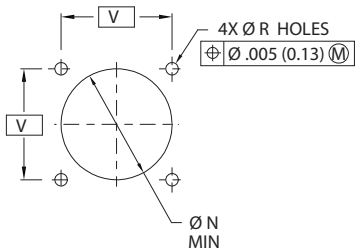

BACK PANEL
RECOMMENDED MOUNTING HOLES

Shell Size Code	Shell Size	ØN Min	ØR Holes	V Bsc
A	9	0.656 (16.66)	.133 (3.38) .123 (3.12)	0.719 (18.26)
B	11	0.796 (20.22)		0.812 (20.62)
C	13	0.922 (23.42)		0.906 (23.01)
D	15	1.047 (26.59)		0.969 (24.61)
E	17	1.219 (30.96)		1.062 (26.97)
F	19	1.297 (32.94)		1.156 (29.36)
G	21	1.422 (36.12)		1.250 (31.75)
H	23	1.547 (39.29)	.159 (4.04) .149 (3.78)	1.375 (34.93)
J	25	1.672 (42.47)	.155 (3.94) .145 (3.68)	1.500 (38.10)

TABLE III

Contact Size	PC Tail Øm
NO 23	.020 (0.51) .018 (0.46)
NO 22	.020 (0.51) .018 (0.46)
NO 20	.030 (0.76) .028 (0.71)
NO 16	.040 (1.02) .038 (0.97)
NO 12	.072 (1.83) .070 (1.78)

TABLE IV - CONNECTOR STYLE

SYM	Description
CM	Receptacle, Wall-mount With Metric Clinch-nuts
CS	Receptacle, Wall-mount With Standard Clinch-nuts
D0	Receptacle, Wall-mount With Thru Holes
D1	Receptacle, Wall-mount With Thru Holes, Metric Stand-Off Thread
HM	Receptacle, Wall-mount With Metric Helicoils
HS	Receptacle, Wall-mount With Standard Helicoils
T0	Receptacle, Wall-mount With Std Tapped Holes (MAT; SST & MB)
T1	Receptacle, Wall-mount With Mtc Tapped Holes (MAT; SST & MB)

© 2025 Glenair, Inc • 1211 Air Way, Glendale, CA 91201 • 818-247-6000 • www.glenair.com • U.S. CAGE code 06324 •

MIL-DTL-38999 Series I Type
231-225 High-speed wall-mount dual flange receptacle

TABLE VII - OCHITO POSITIONS
B = BLUE, R = RED, W = WHITE

SYM	Contact 1	Contact 2	Contact 3	Contact 4	Contact 5	Contact 6	Contact 7	Contact 8
E	W	W	W	W	W	W	W	W
E2	B	W	W	W	W	W	W	W
E3	R	W	W	W	W	W	W	W
E4	B	B	W	W	W	W	W	W
E5	R	B	W	W	W	W	W	W
E6	R	R	W	W	W	W	W	W
E7	B	B	B	W	W	W	W	W
E8	R	B	B	W	W	W	W	W
E9	R	R	B	W	W	W	W	W
E10	R	R	R	W	W	W	W	W
E11	B	B	B	B	W	W	W	W
E12	R	B	B	B	W	W	W	W
E13	R	R	B	B	W	W	W	W
E14	R	R	R	B	W	W	W	W
E15	R	R	R	R	W	W	W	W
E16	B	B	B	B	B	W	W	W
E17	R	B	B	B	B	W	W	W
E18	R	R	B	B	B	W	W	W
E19	R	R	R	B	B	W	W	W
E20	R	R	R	R	B	W	W	W
E21	R	R	R	R	R	W	W	W
E22	B	B	B	B	B	B	W	W
E23	R	B	B	B	B	B	W	W
E24	R	R	B	B	B	B	W	W
E25	R	R	R	B	B	B	W	W
E26	R	R	R	R	B	B	W	W
E27	R	R	R	R	R	B	W	W
E28	R	R	R	R	R	R	W	W
E29	B	B	B	B	B	B	B	W
E30	R	B	B	B	B	B	B	W
E31	R	R	B	B	B	B	B	W
E32	R	R	R	B	B	B	B	W
E33	R	R	R	R	B	B	B	W
E34	R	R	R	R	R	B	B	W
E35	R	R	R	R	R	R	B	W
E36	R	R	R	R	R	R	R	W
E37	B	B	B	B	B	B	B	B
E38	R	B	B	B	B	B	B	B
E39	R	R	B	B	B	B	B	B
E40	R	R	R	B	B	B	B	B
E41	R	R	R	R	B	B	B	B
E42	R	R	R	R	R	B	B	B
E43	R	R	R	R	R	R	B	B
E44	R	R	R	R	R	R	R	B
E45	R	R	R	R	R	R	R	R

TABLE V - MATERIAL/FINISH

Sym	Material	Finish
NF	Aluminum Alloy	Cad/O.D. Over Electroless Nickel
MA		Electroless Nickel, Matte
ME		Electroless Nickel
MN		Tri-Nickel Alloy
MT		Nickel-PTFE
TZ		Tin Zinc Over Electroless Nickel
ZR		Zinc Ni, Black (Tri-Valent Cr)
Z1	Stainless Steel (SST)	Passivate
ZL		Electrodeposited Nickel
AB	Marine Bronze (MB)	None (Clean Only)

TABLE VI - CONTACT STYLE

SYM	Description
C	Coax, 50 Ohm
C1	Coax, 75 Ohm
D	Differential Twinax
E*	El Ochito
P	Power
Q	Quadrax
T	Triax/Concentric Twinax
OMIT	Per Mil-Std-1560

TABLE VIII - EL OCHITO MATING CONTACT

Mating Part Number		Protocols
WHITE-PIN	858-003	Use for Gb ethernet and 10Gb ethernet protocols
WHITE-SKT	858-004	Use for Gb ethernet and 10Gb ethernet protocols
BLUE-PIN	858-028	Use for USB 3.0 (90 Ohm)
BLUE-SKT	858-029	Use for USB 3.0 (90 Ohm)
RED-PIN	858-030	Use for all high-bandwidth 100 ohm differential lines
RED-SKT	858-031	Use for all high-bandwidth 100 ohm differential lines

EL OCHITO PROTOCOLS

WHITE	BLUE	RED
10GBASE-T	USB 3.0	HDMI, SATA, DisplayPort

The Ochito octaxial contact has a color-coded insulator signifying the data protocol. White is used for 10 Gb Ethernet, blue is used for USB 3.0, and red is used for multi gigabit 100 ohm protocols including HDMI, DisplayPort and SATA. The connector part number includes a protocol code from Table VII. This code determines specific contact position for every combination of protocol.

© 2025 Glenair, Inc • 1211 Air Way, Glendale, CA 91201 • 818-247-6000 • www.glenair.com • U.S. CAGE code 06324 •
SuperNine MIL-DTL-38999 Series I Type · Dimensions in Inches (millimeters) are subject to change without notice.

MIL-DTL-38999 Series I Type
231-225 High-speed wall-mount dual flange receptacle

CM - WALL-MOUNT RECEPTACLE

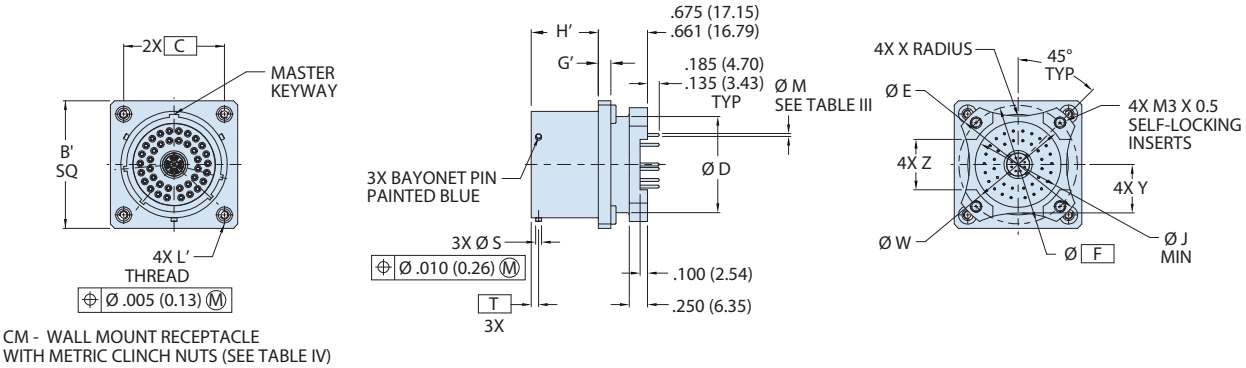

CM - WALL MOUNT RECEPTACLE
WITH METRIC CLINCH NUTS (SEE TABLE IV)

TABLE I

Shell Size Code	Shell Size	B Sq	B' Sq	C Bsc	G	G'	H	H'	ØJ Min	ØK	L Thread	L' Thread	ØS	T Bsc	ØD ±.005	ØE ±.005	ØF Bsc	ØW ±.005	X Rad ±.020	Y ±.020	Z ±.010
A	9	0.948 (24.08) 0.925 (23.50)	1.043 (26.49) 1.003 (25.48)	0.719 (18.26)	.103 (2.62) .077 (1.96)	.153 (3.89) .127 (3.23)	.952 (24.18) .928 (23.57)	.927 (23.55) .903 (22.94)	0.340 (8.64)	.136 (3.45) .120 (3.05)	.112-40 UNC	M3X0.5	.084 (2.13) .076 (1.93)	0.100 (2.54)	0.535 (13.59)	1.016 (25.81)	0.752 (19.10)	0.532 (13.51)	0.225 (5.72)	0.275 (6.99)	0.225 (5.72)
B	11	1.043 (26.49) 1.019 (25.88)	1.136 (28.85) 1.096 (27.84)	0.812 (20.62)					0.468 (11.89)						0.560 (14.22)	1.062 (26.97)	0.850 (21.59)	0.595 (15.11)	0.250 (6.35)	0.290 (7.37)	0.250 (6.35)
C	13	1.137 (28.88) 1.114 (28.30)	1.230 (31.24) 1.190 (30.23)	0.906 (23.01)					0.572 (14.53)						0.700 (17.78)	1.250 (31.75)	0.994 (25.25)	0.720 (18.29)	0.375 (9.53)	0.370 (9.40)	0.250 (6.35)
D	15	1.232 (31.29) 1.208 (30.68)	1.293 (32.84) 1.253 (31.83)	0.969 (24.61)					0.705 (17.91)						0.857 (21.77)	1.375 (34.93)	1.119 (28.42)	0.843 (21.41)	0.438 (11.13)	0.440 (11.18)	0.325 (8.26)
E	17	1.323 (33.60) 1.299 (32.99)	1.386 (35.20) 1.346 (34.19)	1.062 (26.97)					0.830 (21.08)						0.980 (24.89)	1.500 (38.10)	1.237 (31.42)	1.000 (25.40)	0.562 (14.27)	0.495 (12.57)	0.375 (9.53)
F	19	1.449 (36.80) 1.425 (36.20)	1.480 (37.59) 1.440 (36.58)	1.156 (29.36)					0.934 (23.72)						1.060 (26.92)	1.625 (41.28)	1.379 (35.03)	1.125 (28.58)	0.875 (22.23)	0.540 (13.72)	0.500 (12.70)
G	21	1.575 (40.01) 1.551 (39.40)	1.574 (39.98) 1.534 (38.96)	1.250 (31.75)					1.055 (26.80)						1.210 (30.73)	1.750 (44.45)	1.489 (37.82)	1.240 (31.50)	1.170 (29.72)	0.625 (15.88)	0.562 (14.27)
H	23	1.701 (43.21) 1.677 (42.60)	1.759 (44.68) 1.719 (43.66)	1.375 (34.93)	.133 (3.38) .107 (2.72)	.183 (4.65) .157 (3.99)			1.160 (29.46)	.162 (4.11) .146 (3.71)	.138-32 UNC	M4X0.7			1.310 (33.27)	1.875 (47.63)	1.619 (41.12)	1.328 (33.73)	1.250 (31.75)	0.660 (16.76)	0.688 (17.48)
J	25	1.823 (46.30) 1.799 (45.69)	1.884 (47.85) 1.844 (46.84)	1.500 (38.10)					1.307 (33.20)				.131 (3.33) .123 (3.12)	0.109 (2.77)	1.460 (37.08)	2.000 (50.80)	1.744 (44.30)	1.453 (36.91)	1.375 (34.93)	0.740 (18.80)	0.750 (19.05)

© 2025 Glenair, Inc • 1211 Air Way, Glendale, CA 91201 • 818-247-6000 • www.glenair.com • U.S. CAGE code 06324 •

MIL-DTL-38999 Series I Type
231-225 High-speed wall-mount dual flange receptacle

CS - WALL-MOUNT RECEPTACLE

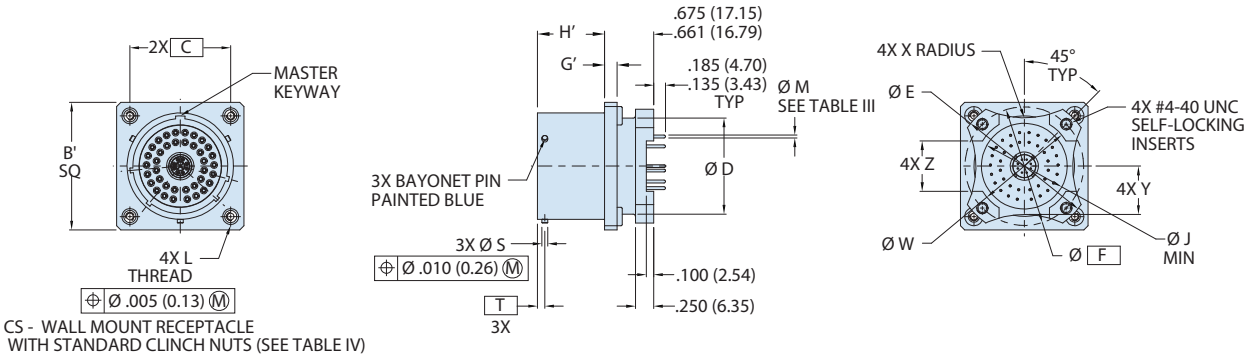

CS - WALL MOUNT RECEPTACLE
WITH STANDARD CLINCH NUTS (SEE TABLE IV)

D0 - WALL-MOUNT RECEPTACLE

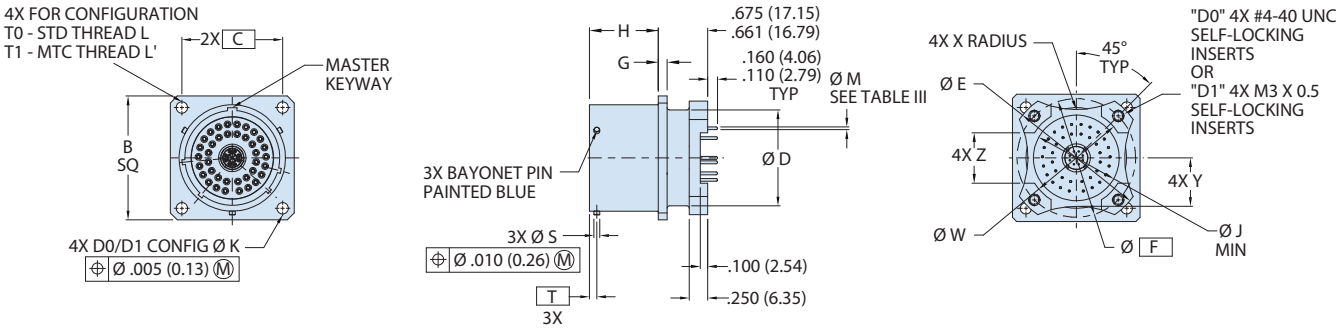

WALL MOUNT RECEPTACLE
D0 - WITH THRU HOLES, STANDARD SELF-LOCKING INSERT
D1 - WITH THRU HOLES, METRIC SELF-LOCKING INSERT (SEE TABLE IV)

OR

T0 - WITH STD TAPPED HOLES AND STANDARD SELF-LOCKING INSERT
T1 - WITH MTC TAPPED HOLES AND METRIC SELF-LOCKING INSERT
(MAT; STAINLESS STEEL AND MARINE BRONZE) (SEE TABLE IV)

© 2025 Glenair, Inc • 1211 Air Way, Glendale, CA 91201 • 818-247-6000 • www.glenair.com • U.S. CAGE code 06324 •
SuperNine MIL-DTL-38999 Series I Type · Dimensions in Inches (millimeters) are subject to change without notice.

MIL-DTL-38999 Series I Type
231-225 High-speed wall-mount dual flange receptacle

HM - WALL-MOUNT RECEPTACLE

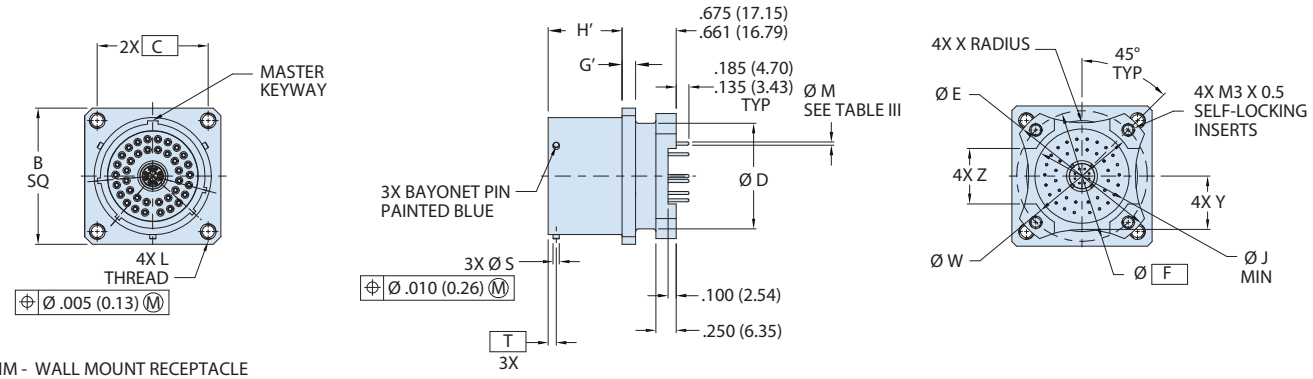

HM - WALL MOUNT RECEPTACLE
WITH METRIC HELICOILS (SEE TABLE IV)

HS - WALL-MOUNT RECEPTACLE

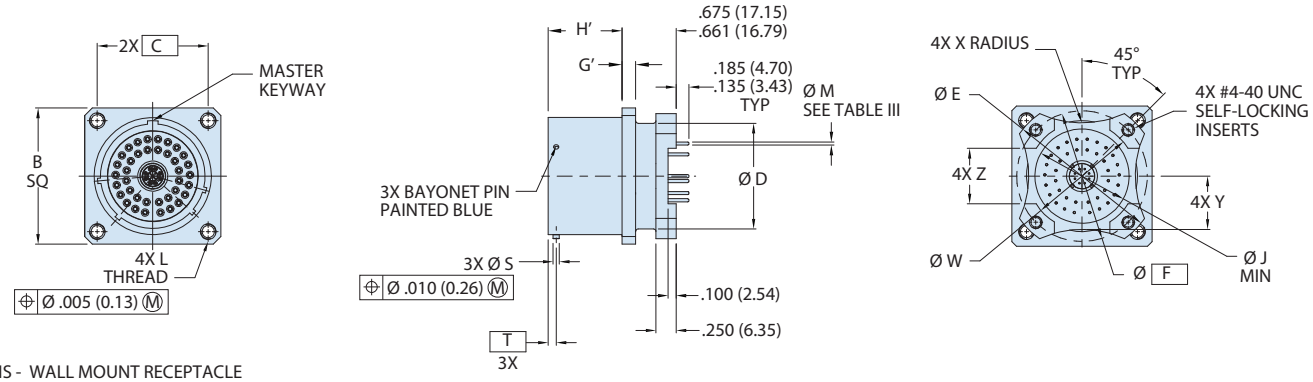

HS - WALL MOUNT RECEPTACLE
WITH STANDARD HELICOILS (SEE TABLE IV)

MIL-DTL-38999 Series I Type
231-225 High-speed wall-mount dual flange receptacle

FIGURE 1 - INSERT ARRANGEMENTS

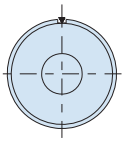

Arrangement 9XG5
(Available only with ground plane option)

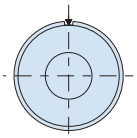

Arrangement 11x-1
1x Size 8

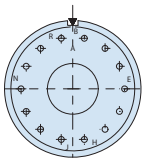

Arrangement 13x-14
1x Size 8
14x Size 23

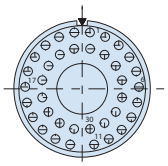

Arrangement 17x-2
1x Size 8
38x Size 22

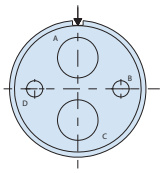

Arrangement 17x-22
(IAW prEN 3645-001)
2x Size 8
2x Size 12

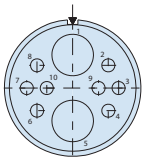

Arrangement 17x-60
2x Size 8
8x Size 22

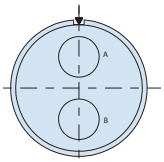

Arrangement 17x-75
(IAW prEN 3645-001)
2x Size 8

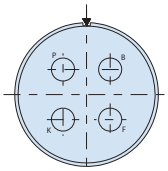

Arrangement 19x-4
4x Size 8

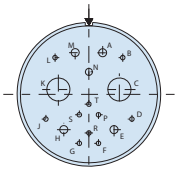

Arrangement 19x-17
10x Size 22d
1x Size 20
4x Size 16
2x Size 8

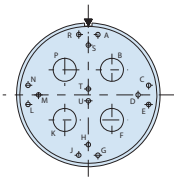

Arrangement 19x-18
14x Size 22d
4x Size 8

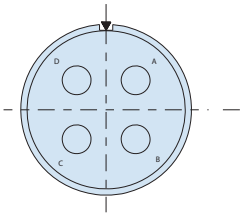

Arrangement 21x-75
4x Size 8

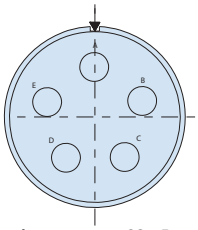

Arrangement 23x-5
(IAW prEN 3645-001)

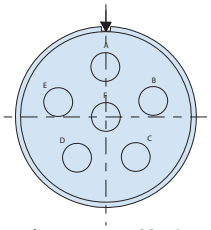

Arrangement 23x-6
(IAW prEN 3645-001)
5x Size 8

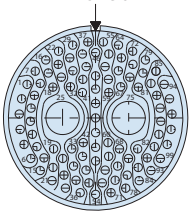

Arrangement 25x-7
97x Size 22
2x Size 8
6x Size 8

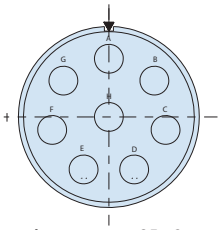

Arrangement 25x-8
8x Size 8

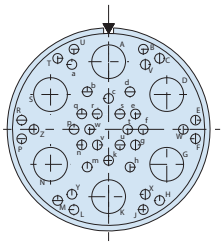

Arrangement 25x-17
36x Size 22

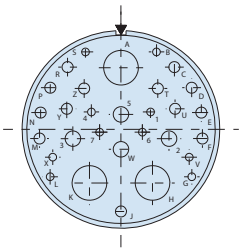

Arrangement 25x-20
(IAW prEN 3645-001)
10x Size 20
13x Size 16
4x Size 12
3x Size 8

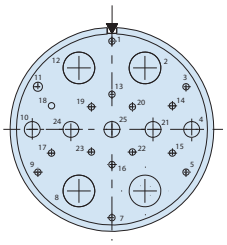

Arrangement 25x-26
(IAW prEN 3645-001)
16x Size 20, 5x Size 12
4x Size 8

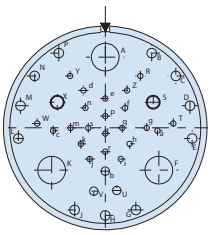

Arrangement 25x-41
22x Size 22d, 3x Size 20
11x Size 16, 2x Size 12
3x Size 8

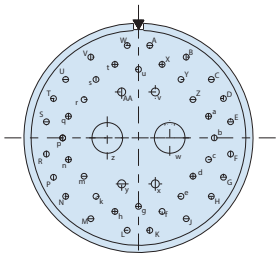

Arrangement 25x-46
40x Size 20
4x Size 16
2x Size 8

Figure 1
Insert arrangements, mating face of pin insert shown.
Replace X with C, D, E, Q or T
(See Table VI)

FIGURE 2 - CONTACT INNER PIN ORIENTATION

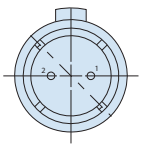

Differential Twinax

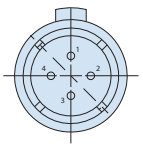

Quadrax

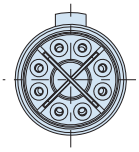

El Ochito

© 2025 Glenair, Inc • 1211 Air Way, Glendale, CA 91201 • 818-247-6000 • www.glenair.com • U.S. CAGE code 06324 •
SuperNine MIL-DTL-38999 Series I Type · Dimensions in Inches (millimeters) are subject to change without notice.

MIL-DTL-38999 Series I Type
231-225 High-speed wall-mount dual flange receptacle

COAX CONTACTS

COAX CONTACTS

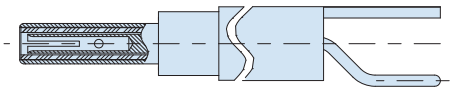

Size #16 Coax Contact, Pin, PC Tail Detail
Interface per M39029/76
Note: Max usable frequency of 700 Mhz

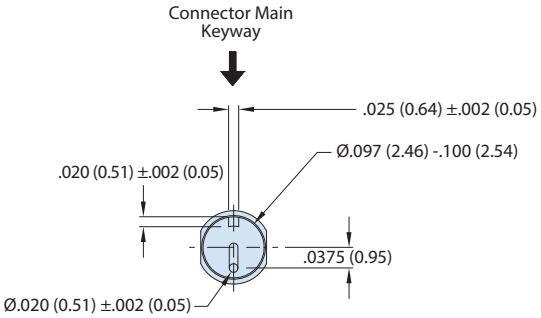

Contact rear view
and interface requirements

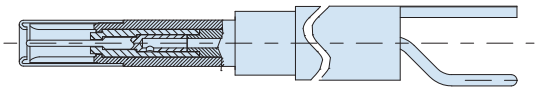

Size #16 Coax Contact, Socket, PC Tail Detail
Interface per M39029/77
Note: Max usable frequency of 700 Mhz

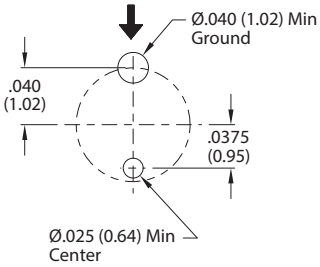

Recommended PCB Footprint

MIL-DTL-38999 Series I Type
231-225 High-speed wall-mount dual flange receptacle

COAX CONTACTS

COAX CONTACTS

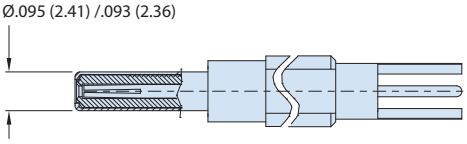

Size #12 Coax Contact Pin, PC Tail Detail
Interface per M39029/102

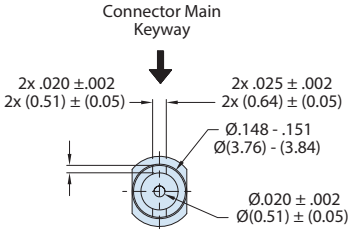

50 Ohm contact rear view
and interface requirements

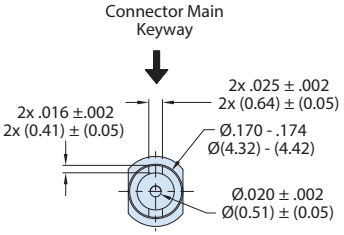

75 Ohm contact rear view
and interface requirements

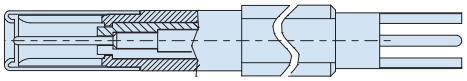

Size #12 Coax Contact Socket, PC Tail Detail
Interface per M39029/103

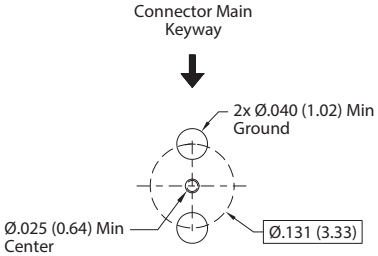

50 Ohm Contact
Recommended PCB Footprint

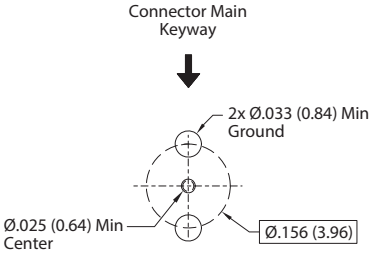

75 Ohm Contact
Recommended PCB Footprint

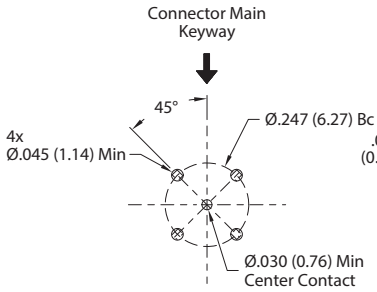

Recommended
Co-ax PCB Layout

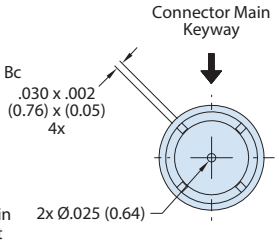

Rear View

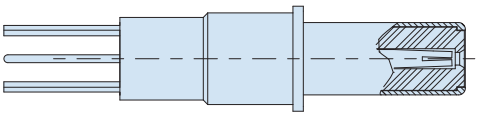

SIZE #8 CO-AX PIN, PC TAIL DETAIL
C = Interface Per M39029/60 (50 Ohm)
C1 = Interface Per 852-056 (75 Ohm)

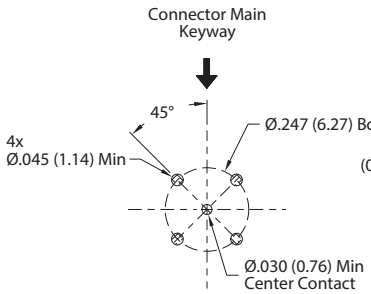

Recommended
Co-ax PCB Layout

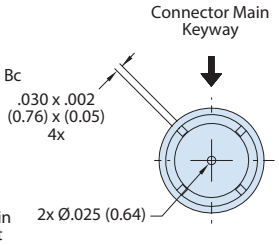

Rear View

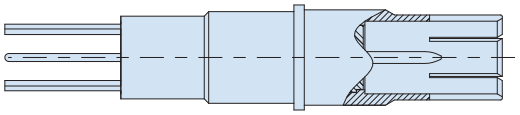

SIZE #8 CO-AX SOCKET, PC TAIL DETAIL
C = Interface Per M39029/59 (50 Ohm)
C1 = Interface Per 852-057 (75 Ohm)

© 2025 Glenair, Inc • 1211 Air Way, Glendale, CA 91201 • 818-247-6000 • www.glenair.com • U.S. CAGE code 06324 •
SuperNine MIL-DTL-38999 Series I Type · Dimensions in Inches (millimeters) are subject to change without notice.

MIL-DTL-38999 Series I Type
231-225 High-speed wall-mount dual flange receptacle

TWINAX CONTACTS

DIFFERENTIAL TWINAX CONTACT DETAILS

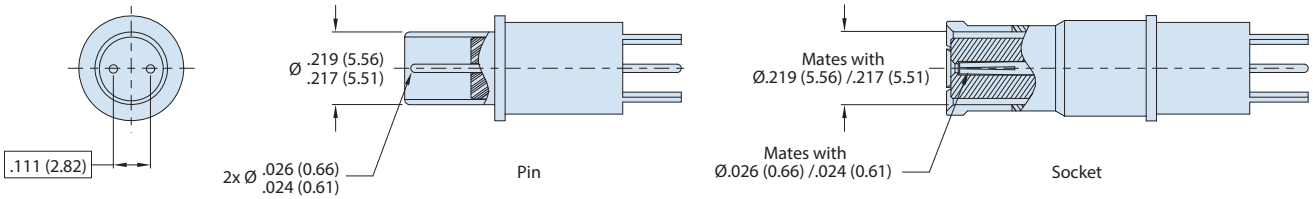

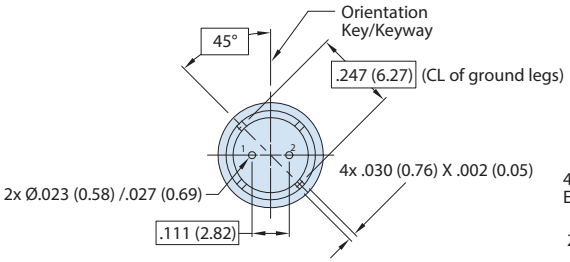

Rear view of differential twinax pin contact (rear) shown. Pin no's are for ref only and shall not be marked.

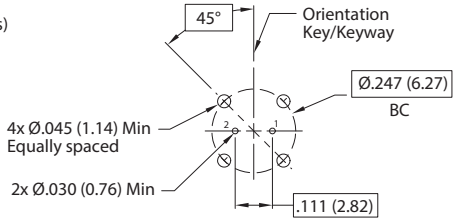

Recommended PC Board Layout
(Pin ID Shown)

MIL-DTL-38999 Series I Type
231-225 High-speed wall-mount dual flange receptacle

EL OCHITO CONTACTS

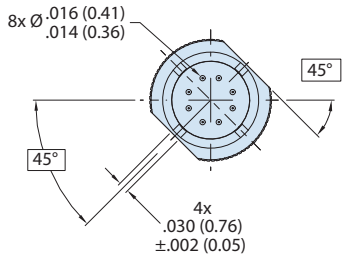

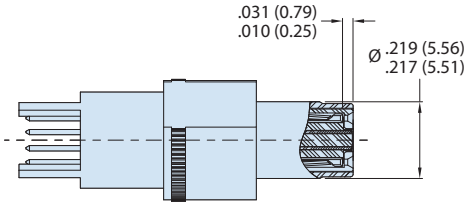

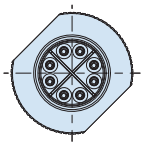

Size #8 El Ochito Pin, PC Tail Detail
White Insert - For Ethernet Applications

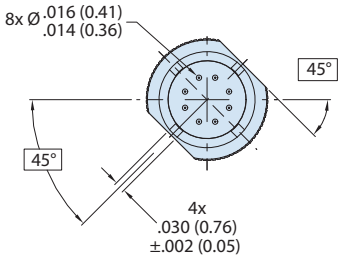

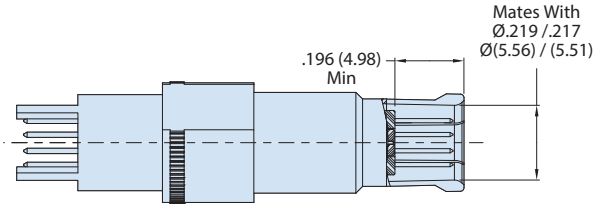

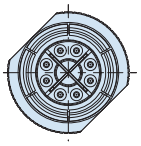

Size #8 El Ochito Socket, PC Tail Detail
White Insert - For Ethernet Applications

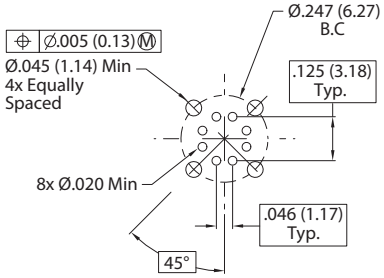

Recommended PC Board Layout
(See Detail A for pin assignment)
For optimal performance, see
Glenair application note AN0002

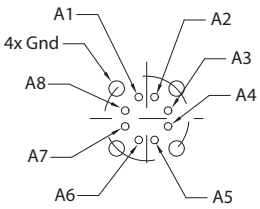

PC Tail Pin Assignment
(For Ochito Pin Contact)

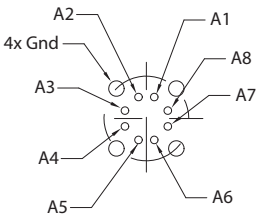

PC Tail Pin Assignment
(For Ochito Skt Contact)

DETAIL A (TYP)

© 2025 Glenair, Inc • 1211 Air Way, Glendale, CA 91201 • 818-247-6000 • www.glenair.com • U.S. CAGE code 06324 •
SuperNine MIL-DTL-38999 Series I Type · Dimensions in Inches (millimeters) are subject to change without notice.

MIL-DTL-38999 Series I Type
231-225 High-speed wall-mount dual flange receptacle

QUADRAX CONTACTS

QUADRAX CONTACT DETAILS

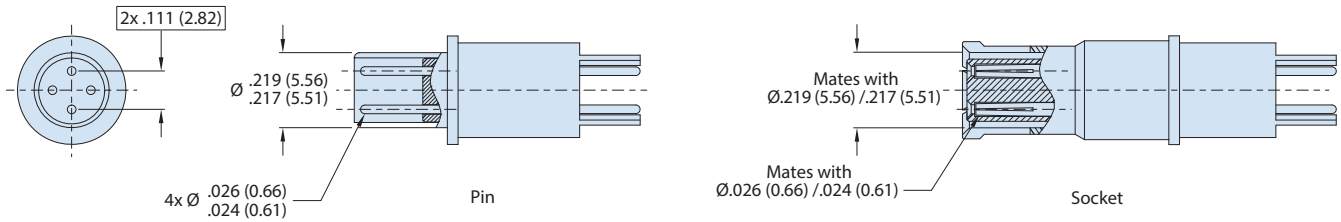

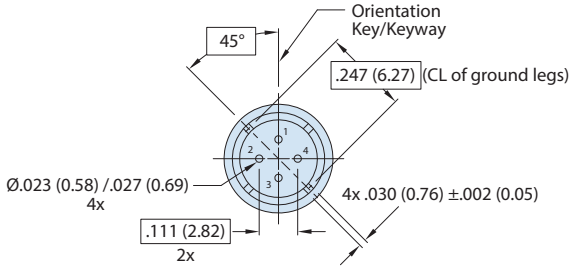

Rear view of differential quadrax pin contact (rear) shown. Pin no's are for ref only and shall not be marked. (Ref: differential pairs: 1 & 3; 2 & 4)

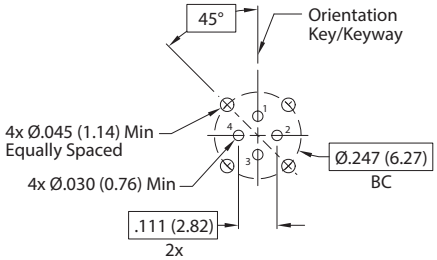

Recommended PC Board Layout (Pin ID shown)

MIL-DTL-38999 Series I Type
231-225 High-speed wall-mount dual flange receptacle

TRIAX / CONCENTRIC TWINAX CONTACTS

TRIAX / CONCENTRIC TWINAX PIN

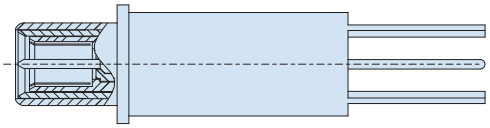

Size #8 Concentric Twinax Pin, Pc Tail Detail
Interface per M39029/90 and/113

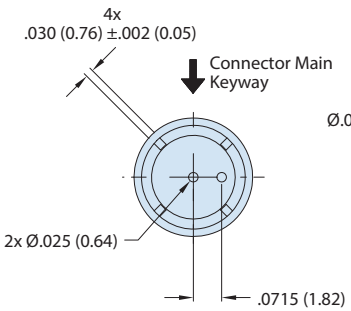

Rear View

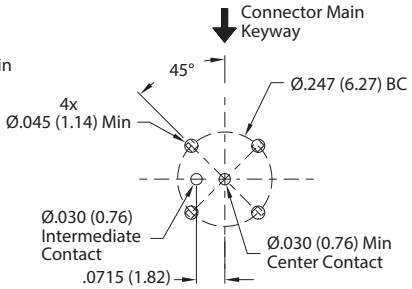

Recommended
Twinax PCB Layout

TRIAX / CONCENTRIC TWINAX SOCKET

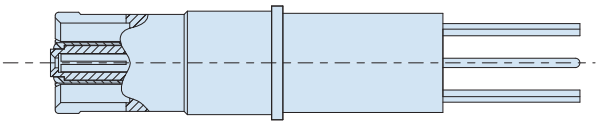

Size #8 Concentric Twinax Socket, PC Tail Detail
Interface per M39029/91 and/114

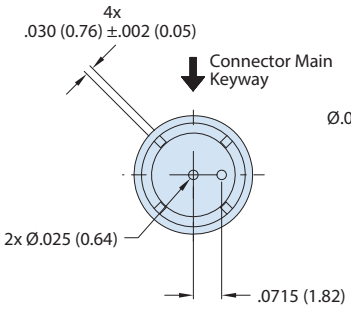

Rear View

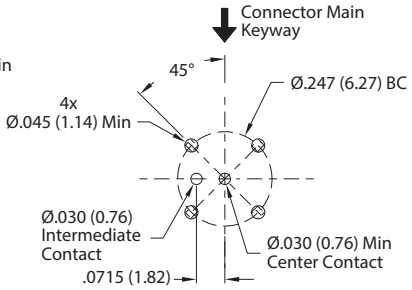

Recommended
Twinax PCB Layout

© 2025 Glenair, Inc • 1211 Air Way, Glendale, CA 91201 • 818-247-6000 • www.glenair.com • U.S. CAGE code 06324 •
SuperNine MIL-DTL-38999 Series I Type · Dimensions in Inches (millimeters) are subject to change without notice.

MIL-DTL-38999 Series I Type
231-225-07 High-speed jam-nut mount dual flange receptacle

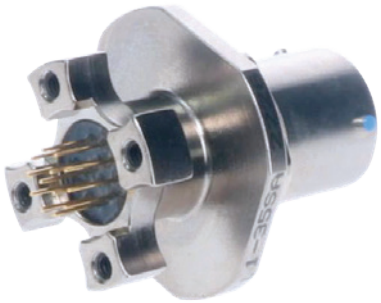

HOW TO ORDER									
Sample Part Number	**231-225**	**-07**	**NF**	**17**	**E**	**-**	**2**	**P**	**N**

Basic Part Number	**231-225**
Connector Style	**07** = Receptacle, Jam-nut, Standard Standoff Thread
Material/Finish	(See Table I)
Shell Size	**9**, **11**, **13**, **15**, **17**, **19**, **21**, **23**, **25**
Contact Type	(See Table V)
Ground Option	**G** = Common Ground **-** = None
Insert Arrangement	PER MIL-STD-1560
Contact Style	**P** = Pin, PC Tail **S** = Socket, PC Tail
Alternate Polarization	**A**, **B**, **C**, **D**, **N** = Normal

HIGH-SPEED CONNECTORS

"BETTER THAN QPL" FEATURES AND BENEFITS

- Improved, positive-lock, 3-point stainless-steel pin bayonet coupling with outstanding vibration and shock resistance
- Plug ground fingers for advanced EMC
- Glenair Signature tin zinc finish class is RoHS compliant and cadmium compatible
- Precision-machined key/keyway polarization for reliable mismating protection
- Expanded receptacle styles include Clinch-nut and Helicoil mounting, and In-Line configurations
- Scoop-proof design prevents pin damage and short circuits
- Fully tooled for all MIL-STD-1560 insert arrangements
- Contact options include size #22D, #20, #16, and #12 (see High-Speed series for Size #8)
- 500+ mating cycles exceeds MIL-DTL-38999 specification

TABLE I - MATERIAL/FINISH

Sym	Material	Finish
NF	Aluminum Alloy	Cad/O.D. Over Electroless Nickel
MA		Electroless Nickel, Matte
ME		Electroless Nickel
MN		Tri-Nickel Alloy
MT		Nickel-PTFE
TZ		Tin Zinc Over Electroless Nickel
ZR		Zinc Ni, Black (Tri-Valent Cr)
Z1	Stainless Steel (SST)	Passivate
ZL		Electrodeposited Nickel
AB	Marine Bronze (MB)	None (Clean Only)

TABLE V - CONTACT STYLE

SYM	Description
C	Coax, 50 Ohm
C1	Coax, 75 Ohm
D	Differential Twinax
E*	El Ochito
P	Power
Q	Quadrax
T	Triax/Concentric Twinax
OMIT	Per Mil-Std-1560

TABLE IV

Contact Size	PC Tail Øm
NO 23	.020 (0.51) .018 (0.46)
NO 22	.020 (0.51) .018 (0.46)
NO 20	.030 (0.76) .028 (0.71)
NO 16	.040 (1.02) .038 (0.97)
NO 12	.072 (1.83) .070 (1.78)
NO 8	.182 (4.62) .178 (4.52)

POWER SPECIFICATIONS

- Max operating temperature is 200°C finish dependent
- Meets Mil-Spec service rating, insert dependent

MIL-DTL-38999 Series I Type
231-225-07 High-speed jam-nut mount dual flange receptacle

HIGH-SPEED CONNECTORS

TABLE VII - OCHITO POSITIONS
B = BLUE, R = RED, W = WHITE

SYM	Contact 1	Contact 2	Contact 3	Contact 4	Contact 5	Contact 6	Contact 7	Contact 8
E	W	W	W	W	W	W	W	W
E2	B	W	W	W	W	W	W	W
E3	R	W	W	W	W	W	W	W
E4	B	B	W	W	W	W	W	W
E5	R	B	W	W	W	W	W	W
E6	R	R	W	W	W	W	W	W
E7	B	B	B	W	W	W	W	W
E8	R	B	B	W	W	W	W	W
E9	R	R	B	W	W	W	W	W
E10	R	R	R	W	W	W	W	W
E11	B	B	B	B	W	W	W	W
E12	R	B	B	B	W	W	W	W
E13	R	R	B	B	W	W	W	W
E14	R	R	R	B	W	W	W	W
E15	R	R	R	R	W	W	W	W
E16	B	B	B	B	B	W	W	W
E17	R	B	B	B	B	W	W	W
E18	R	R	B	B	B	W	W	W
E19	R	R	R	B	B	W	W	W
E20	R	R	R	R	B	W	W	W
E21	R	R	R	R	R	W	W	W
E22	B	B	B	B	B	B	W	W
E23	R	B	B	B	B	B	W	W
E24	R	R	B	B	B	B	W	W
E25	R	R	R	B	B	B	W	W
E26	R	R	R	R	B	B	W	W
E27	R	R	R	R	R	B	W	W
E28	R	R	R	R	R	R	W	W
E29	B	B	B	B	B	B	B	W
E30	R	B	B	B	B	B	B	W
E31	R	R	B	B	B	B	B	W
E32	R	R	R	B	B	B	B	W
E33	R	R	R	R	B	B	B	W
E34	R	R	R	R	R	B	B	W
E35	R	R	R	R	R	R	B	W
E36	R	R	R	R	R	R	R	W
E37	B	B	B	B	B	B	B	B
E38	R	B	B	B	B	B	B	B
E39	R	R	B	B	B	B	B	B
E40	R	R	R	B	B	B	B	B
E41	R	R	R	R	B	B	B	B
E42	R	R	R	R	R	B	B	B
E43	R	R	R	R	R	R	B	B
E44	R	R	R	R	R	R	R	B
E45	R	R	R	R	R	R	R	R

TABLE III - PANEL-MOUNT

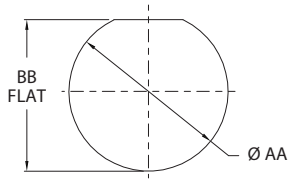

RECOMMENDED PANEL CUT-OUT

Size Code	Shell Size	ØAA	BB Flat
A	9	0.703 (17.86) 0.693 (17.60)	0.661 (16.79) 0.654 (16.61)
B	11	0.835 (21.21) 0.825 (20.96)	0.771 (19.58) 0.761 (19.33)
C	13	1.020 (25.91) 1.010 (25.65)	0.955 (24.26) 0.945 (24.00)
D	15	1.145 (29.08) 1.135 (28.83)	1.085 (27.56) 1.075 (27.31)
E	17	1.270 (32.26) 1.260 (32.00)	1.210 (30.73) 1.200 (30.48)
F	19	1.395 (35.43) 1.385 (35.18)	1.335 (33.91) 1.325 (33.66)
G	21	1.520 (38.61) 1.510 (38.35)	1.460 (37.08) 1.450 (36.83)
H	23	1.645 (41.78) 1.635 (41.53)	1.585 (40.26) 1.575 (40.01)
J	25	1.770 (44.96) 1.760 (44.70)	1.710 (43.43) 1.700 (43.18)

TABLE VI - EL OCHITO MATING CONTACT

Mating Part Number		Protocols
WHITE-PIN	858-003	Use for Gb ethernet and 10Gb ethernet protocols
WHITE-SKT	858-004	Use for Gb ethernet and 10Gb ethernet protocols
BLUE-PIN	858-028	Use for USB 3.0 (90 Ohm)
BLUE-SKT	858-029	Use for USB 3.0 (90 Ohm)
RED-PIN	858-030	Use for all high-bandwidth 100 ohm differential lines
RED-SKT	858-031	Use for all high-bandwidth 100 ohm differential lines

EL OCHITO PROTOCOLS

WHITE	BLUE	RED
10GBASE-T	USB 3.0	HDMI, SATA, DisplayPort

The Ochito octaxial contact has a color-coded insulator signifying the data protocol. White is used for 10 Gb Ethernet, blue is used for USB 3.0, and red is used for multi gigabit 100 ohm protocols including HDMI, DisplayPort and SATA. The connector part number includes a protocol code from Table VII. This code determines specific contact position for every combination of protocol.

© 2025 Glenair, Inc • 1211 Air Way, Glendale, CA 91201 • 818-247-6000 • www.glenair.com • U.S. CAGE code 06324 •
SuperNine MIL-DTL-38999 Series I Type · Dimensions in Inches (millimeters) are subject to change without notice.

MIL-DTL-38999 Series I Type
231-225-07 High-speed jam-nut mount dual flange receptacle

TABLE II

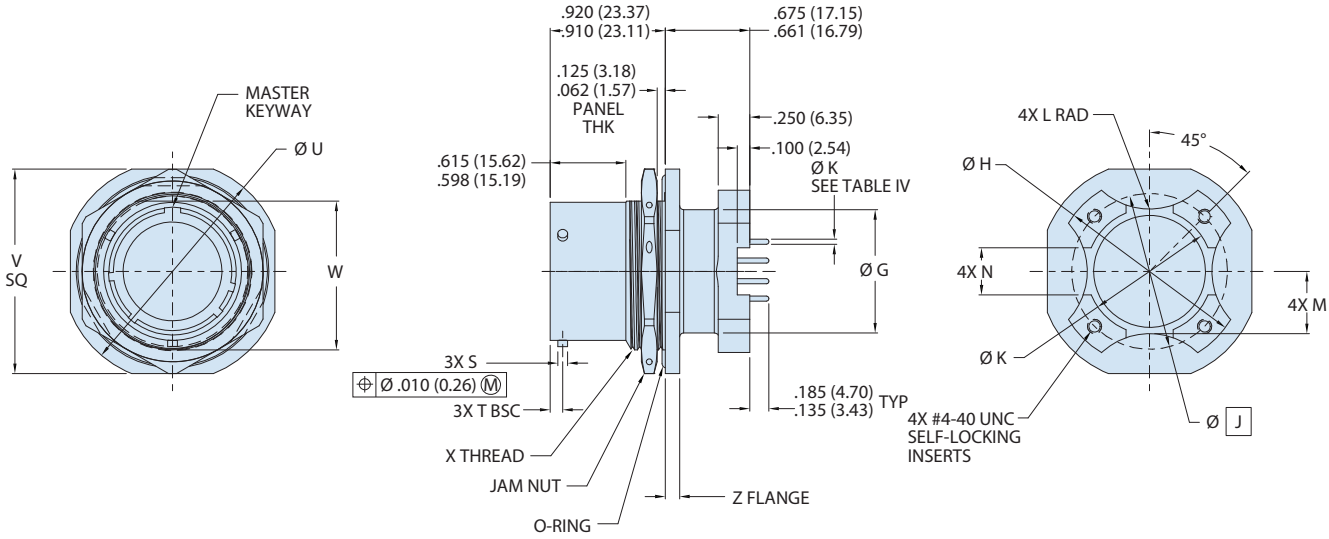

Shell Size Code	Shell Size	Ø S	Ø T Bsc	Ø U	V Sq	W Flat	X Thread	Z	ØG ±.005	ØH ±.005	ØJ Bsc	ØK ±.005	L Rad ±.020	M ±.020	N ±.010
A	9	0.084 (2.13) 0.076 (1.93)	0.100 (2.54)	1.204 (30.58) 1.172 (29.77)	1.078 (27.38) 1.046 (26.57)	0.655 (16.64) 0.645 (16.38)	.6875-24 UNEF-2A	.120 (3.05) .099 (2.51)	0.535 (13.59)	1.016 (25.81)	0.752 (19.10)	0.532 (13.51)	0.225 (5.72)	0.275 (6.99)	0.225 (5.72)
B	11			1.391 (35.33) 1.359 (34.52)	1.266 (32.16) 1.234 (31.34)	0.755 (19.18) 0.745 (18.92)	.8125-20 UNEF-2A		0.560 (14.22)	1.062 (26.97)	0.850 (21.59)	0.595 (15.11)	0.250 (6.35)	0.290 (7.37)	0.250 (6.35)
C	13			1.516 (38.51) 1.484 (37.69)	1.391 (35.33) 1.359 (34.52)	0.942 (23.93) 0.932 (23.67)	1.0000-20 UNEF-2A		0.700 (17.78)	1.250 (31.75)	0.994 (25.25)	0.720 (18.29)	0.375 (9.53)	0.370 (9.40)	0.250 (6.35)
D	15			1.641 (41.68) 1.609 (40.87)	1.516 (38.51) 1.484 (37.69)	1.066 (27.08) 1.056 (26.82)	1.1250-18 UNEF-2A		0.857 (21.77)	1.375 (34.93)	1.119 (28.42)	0.843 (21.41)	0.438 (11.13)	0.440 (11.18)	0.325 (8.26)
E	17			1.766 (44.86) 1.734 (44.04)	1.641 (41.68) 1.609 (40.87)	1.191 (30.25) 1.181 (30.00)	1.2500-18 UNEF-2A		0.980 (24.89)	1.500 (38.10)	1.237 (31.42)	1.000 (25.40)	0.562 (14.27)	0.495 (12.57)	0.375 (9.53)
F	19			1.954 (49.63) 1.922 (48.82)	1.828 (46.43) 1.796 (45.62)	1.316 (33.43) 1.306 (33.17)	1.3750-18 UNEF-2A	.151 (3.84) .130 (3.30)	1.060 (26.92)	1.625 (41.28)	1.379 (35.03)	1.125 (28.58)	0.875 (22.23)	0.540 (13.72)	0.500 (12.70)
G	21			2.078 (52.78) 2.046 (51.97)	1.954 (49.63) 1.922 (48.82)	1.441 (36.60) 1.431 (36.35)	1.5000-18 UNEF-2A		1.210 (30.73)	1.750 (44.45)	1.489 (37.82)	1.240 (31.50)	1.170 (29.72)	0.625 (15.88)	0.562 (14.27)
H	23			2.204 (55.98) 2.172 (55.17)	2.078 (52.78) 2.046 (51.97)	1.566 (39.78) 1.556 (39.52)	1.6250-18 UNEF-2A		1.310 (33.27)	1.875 (47.63)	1.619 (41.12)	1.328 (33.73)	1.250 (31.75)	0.660 (16.76)	0.688 (17.48)
J	25	0.131 (3.33) 0.123 (3.12)	0.109 (2.77)	2.328 (59.13) 2.296 (58.32)	2.204 (55.98) 2.172 (55.17)	1.691 (42.95) 1.681 (42.70)	1.7500-18 UNEF-2A		1.460 (37.08)	2.000 (50.80)	1.744 (44.30)	1.453 (36.91)	1.375 (34.93)	0.740 (18.80)	0.750 (19.05)

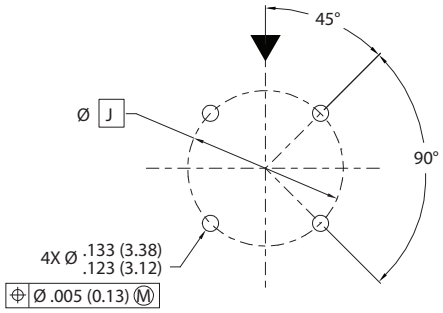

RECOMMENDED PCB MOUNTING HOLE LOCATIONS

MIL-DTL-38999 Series I Type
231-225-07 High-speed jam-nut mount dual flange receptacle

FIGURE 1 - INSERT ARRANGEMENTS

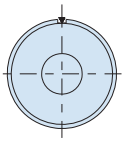

Arrangement 9XG5
(Available only with ground plane option)

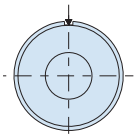

Arrangement 11x-1
1x Size 8

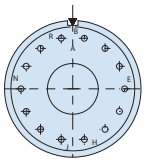

Arrangement 13x-14
1x Size 8
14x Size 23

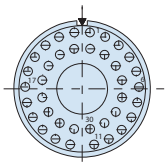

Arrangement 17x-2
1x Size 8
38x Size 22

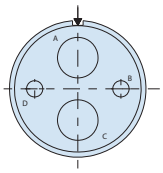

Arrangement 17x-22
(IAW prEN 3645-001)
2x Size 8
2x Size 12

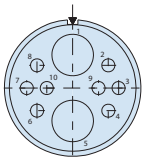

Arrangement 17x-60
2x Size 8
8x Size 22

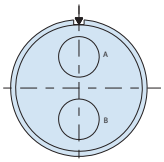

Arrangement 17x-75
(IAW prEN 3645-001)
2x Size 8

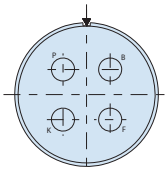

Arrangement 19x-4
4x Size 8

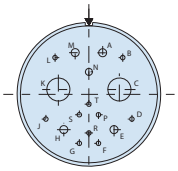

Arrangement 19x-17
10x Size 22d
1x Size 20
4x Size 16
2x Size 8

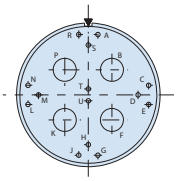

Arrangement 19x-18
14x Size 22d
4x Size 8

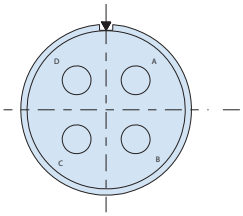

Arrangement 21x-75
4x Size 8

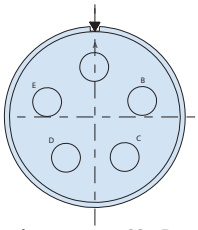

Arrangement 23x-5
(IAW prEN 3645-001)

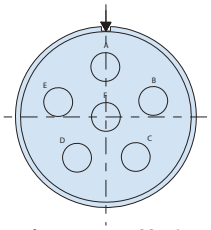

Arrangement 23x-6
(IAW prEN 3645-001)
5x Size 8

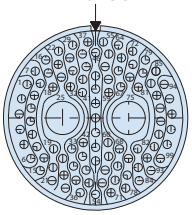

Arrangement 25x-7
97x Size 22
2x Size 8
6x Size 8

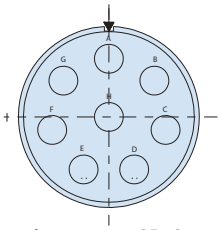

Arrangement 25x-8
8x Size 8

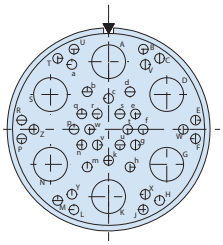

Arrangement 25x-17
36x Size 22

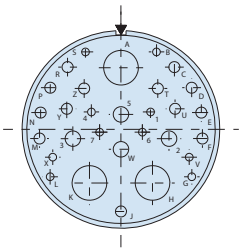

Arrangement 25x-20
(IAW prEN 3645-001)
10x Size 20
13x Size 16
4x Size 12
3x Size 8

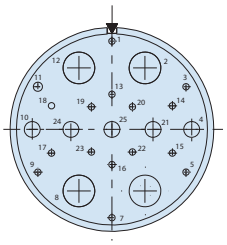

Arrangement 25x-26
(IAW prEN 3645-001)
16x Size 20, 5x Size 12
4x Size 8

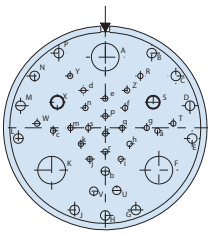

Arrangement 25x-41
22x Size 22d, 3x Size 20
11x Size 16, 2x Size 12
3x Size 8

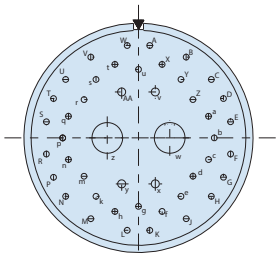

Arrangement 25x-46
40x Size 20
4x Size 16
2x Size 8

Figure 1
Insert arrangements, mating face of pin insert shown.
Replace X with C, D, E, Q or T
(See Table VI)

FIGURE 2 - CONTACT INNER PIN ORIENTATION

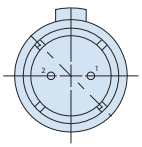

Differential Twinax

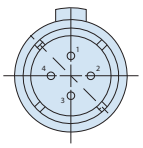

Quadrax

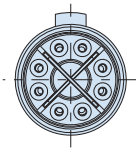

El Ochito

© 2025 Glenair, Inc • 1211 Air Way, Glendale, CA 91201 • 818-247-6000 • www.glenair.com • U.S. CAGE code 06324 •
SuperNine MIL-DTL-38999 Series I Type · Dimensions in Inches (millimeters) are subject to change without notice.

MIL-DTL-38999 Series I Type
231-225-07 High-speed jam-nut mount dual flange receptacle

COAX CONTACTS

COAX CONTACTS

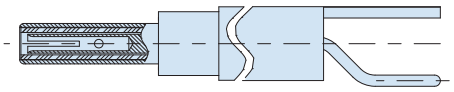

Size #16 Coax Contact, Pin, PC Tail Detail
Interface per M39029/76
Note: Max usable frequency of 700 Mhz

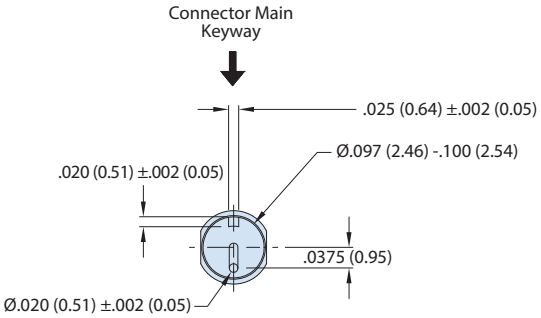

Contact rear view
and interface requirements

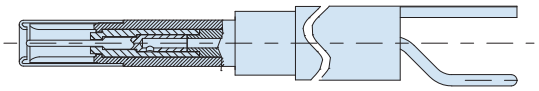

Size #16 Coax Contact, Socket, PC Tail Detail
Interface per M39029/77
Note: Max usable frequency of 700 Mhz

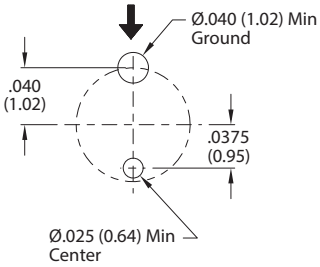

Recommended PCB Footprint

MIL-DTL-38999 Series I Type
231-225-07 High-speed jam-nut mount dual flange receptacle

COAX CONTACTS

COAX CONTACTS

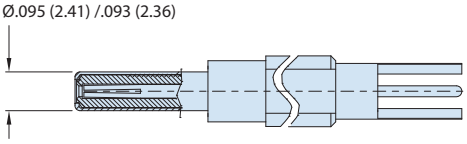

Size #12 Coax Contact Pin, PC Tail Detail
Interface per M39029/102

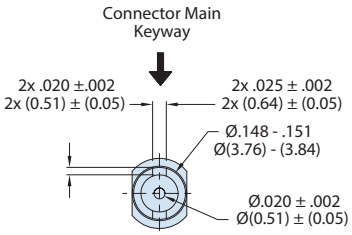

50 Ohm contact rear view
and interface requirements

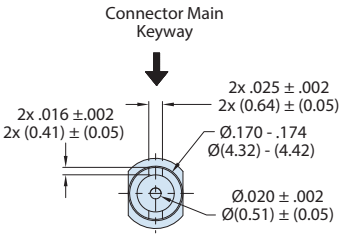

75 Ohm contact rear view
and interface requirements

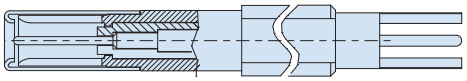

Size #12 Coax Contact Socket, PC Tail Detail
Interface per M39029/103

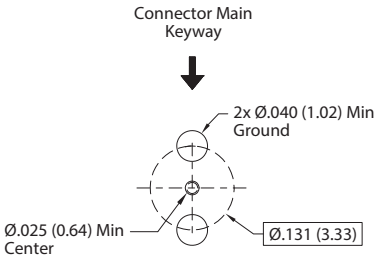

50 Ohm Contact
Recommended PCB Footprint

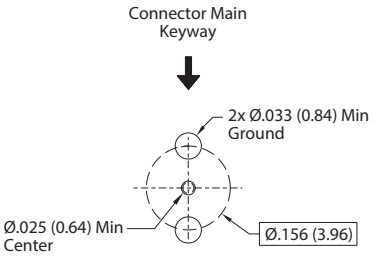

75 Ohm Contact
Recommended PCB Footprint

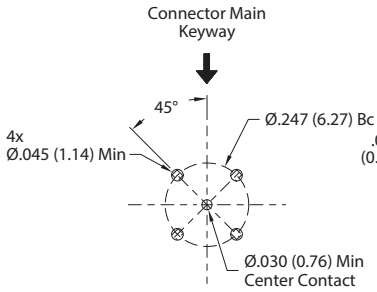

Recommended
Co-ax PCB Layout

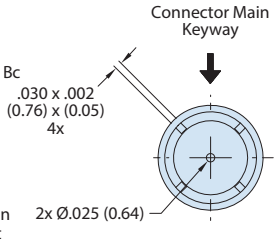

Rear View

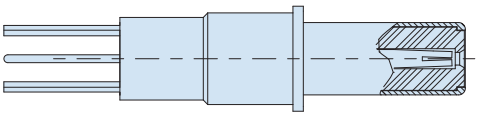

SIZE #8 CO-AX PIN, PC TAIL DETAIL
C = Interface Per M39029/60 (50 Ohm)
C1 = Interface Per 852-056 (75 Ohm)

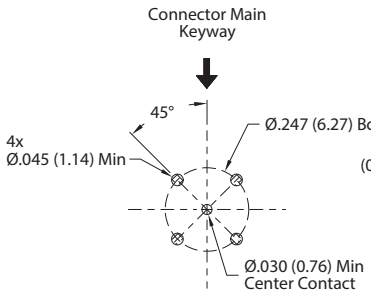

Recommended
Co-ax PCB Layout

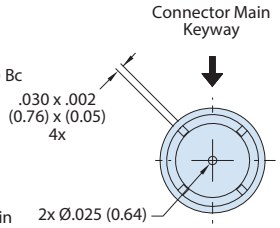

Rear View

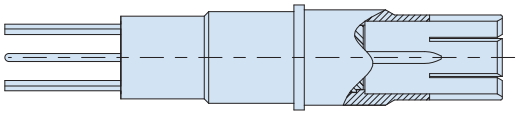

SIZE #8 CO-AX SOCKET, PC TAIL DETAIL
C = Interface Per M39029/59 (50 Ohm)
C1 = Interface Per 852-057 (75 Ohm)

© 2025 Glenair, Inc • 1211 Air Way, Glendale, CA 91201 • 818-247-6000 • www.glenair.com • U.S. CAGE code 06324 •
SuperNine MIL-DTL-38999 Series I Type · Dimensions in Inches (millimeters) are subject to change without notice.

MIL-DTL-38999 Series I Type
231-225-07 High-speed jam-nut mount dual flange receptacle

TWINAX CONTACTS

DIFFERENTIAL TWINAX CONTACT DETAILS

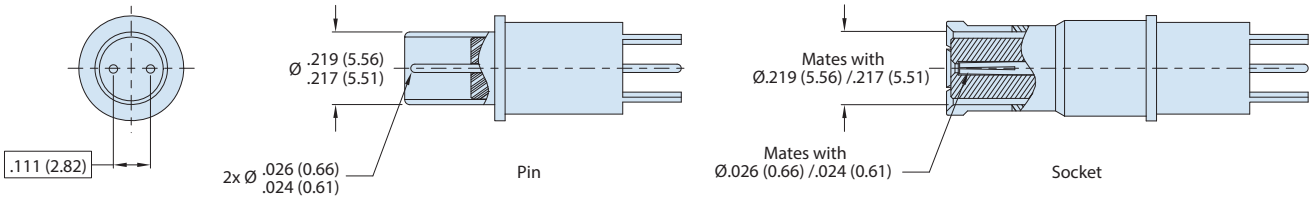

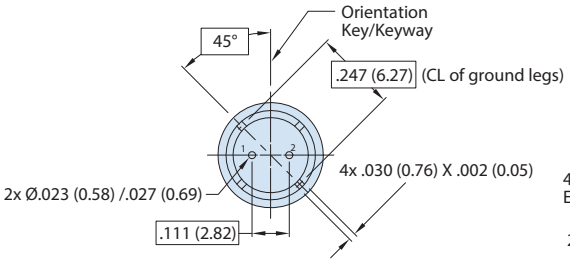

Rear view of differential twinax pin contact (rear) shown. Pin no's are for ref only and shall not be marked.

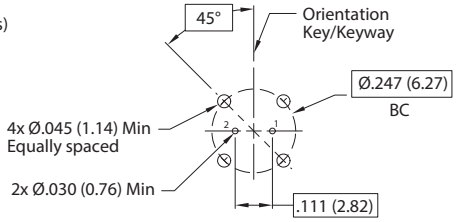

Recommended PC Board Layout
(Pin ID Shown)

MIL-DTL-38999 Series I Type
231-225-07 High-speed jam-nut mount dual flange receptacle

EL OCHITO CONTACTS

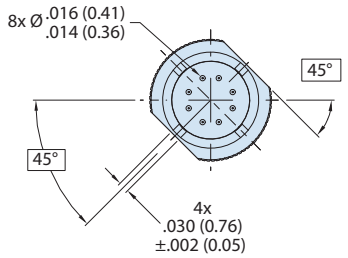

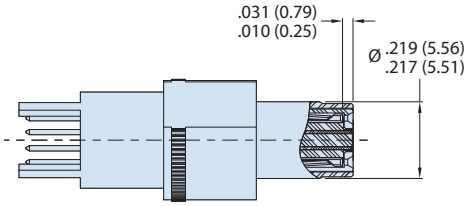

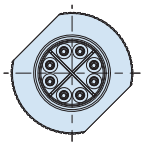

Size #8 El Ochito Pin, PC Tail Detail
White Insert - For Ethernet Applications

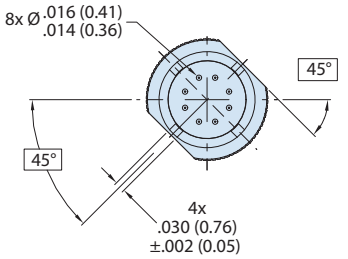

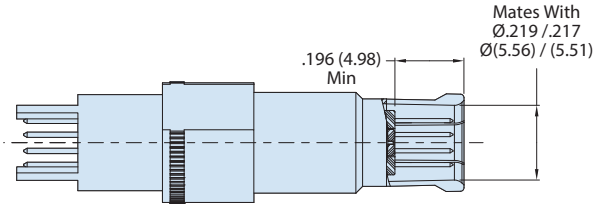

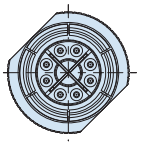

Size #8 El Ochito Socket, PC Tail Detail
White Insert - For Ethernet Applications

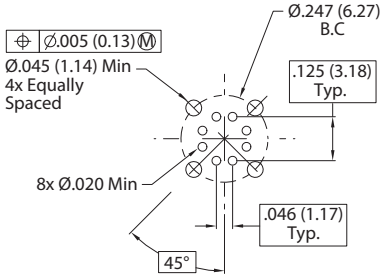

Recommended PC Board Layout
(See Detail A for pin assignment)
For optimal performance, see
Glenair application note AN0002

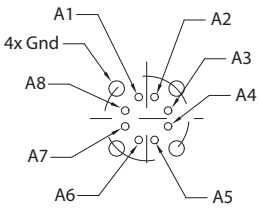

PC Tail Pin Assignment
(For Ochito Pin Contact)

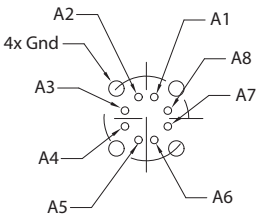

PC Tail Pin Assignment
(For Ochito Skt Contact)

DETAIL A (TYP)

© 2025 Glenair, Inc • 1211 Air Way, Glendale, CA 91201 • 818-247-6000 • www.glenair.com • U.S. CAGE code 06324 •
SuperNine MIL-DTL-38999 Series I Type · Dimensions in Inches (millimeters) are subject to change without notice.

MIL-DTL-38999 Series I Type
231-225-07 High-speed jam-nut mount dual flange receptacle

QUADRAX CONTACTS

QUADRAX CONTACT DETAILS

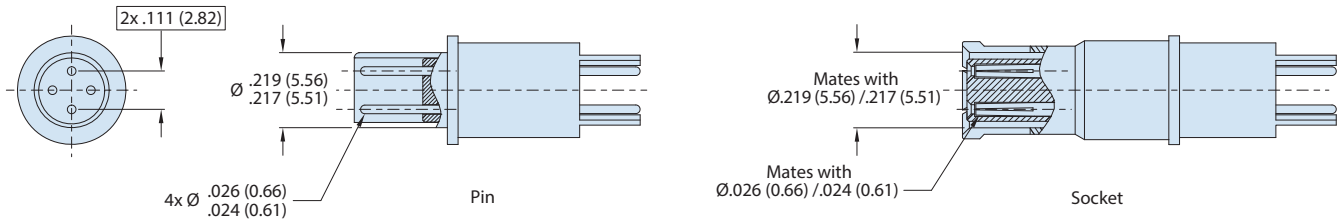

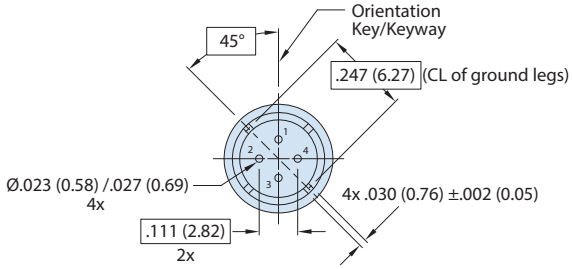

Rear view of differential quadrax pin contact (rear) shown. Pin no's are for ref only and shall not be marked. (Ref: differential pairs: 1 & 3; 2 & 4)

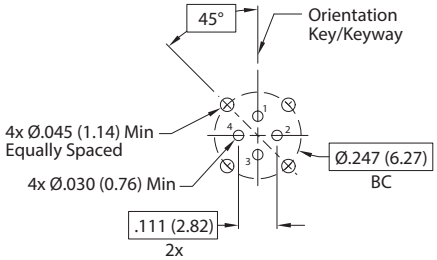

Recommended PC Board Layout (Pin ID shown)

MIL-DTL-38999 Series I Type
231-225-07 High-speed jam-nut mount dual flange receptacle

TRIAX / CONCENTRIC TWINAX CONTACTS

TRIAX / CONCENTRIC TWINAX PIN

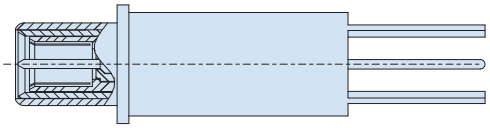

Size #8 Concentric Twinax Pin, Pc Tail Detail
Interface per M39029/90 and/113

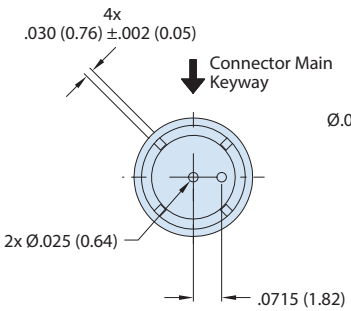

Rear View

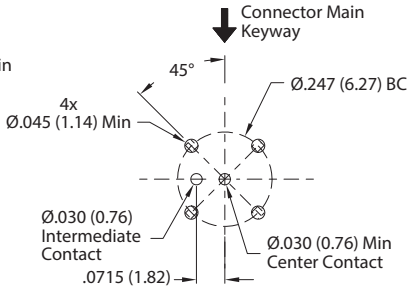

Recommended
Twinax PCB Layout

TRIAX / CONCENTRIC TWINAX SOCKET

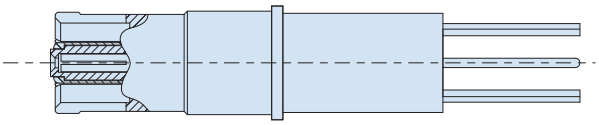

Size #8 Concentric Twinax Socket, PC Tail Detail
Interface per M39029/91 and/114

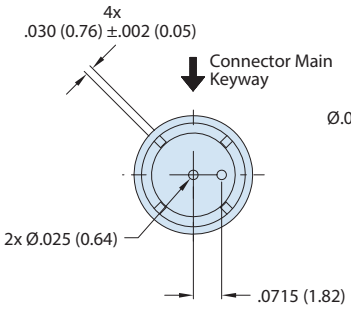

Rear View

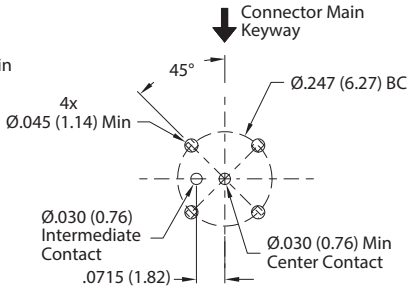

Recommended
Twinax PCB Layout

© 2025 Glenair, Inc • 1211 Air Way, Glendale, CA 91201 • 818-247-6000 • www.glenair.com • U.S. CAGE code 06324 •
SuperNine MIL-DTL-38999 Series I Type · Dimensions in Inches (millimeters) are subject to change without notice.

MIL-DTL-38999 Series I Type
Quick selection guide

QUICK SELECTION GUIDE		
Part number	**Description**	**Page**
	MIL-DTL-38999 Hermetic class insert arrangements	C-2
	MIL-DTL-38999 Hermetic class layouts and pin counts	C-4
	MIL-DTL-38999 Hermetic class material specifications and finishes	C-5
	MIL-DTL-38999 Connector performance specifications	C-6
	MIL-DTL-38999 Contact performance specifications	C-9
	MIL-DTL-38999 Alternate keyway positions	C-10
	Recommended torque values	C-11
	MIL-DTL-38999 Hermetic connectors and environmental mates	C-12
MS27469 / 231-100-H0	Wall-mount hermetic receptacle	C-13
MS27471 / 231-100-H5	Solder-mount hermetic receptacle	C-15
MS27470 / 231-100-H7	Jam-nut mount hermetic receptacle	C-17
231-100-H0	Wall-mount hermetic receptacle	C-19
231-100-H5	Solder-mount hermetic receptacle	C-21
231-100-H7	Jam-nut mount hermetic receptacle	C-22
231-106	Connector with crimp-removable socket contacts	C-24
231-250	Code red lightweight hermetic receptacle	C-28

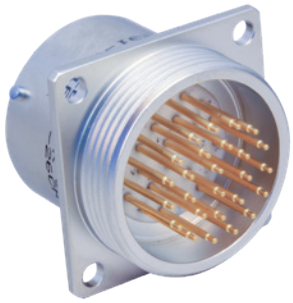

MS27469 / 231-100-H0

MS27471 / 231-100-H5

MS27470 / 231-100-H7

231-100-H0

231-100-H5

231-250

© 2025 Glenair, Inc • 1211 Air Way, Glendale, CA 91201 • 818-247-6000 • www.glenair.com • U.S. CAGE code 06324 •

MIL-DTL-38999 Series I Type
Insert arrangements (IAW MIL-STD-1560) - pin face view

HERMETIC CONNECTORS

Series I	9-35	9-98

Series I	11-2	11-4	11-5	11-35	11-98	11-99

Series I	13-4	13-8	13-35	13-98

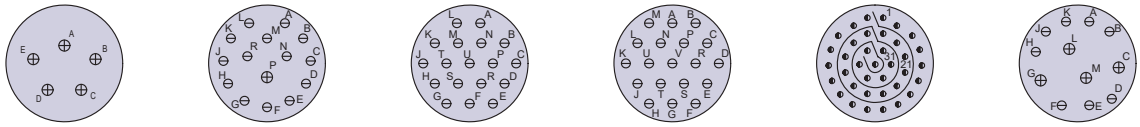

Series I	15-5	15-15	15-18	15-19	15-35	15-97

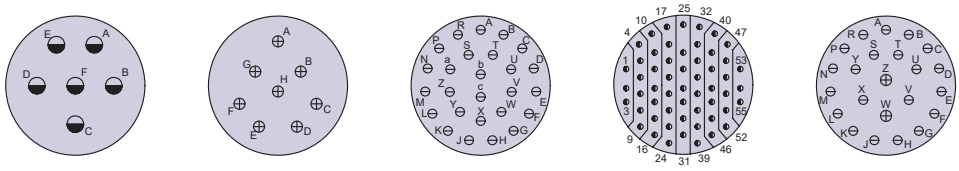

Series I	17-6	17-8	17-26	17-35	17-99

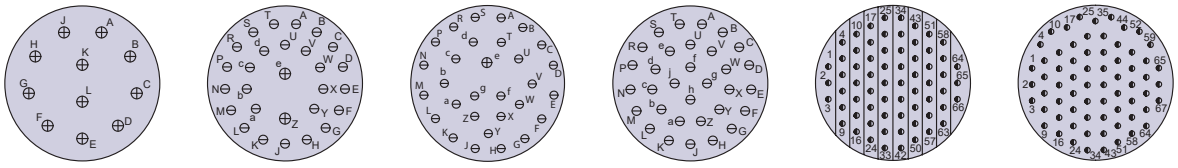

Series I	19-11	19-28	19-30	19-32	19-35	19-45

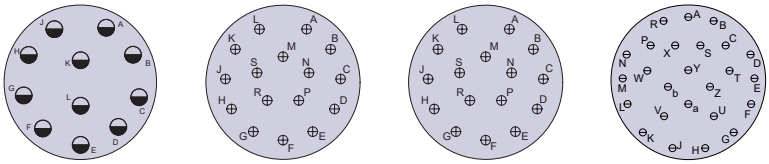

Series I	21-11	21-16	21-24	21-25

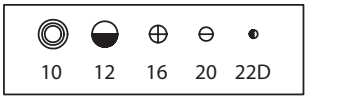

© 2025 Glenair, Inc • 1211 Air Way, Glendale, CA 91201 • 818-247-6000 • www.glenair.com • U.S. CAGE code 06324 •
SuperNine MIL-DTL-38999 Series I Type · Dimensions in Inches (millimeters) are subject to change without notice.

MIL-DTL-38999 Series I Type
Insert arrangements (IAW MIL-STD-1560) - pin face view

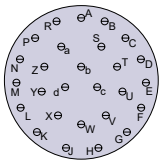
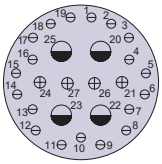
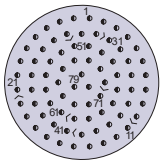
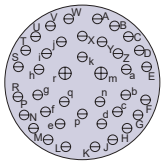
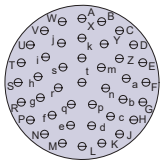

Series I	21-27	21-29	21-35	21-39	21-41

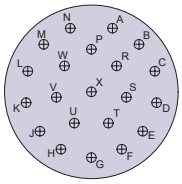
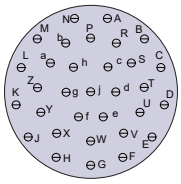
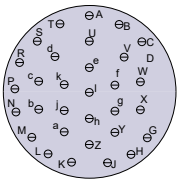
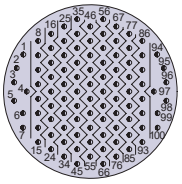

Series I	23-21	23-32	23-34	23-35

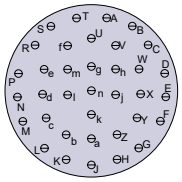
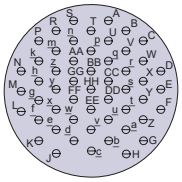
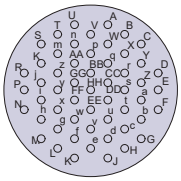
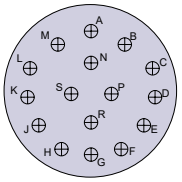
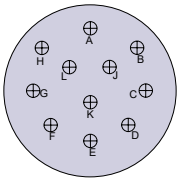

Series I	23-36	23-53	23-55	23-97	23-99

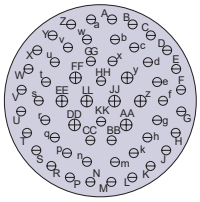
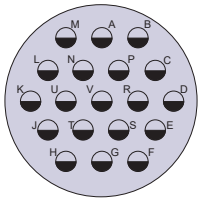
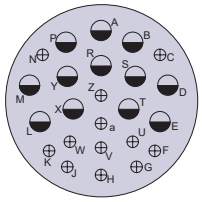
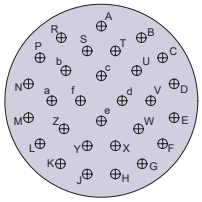

Series I	25-4	25-19	25-24	25-29

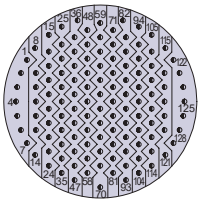
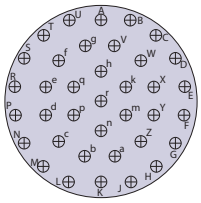
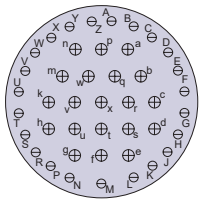
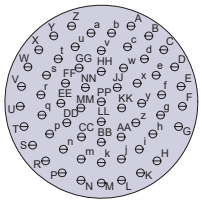
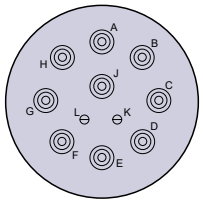

Series I	25-35	25-37	25-43	25-61	--

MIL-DTL-38999 Series I Type
Layouts and pin contact counts - per MIL-STD-1560

INSERT ARRANGEMENTS						
Shell Size - Insert Arrangement	Service Rating	Number of Pins				
Sr I		22D	20	16	12	10
9-35	M	6				
9-98	I		3			
11-2	I			2		
11-4	I		4			
11-5	I		5			
11-35	M	13				
11-98	I		6			
11-99	I		7			
13-4	I			4		
13-8	I		8			
13-35	M	22				
13-98	I		10			
15-5	II			5		
15-15	I		14	1		
15-18	I		18			
15-19	I		19			
15-35	M	37				
15-97	I		8	4		
17-6	I				6	
17-8	II			8		
17-26	I		26			
17-35	M	55				
17-99	I		21	2		
19-11	II			11		
19-28	I		26	2		
19-30	I		29	1		
19-32	I		32			
19-35	M	66				

INSERT ARRANGEMENTS						
Shell Size - Insert Arrangement	Service Rating	Number of Pins				
Sr I		22D	20	16	12	10
19-45	M	67				
21-11	I				11	
21-16	II			16		
21-24	I		24			
21-25	I		25			
21-27	I		27			
21-29	I		19	4	4	
21-35	M	79				
21-39	I		37	2		
21-41	I		41			
23-21	II			21		
23-32	I		32			
23-34	I		34			
23-35	M	100				
23-36	I		36			
23-53	I		53			
23-55	I		55			
23-97	I			16		
23-99	II			11		
25-4	I		48	8		
25-19	I				19	
25-24	I			12	12	
25-29	I			29		
25-35	M	128				
25-37	II			37		
25-43	I		23	20		
25-61	I		61			
--	N		2			10

DWV VOLTSSE LEVELS	
Service Rating	Test Voltag
M	1300 VAC
I	1800 VAC
II	2300 VAC
N	1000 VAC

© 2025 Glenair, Inc • 1211 Air Way, Glendale, CA 91201 • 818-247-6000 • www.glenair.com • U.S. CAGE code 06324 •
SuperNine MIL-DTL-38999 Series I Type · Dimensions in Inches (millimeters) are subject to change without notice.

MIL-DTL-38999 Series I Type
Hermetic class materials and finishes

TABLE I: HERMETIC CLASS MATERIALS	
Shell, Barrel Coupling and Jam-nut (Hermetic)	Stainless steel per AMS-QQ-S-763
Shell, Barrel, Coupling Nut and Jam-nut (Hermetic)	Carbon steel per ASTM-A108, Tin plated per ASTM-B545
Front and Rear Insulators	Glass-filled liquid crystal polymer (LCP) in accordance with MIL-M-24519, Type GLP-30F
Grommet, Peripheral Seal and Interfacial Seal	Blended elastomer, 30% silicone per ZZ-R-765, 70% fluorosilicone per MIL-R-25988
Hermetic Insert	Vitreous glass
Pin Contact (Hermetic)	Nickel-iron alloy per ASTM F30 (Alloy 52),50 microinches gold plated per ASTM B488 Type 3 Code C Class 1,27 over nickel plate per QQ-N-290 Class 2, 50-100 microinches
Socket Contact (Hermetic)	Copper Alloy, Gold Plated IAW ASTM B488, Type 3, Code C
Adhesives	Silicone and epoxy
Potting Compound, PCB and Solder Cup Versions	Environmental and Hermetic Connectors: High-strength epoxy, Hysol EE4215. Filter Connectors: Stycast 2850FT/Catalyst 11 thermally conductive epoxy encapsulant.

TABLE II: HERMETIC CLASS FINISHES			
Plating Code	**Material**	**Finish**	**Specification**
Glenair Commercial Equivalent Plating Codes			
Z1	Stainless Steel	Passivate	AMS-QQ-P-35
FT	Carbon Steel	Fused Tin Plate	ASTM-B545 or ASTM-B339
ZL	Stainless Steel	Electrodeposited Nickel	SAE-AMS-QQ-N-290, Class 2
MIL-DTL-38999 Plating Codes			
D	Carbon Steel	Fused Tin Plate	ASTM-B545 or ASTM-B339
Y	Stainless Steel	Passivate	AMS-QQ-P-35
N	Stainless Steel	Electrodeposited Nickel	SAE-AMS-QQ-N-290, Class 2

*Additional materials are available, including titanium and Inconel®. Consult factory for ordering information.

MIL-DTL-38999 Series I Type
Connector performance specifications

REQUIREMENT	PERFORMANCE SPECIFICATIONS

Insert Arrangements

(Meets MIL-DTL-38999, paragraph 3.4.1.4)
For hermetic connectors, the engaging end of pin and socket contacts shall be located within .004 inch (0.10 mm) diameter of true position. Test voltages for service ratings shall be as specified in table below

TEST VOLTAGES, AC RMS, 60 HZ (UNMATED)

	Service Rating M		Service Rating N		Service Rating I		Service Rating II	
Altitude	Mated	Unmated	Mated	Unmated	Mated	Unmated	Mated	Unmated
Sea level	1300	1300	1000	1000	1800	1800	2300	2300
50,000 feet	800	550	600	400	1000	600	1000	800
70,000 feet	800	350	600	260	1000	400	1000	500
100,000 feet	800	200	600	200	1000	200	1000	200

Supported Wire Size

(Per MIL-DTL-38999, paragraph 3.4.3.1)

Contact Size	23-22	22D	20	16	12	10
Wire Gauge	26, 24, 22	28, 26, 24, 22	24, 22, 20	20, 18, 16	14, 12	10

Thermal Shock

(Meets MIL-DTL-38999, paragraph 3.7)
After cycling the connector between two water baths of approximately 1 cubic foot, not to exceed +4°C for the first and no less than +90°C for the second, it will meet all applicable electrical and mechanical requirements.

Air Leakage

(Meets MIL-DTL-38999, paragraph 3.10)
There shall be no evidence of leakage in excess of .01 micron ft^3/h (1E-7 cm^3/s)

Coupling and Uncoupling Torque

(Meets MIL-DTL-38999, paragraph 3.11)
Coupling torque for mating and the uncoupling torque for unmating of counterpart plugs and receptacles, mating of connectors to and from protective covers, and mating plugs to and from dummy stowage receptacles, shall meet the requirements in Coupling and Uncoupling Torque table.

COUPLING AND UNCOUPLING TORQUE

Shell size	Maximum engagement and disengagement inch/pound	Minimum Disengagement inch/pount	Shell size	Maximum engagement and disengagement inch/pound	Minimum Disengagement inch/pount
8	8	2	17	24	3
9	8	2	18	28	5
10	12	2	19	28	3
11	12	2	20	32	6
12	16	2	21	32	5
13	16	2	22	36	7
14	20	4	23	36	5
15	20	3	24	36	7
16	24	4	25	40	5

Durability

(Meets MIL-DTL-38999, paragraph 3.12)
Not applicable to lanyard release plugs. No electrical or mechanical defects after 500 cycles of engagement and disengagement.

Insulation Resistance

(Meets MIL-DTL-38999, paragraph 3.14.1)
At Ambient Temperature insulation resistance between any pair of contacts and between any contact and the shell shall be greater than 5,000 megohms. Insulation resistance after altitude immersion shall be 1,000 megohms minimum. Insulation resistance after humidity shall be 100 megohms minimum. IAW EIA-364-21.

(Meets MIL-DTL-38999, paragraph 3.14.2)
At Elevated Temperature, unmated connectors shall be tested in accordance with test procedure EIA/ECA-364-21

© 2025 Glenair, Inc • 1211 Air Way, Glendale, CA 91201 • 818-247-6000 • www.glenair.com • U.S. CAGE code 06324 •
SuperNine MIL-DTL-38999 Series I Type · Dimensions in Inches (millimeters) are subject to change without notice.

MIL-DTL-38999 Series I Type
Connector performance specifications

REQUIREMENT	PERFORMANCE SPECIFICATIONS
Dielectric Withstanding Voltage	***(Meets MIL-DTL-38999, paragraph 3.15)*** Wired, unmated connector, maximum leakage current shall be 2 milliamperes, and there shall be no evidence of electric breakdown or flashover. IAW EIA-364-20 method A. Magnitude of the test voltage shall be as specified per insert arrangement requirement, Test Voltages Table (See MIL-STD-1560 for service rating of insert arrangement).
Insert Retention	***(Meets MIL-DTL-38999, paragraph 3.16)*** When tested IAW EIA-364-35, unmated connectors shall retain their inserts in their proper location in the shell and there shall be no evidence of cracking, breaking, separation from the shell, or loosening of parts when subjected to 100 PSI (25 PSI minimum) force.
Salt Spray (Corrosion)	***(Meets MIL-DTL-38999, paragraph 3.17)*** When tested in accordance with EIA-364-26, meets appropriate electrical and mechanical requirements and shows no exposure of base metal after 500 hours of salt spray.
Contact Resistance at 25° C	***(Meets MIL-DTL-38999, paragraph 3.18) Hermetic connectors with sockets only*** Contacts in the mated condition shall meet the contact resistance requirements of the table shown below. Appropriate compensation may be made for resistance in the measured value which is due to an additional length of wire included in the measurement.

Class	Contact Size	Wire Size	Test Amperes	Millivolt Drop Maximum	
				Initial	After Conditioning
H, N and Y	12	12	17	85	100
	16	16	10	85	100
	20	20	5	60	75
	22D	22	3	85	95
	23-22	22	3	85	95

Bayonet Coupling Pin Strength	***(Meets MIL-DTL-38999, paragraph 3.21)*** Applicable to series I and II only. Bayonet coupling pins shall withstand a load of 50 +5/-0 pounds without displacement or perceptible loosening of coupling pins.
Environmental Contact Retention Connectors	***(Meets MIL-DTL-38999, paragraph 3.24)*** The axial displacement of the contact shall not exceed .012 inch (0.30 mm). No damage to contacts or inserts shall result.
Vibration	***(Meets MIL-DTL-38999, paragraph 3.27)*** There shall be no electrical discontinuity and there shall be no disengagement of mated connectors, backing off of the coupling mechanism, evidence of cracking, breaking, or loosening of parts.
Shock	***(Meets MIL-DTL-38999, paragraph 3.28)*** There shall be no electrical discontinuity and there shall be no disengagement of mated connectors, evidence of cracking, breaking, or loosening of parts. Standard shock (all series). Connectors shall be tested in accordance with test procedure EIA-364-27 and any additional details noted. High-impact shock. Applicable to series I, III and IV only. Wired and mated connectors shall be tested in accordance with MIL-S-901, grade A and in accordance with any modifications or additions noted. The wire bundle shall be provided with a straight, environmental, backshell, category 2B in accordance with SAE-AS85049, the longest length available per shell size. Discontinuity monitoring shall be performed in accordance with EIA-364-46.

MIL-DTL-38999 Series I Type
Connector performance specifications

REQUIREMENT	PERFORMANCE SPECIFICATIONS
EMI Shielding	***(Meets MIL-DTL-38999, paragraph 3.32)*** **EMI shielding, low frequencies**. Applicable frequency range is 100 to 1,000 MHz only. **EMI shielding, high frequencies**. Applicable frequency range is 1,000 to 10,000 MHz only. The EMI shielding effectiveness of mated connectors with EMI backshells shall be measured using the mode-stirred technique in accordance with test procedure EIA-364-66. EMI shielding capabilities of mated shells with spring fingers shall not be less than that specified in table at the specified frequencies below.
Fluid Immersion	(Meets MIL-DTL-38999, paragraph 3.34) Designed to function in all fluids encountered in any modern military or aerospace environment. Tested in accordance with test procedure EIA-364-10. Connectors shall be tested for coupling torque and dielectric withstanding voltage at sea level within 3 hours of fluid immersion cycles.
Contact engagement and separating force	(Meets MIL-DTL-38999, paragraph 3.42) Applicable to hermetic connectors with sockets only When tested as specified in 4.5.38, contact engagement and separating forces shall be within the limits specified in SAE-AS39029.
Resistance to Probe Damage	(Meets MIL-DTL-38999, paragraph 3.43) Applicable to hermetic connectors with sockets only Contacts shall withstand the bending moment and depth of test probe insertion without evidence of damage that would interfere with the mechanical or electrical performance.
Fungus	(Meets MIL-DTL-38999, paragraph 4.2.2) Materials used in the construction of these connectors shall be fungus inert per certification of method 508.4 of MIL-STD-810.

Frequency MHz	Leakage Attenuation (dB) Minimum			
	Series I	Series II	Series III & IV (Class N)	Series III & IV (Class H & Y)
100	90	65	90	80
200	88	60	88	75
300	88	55	88	73
400	87	55	87	71
800	85	45	85	66
1,000	85	45	85	65
1,500	69	—	76	59
2,000	65	—	70	55
3,000	61	—	69	52
4,000	58	—	68	50
6,000	55	—	66	48
10,000	50	—	65	45

© 2025 Glenair, Inc • 1211 Air Way, Glendale, CA 91201 • 818-247-6000 • www.glenair.com • U.S. CAGE code 06324 •
SuperNine MIL-DTL-38999 Series I Type · Dimensions in Inches (millimeters) are subject to change without notice.

MIL-DTL-38999 Series I Type
Contact materials and performance specifications

MIL-DTL-38999 CONTACT MATERIALS

Component	Material	Notes
Pin Contact	Beryllium copper alloy per ASTM B197, 50 microinches gold plated per ASTM B488 Type 3 Code C Class 1,27 over nickel plate per QQ-N-290 Class 2, 50-100 microinches.	Approved for Space Flight
Pin Contact, Hermetic	Nickel-iron alloy per ASTM F30 (Alloy 52), 50 microinches gold plated per ASTM B488 Type 3 Code C Class 1,27 over nickel plate per QQ-N-290 Class 2, 50-100 microinches.	Ferromagnetic material.
Socket Contact	Beryllium copper alloy per ASTM B197, 50 microinches gold plated per ASTM B488 Type 3 Code C Class 1,27 over nickel plate per QQ-N-290 Class 2, 50-100 microinches.	Approved for Space Flight
Socket Contact Hood	Stainless steel, passivated per AMS-QQ-P-35.	Approved for Space Flight

CONTACT PERFORMANCE SPECIFICATIONS

REQUIREMENT		
Current Rating	(Per SAE-AS39029, Paragraph 3.5.4)	
Contact Resistance, Type A	(Per SAE-AS39029, Paragraph 3.5.4.1) The contact voltage drop of each mated copper alloy contact pair shall not exceed the applicable values specified.	
Contact Resistance, Type B	(Per SAE-AS39029, Paragraph 3.5.4.2) The contact voltage drop of each ferrous alloy contact with its applicable mating copper alloy contact shall not exceed the applicable values specified.	

Contact Size	Maximum Amps	
	Crimp	Hermetic
23-22	5	3
22D	5	3
20	7.5	5
16	13	10
12	23	17
10	33	24

Wire Size	Test Current Amperes	Maximum Voltage Drop (Millivolts) at 25°C ±3°C
10	33	33
12	23	42
16	13	49
20	7.5	55
22	22	73

Wire Size	Test Current Amperes	Maximum Voltage Drop (Millivolts) at 25°C ±3°C
10	23	363
12	17	462
16	10	539
20	55	605
22	3	803

MIL-DTL-38999 Series I Type
MIL-DTL-38999 Series I and II alternate keyway positions

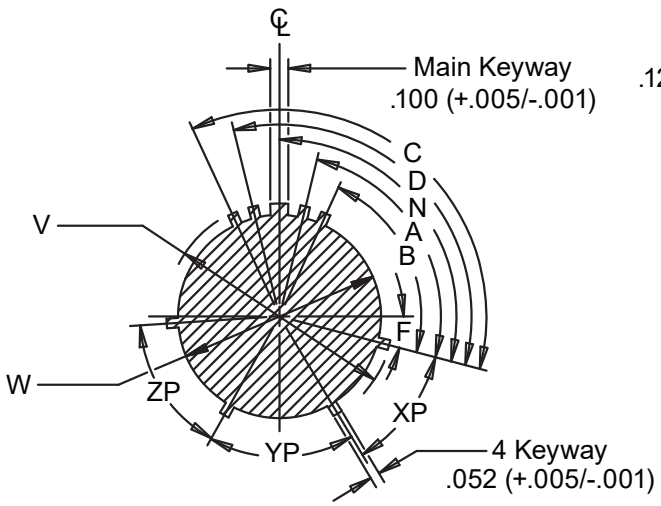

Plugs

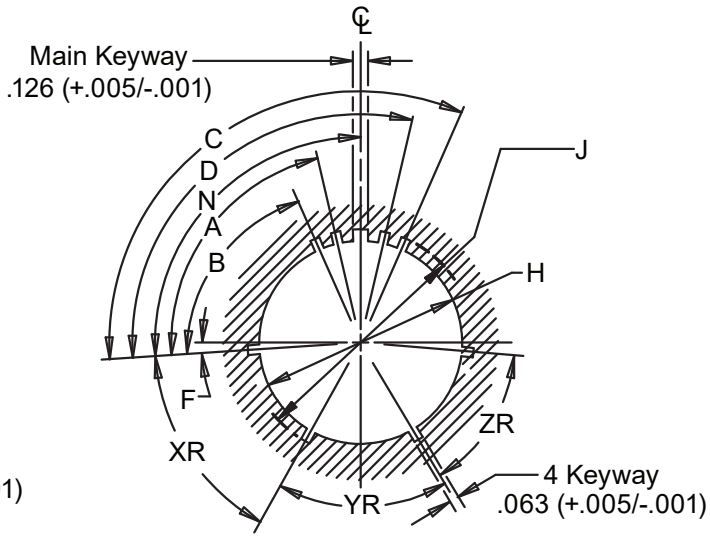

Receptacles

SERIES I ALTERNATE KEY POLARIZATION									
		Normal Rotation				Letter Designation			
Shell Size	F	N	XR XP	YR YP	ZR ZP	A	B	C	D
9	5°	95°	45°	88°	27°	77°	---	---	113°
11	5°	95°	45°	88°	27°	81°	67°	123°	109°
13	5°	95°	45°	88°	27°	75°	63°	127°	115°
15	5°	95°	45°	88°	27°	74°	61°	129°	116°
17	5°	95°	45°	88°	27°	77°	65°	125°	113°
19	5°	95°	45°	88°	27°	77°	65°	125°	113°
21	5°	95°	45°	88°	27°	77°	65°	125°	113°
23	5°	95°	45°	88°	27°	80°	69°	121°	110°
25	5°	95°	45°	88°	27°	80°	69°	121°	110°

SERIES II ALTERNATE KEY POLARIZATION									
		Normal Rotation				Letter Designation			
Shell Size	F	N	XR XP	YR YP	ZR ZP	A	B	C	D
8	10°	100°	28°	100°	37°	82°	---	---	118°
10	10°	100°	28°	100°	37°	86°	72°	128°	114°
12	10°	100°	28°	100°	37°	80°	68°	132°	120°
14	10°	100°	28°	100°	37°	79°	66°	134°	121°
16	10°	100°	28°	100°	37°	82°	70°	130°	118°
18	10°	100°	28°	100°	37°	82°	70°	130°	118°
20	10°	100°	28°	100°	37°	82°	70°	130°	118°
22	10°	100°	28°	100°	37°	85°	74°	126°	115°
24	10°	100°	28°	100°	37°	85°	74°	126°	115°

© 2025 Glenair, Inc • 1211 Air Way, Glendale, CA 91201 • 818-247-6000 • www.glenair.com • U.S. CAGE code 06324 •
SuperNine MIL-DTL-38999 Series I Type · Dimensions in Inches (millimeters) are subject to change without notice.

MIL-DTL-38999 Series I Type
Recommended torque values

INSTALLATION TORQUE VALUES FOR CIRCULAR ELECTRICAL CONNECTOR ACCESSORIES			
Shell Sizes	Column 1 In-Lbs, Min/Max	Column 2 In-Lbs, Min/Max	Column 3 In-Lbs, Min/Max
8, 9, A	30/40	51/61	20/25
3, 10, 10SL, 11, B	30/40	71/81	20/30
7, 12, 12S, 13, C	35/45	103/113	25/35
14, 14S, 15, D	35/45	111/121	25/35
16, 16S, 17, E	35/45	111/121	30/40
18, 19, 27, F	35/45	111/121	30/40
20, 21, 37, G	75/85	131/141	35/45
22, 23, H	75/85	131/141	35/45
24, 25, 61, J	75/85	131/141	35/45
28, 29	115/125	143/153	115/125
32, 33	115/125	143/153	115/125
36	115/125	142/153	112/125
40	155/165	159/169	N/A
44	155/165	159/169	N/A
48	155/165	159/169	N/A

Column 1: Light and Medium Duty
AS50151 (AS31001 Series)
MIL-DTL-26482 Series I
MIL-DTL-26500, MIL-DTL-27599
MIL-DTL-38999 Series I and II
MIL-C-81511 Series I, II, III and IV
AS81703 Series I

Column 2: Heavy Duty
AS50151 (AS34001 Series)
MIL-DTL-22992, MIL-DTL-28840
MIL-DTL-26482 Series II
MIL-DTL-38999 Series III and IV
MIL-DTL-83723 Series I, II and III
AS81703 Series III

Column 3: Composite Material Coupling Threads
(See Notes 1 and 2)

SERIES I AND II RECOMMENDED JAM-NUT TORQUE VALUES			
UN Thread Sizes -2B	Torque min/max (in/lbs)	Connector Shell Size Reference	
		Sr I	Sr III
.6875-24 UNEF	28/34	9	--
.8125-20 UNEF	34/40	11	--
.875-20 UNEF	40/46	--	8
1.000-20 UNEF	50/55	13	10
1.125-18 UN	70/75	15	12
1.250-18 UN	80/85	17	14
1.375-18 UNEF	80/85	19	16
1.500-18 UN	105/115	21	18
1.625-18 ENEF	105/115	23	20
1.750-18 UNS	110/120	25	22
1.875-16 UN	120/130	--	24

SERIES II AND IV RECOMMENDED JAM-NUT TORQUE VALUES			
Metric Thread Sizes - X1-6H	Torque min/max (in/lbs)	Connector Shell Size Reference	
		Sr III	Sr IV
M17	30/36	9	--
M20	40/46	11	--
M25	50/60	13	11
M28	70/75	15	13
M31	70/75	--	15
M32	80/85	17	--
M34	80/85	--	17
M35	90/95	19	--
M38	100/110	21	19
M41	110/120	23	21
M44	120/130	25	23
M47	120/130	--	25

TORQUE VALUES FOR CABLE CLAMP SCREWS	
Screw Size	In-Lbs Min/Max
2-56	1.5/2.5
4-40	3.5/4.5
6-32	5.0/7.0
8-32	7.0/9.0
10-32	9.0/11.0
.250-20	11.0/13.0

See Note 5 And 6

CABLE CLAMP TORQUE VALUES		
Clamp Size	With Grommet See Note 4	Without Grommet
	In-Lbs Min/Max	In-Lbs Min/Max
3	8/12	30/40
4	10/15	30/40
6	10/15	35/55
8	12/20	35/55
10	12/20	35/55
12	15/30	40/60
16	20/40	40/60
20	20/40	40/60
24	25/45	80/100
28	30/50	80/100
32	30/50	80/100
40	40/60	80/100

NOTES
1) Use Glenair 600-091/157 and 600-007 torque tools when tightening hexagonal composite accessory couplings.
2) Metal and composite torque values per SAE AIR 6151. All values provided in Inch-Pounds.
3) For additional guidance or values/conditions not listed, refer to SAE AIR6151.
4) Values are based on lubricated grommets and clamp threads.
5) For stainless-steel or plated steel screws into aluminum or stainless-steel.
6) Not applicable for light-duty saddles unless bottomed on clamp nut.
recommended torque of 35 in-lb.

EMI/RFI shielding terminated with conical metal ferrule(s) should employ a minimum

MIL-DTL-38999 Series I Type
Hermetic connectors and environmental mates

HERMETIC CONNECTORS

HERMETIC	ENVIRONMENTAL
230-003P09-35PN	D38999/26FA35SN
230-003P09-35PN	D38999/26FA35SN
230-003P15-97DN	D38999/26FD97PN
230-003P19-11DN	D38999/26FF11PN
231-100-H7Z113-35PN	MS27467E13F35S
231-100-H7Z113-35PN	MS27467E13F35S
231-100-H7Z113-35PN	MS27467E13F35S
231-100-H7Z113-35PN	MS27467E13F35S
231-100-H7Z113-35PN	MS27467E13F35S
231-100-H7Z113-35PN	MS27467E13F35S
231-100-H7Z113-35PN	MS27467E13F35S
231-100-H7Z115-35PA	MS27467E15F35SA
231-100-H7Z115-35PA	MS27467E15F35SA
231-100-H7Z115-35PA	MS27467E15F35SA
231-100-H7Z115-35PA	MS27467E15F35SA
231-100-H7Z115-35PA	MS27467E15F35SA
231-100-H7Z115-35PA	MS27467E15F35SA
231-100-H7Z117-35PN	MS27467E17F35S
231-100-H7Z117-35PN	MS27467E17F35S
231-100-H7Z117-35PN	MS27467E17F35S
231-100-H7Z117-35PN	MS27467E17F35S
231-100-H7Z117-35PN	MS27467E17F35S
231-100-H7Z117-35PN	MS27467E17F35S
231-100-H7ZL17-35PN	MS27467E17F35S
232-100-H5Z110-35PN	MS27473E10F35S
233-100-H7ZL17-06DN	D38999/26FE6PN
233-100-H7ZL17-06DN	D38999/26FE6PN
D38999/21NA35PN	D38999/26FA35SN
D38999/21NA35PN	D38999/26FA35SN
D38999/21NB35PN	D38999/26FB35SN
D38999/21ND35PA	D38999/26FD35SA
D38999/21NJ19PN	D38999/26FJ19SN
D38999/21NJ19PN	D38999/26FJ19SN
D38999/21NJ35DA	D38999/26FJ35PA
D38999/21NJ35DA	D38999/26FJ35PA
D38999/21NJ35DB	D38999/26FJ35PB
D38999/21NJ35DB	D38999/26FJ35PB
D38999/21NJ35DC	D38999/26FJ35DC
D38999/21NJ35DC	D38999/26FJ35DC
D38999/21YA98PN	D38999/26FA98SN

HERMETIC	ENVIRONMENTAL
D38999/21YA98PN	D38999/26FA98SN
D38999/21YB35XA	D38999/26FB35SA
D38999/21YB5PN	D38999/26FB5SN
D38999/21YB5PN	D38999/26FB5SN
D38999/21YB98PB	D38999/26FB98SB
D38999/21YB98PC	D38999/26FB98SC
D38999/21YB98PN	D38999/26FB98SN
D38999/21YB99PN	D38999/26FB99SN
D38999/21YC35PN	D38999/26FC35SN
D38999/21YC4PN	D38999/26FC4SN
D38999/21YC4PN	D38999/26FC4SN
D38999/21YC4PN	D38999/26FC4SN
D38999/21YC4SN	D38999/26FC4PN
D38999/21YC4SN	D38999/26FC4PN
D38999/21YC98PA	D38999/26FC98SA
D38999/21YC98PA	D38999/26FC98SA
D38999/21YC98PA	D38999/26FC98SA
D38999/21YD5PN	D38999/26FD5SN
D38999/21YD97PA	D38999/26FD97SA
D38999/21YD97PA	D38999/26FD97SA
D38999/21YD97PN	D38999/26FD97SN
D38999/21YE6XN	D38999/26FE6SN
D38999/21YG16PN	D38999/26FG16SN
D38999/21YG39PN	D38999/26FG39SN
D38999/23NA35PN	D38999/26FA35SN
D38999/23NB5SN	D38999/26FB5PN
D38999/23ND35PA	D38999/26FD35SA
D38999/23ND97DN	D38999/26FD97PN
D38999/23NF11DN	D38999/26FF11PN
D38999/23NG16PN	D38999/26FG16SN
D38999/23NG16PN	D38999/26FG16SN
D38999/23YA35PN	D38999/26FA35SN
D38999/23YA35PN	D38999/26FA35SN
D38999/23YA35PN	D38999/26FA35SN
D38999/23YB35CN	D38999/26FB35SN
D38999/23YB35PA	D38999/26FB35SA
D38999/23YB35PN	D38999/26FB35SN
D38999/23YB35PN	D38999/26FB35SN
D38999/23YB35PN	D38999/26FB35SN
D38999/23YB35SN	D38999/26FB35PN

HERMETIC	ENVIRONMENTAL
D38999/23YB35SN	D38999/26FB35PN
D38999/23YB35SN	D38999/26FB35PN
D38999/23YB98PN	D38999/26FB98SN
D38999/23YC35PC	D38999/26FC35SC
D38999/23YC35PN	D38999/26FC35SN
D38999/23YC35SB	D38999/26FC35PB
D38999/23YC35SB	D38999/26FC35PB
D38999/23YC35SB	D38999/26FC35PB
D38999/23YC35SN	D38999/26FC35PN
D38999/23YC35SN	D38999/26FC35PN
D38999/23YC4PN	D38999/26FC4SN
D38999/23YC98PN	D38999/26FC98SN
D38999/23YC98PN	D38999/26FC98SN
D38999/23YC98PN	D38999/26FC98SN
D38999/23YC98PN	D38999/26FC98SN
D38999/23YE26SA	D38999/26FE26PA
D38999/23YE6SN	D38999/26FE6PN
D38999/23YG41CN	D38999/26FG41SN
D38999/23YH35CN	D38999/26FH35SN
D38999/23YH35PA	D38999/26FH35SA
D38999/23YH35PA	D38999/26FH35SA
D38999/23YJ29SN	D38999/26FJ29PN
D38999/23YJ29SN	D38999/26FJ29PN
D38999/25YH35PN	D38999/26FH35SN
D38999/48YC35PN	D38999/46FC35SN
MS27469Y23N35C	MS27467E23F35S
MS27470Y11D35S	MS27467E11F35P
MS27470Y15E35PA	MS27467E15F35SA
MS27470Y23D21P	MS27467E23F21S
MS27471Y11E35P	MS27467E11F35S
MS27471Y11E35P	MS27467E11F35S
MS27471Y13D98PB	MS27467E13F98SB
MS27475Y10E35P	MS27473E10F35S
MS27477Y14E18PB	MS27473E14F18SB
MS27477Y14N18S	MS27473E14F18P
MS27478Y10E35P	MS27473E10F35S
MS27478Y10N35C	MS27473E10F35S
MS27478Y10N35C	MS27473E10F35S
MS27478Y18N35P	MS27473E18F35S

© 2025 Glenair, Inc • 1211 Air Way, Glendale, CA 91201 • 818-247-6000 • www.glenair.com • U.S. CAGE code 06324 •
SuperNine MIL-DTL-38999 Series I Type · Dimensions in Inches (millimeters) are subject to change without notice.

MIL-DTL-38999 Series I Type
231-100-H0 and MS27469 Wall-mount hermetic receptacle

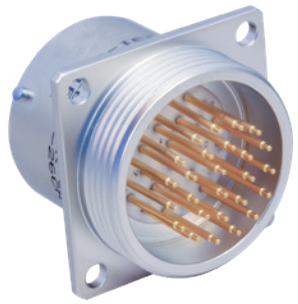

MATERIAL/FINISH:

- Shell, nut: CRES/passivated, carbon steel/fused tin-plated or CRES/nickel plated.
- Contacts: nickel iron alloy 52 / gold plated
- Socket: copper alloy / gold plated
- Insulator: fused vitreous glass
- Socket insulator: high-grade rigid dielectric
- Seals: fluorosilicone rubber

PERFORMANCE SPECIFICATIONS

- Hermeticity: <1 x 10^{-7}

NOTES

1. Glenair 231-100-H0 receptacle connector is designed to mate with any QPL manufacturer's DTL-38999 Series III plug connector having the same shell size, polarization, and arrangement except for shielded contact arrangements. Consult factory for mating plug options
2. Insert arrangements in accordance with MIL-STD-1560. Arrangements which specify shielded contacts will be built with appropriately sized power / signal contacts. Crimp-removable shielded contacts are not available in standard hermetic connectors. Consult factory for special hermetic shielded contact option

HOW TO ORDER

COTS Sample Part No.	231-100	-H0	Z1	11	-35	P	N
Series	231-100						
Shell Type	H0						
Material and Finish	ZL, Z1, FT						
Shell Size	9 thru 25						
Insert Arrangement	Per MIL-STD-1560; see page C-2						
Contact Termination	P, X, C, S, Z, D						
Keyway Position	A, B, C, D; (N for Normal)						

MS Sample Part No.	MS27469	Y	11	N	35	P	A
MS Number and Cl	MS27469						
Class	Y						
Shell Size	9 thru 25						
Material and Finish	D, E, N						
Insert Arrangement	Per MIL-STD-1560; see page C-2						
Contact Termination	P, X, C, S, Z, D						
Keyway Position	A, B, C, D; (Omit for Normal)						

MS PART NUMBER DETAILS

Shell Style and Class

MS27469Y = hermetic, Jam-nut mount receptacle

Shell Size

9, **11**, **13**, **15**, **17**, **19**, **21**, **23**, **25**

Connector Material and Finish

D = carbon steel, fused tin finish, 150° C, conductive

E = stainless steel, passivate finish, 200° C, conductive

N = stainless steel, nickel finish (electrodeposited), 200° C conductive

Insert Arrangement

MIL-DTL-38999 Series I hermetic inserts per MIL-STD-1560; Refer to Insert Arrangements on page B-2

Contact Termination (500-cycle contacts)

P = pin, solder cup
X = pin, eyelet
C = pin, feedthru
S = socket, solder cup
Z = socket, eyelet
D = socket, feedthru

Alternate Key Position

A, **B**, **C**, **D**; (**N** for normal)

COTS PART NUMBER DETAILS

Shell Style and Class

231-100-H0 = hermetic, solder-mount receptacle

Connector Material and Finish

ZL = carbon steel, fused tin finish, 150° C, conductive

Z1 = stainless steel, passivate finish, 200° C, conductive

FT = stainless steel, nickel finish (electrodeposited), 200° C, conductive

Shell Size

9, **11**, **13**, **15**, **17**, **19**, **21**, **23**, **25**

Insert Arrangement

MIL-DTL-38999 Series I hermetic inserts per MIL-STD-1560; Refer to Insert Arrangements on page B-2

Contact Termination (500-cycle contacts)

P = pin, solder cup
X = pin, eyelet
C = pin, feedthru
S = socket, solder cup
Z = socket, eyelet
D = socket, feedthru

Alternate Key Position

A, **B**, **C**, **D**; (**N** for normal)

HERMETIC LEAK RATE MODIFICATION CODES

Designator	Required Leak Rate
-585A	$1x10^{-10}$ atm ccHe/s per sec
-585B	$1x10^{-9}$ ccHe/s per sec
-585C	$1x10^{-8}$ ccHe/s per sec

WIRE ACCOMMODATION

Contact Size	Wire Gauge
22D	#22 - #28
20	#20 - #24
16	#16 - #20
12	#12 - #14

© 2025 Glenair, Inc • 1211 Air Way, Glendale, CA 91201 • 818-247-6000 • www.glenair.com • U.S. CAGE code 06324 •

MIL-DTL-38999 Series I Type
231-100-H0 and MS27469 Wall-mount hermetic receptacle

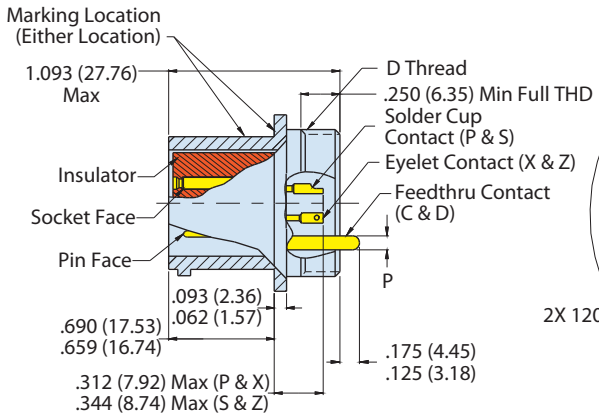

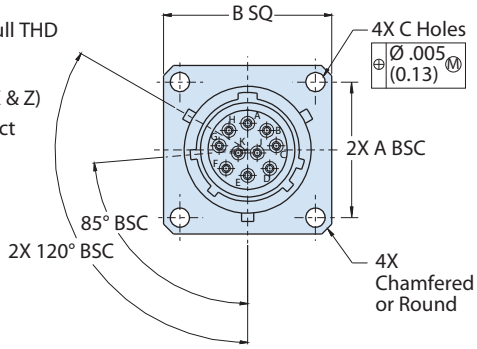

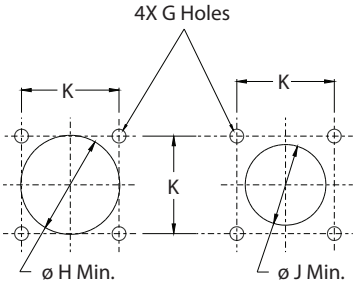

TABLE II: CONTACT SIZE

PCB CONTACT STYLE C AND D

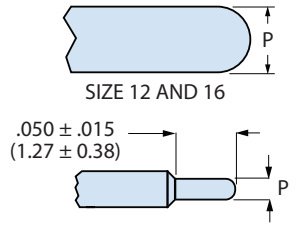

Size	ø P
22D	.011 (0.28) .015 (0.38)
20	.024 (0.61) .028 (0.71)
16	.0635 (1.61) .0615 (1.56)
12	.095 (2.41) .093 (2.36)

CONNECTOR DIMENSIONS

SHELL SIZE	A BSC	B SQ ±.016 (0.4)	ø C HOLES	D THREADS	ø G HOLES ±.005 (0.1)	ø H MIN	ø J MIN	K ±.005 (0.1)
9	.719 (18.3)	.938 (23.8)	.133 (3.4) .123 (3.1)	.6875-24 UNEF-2A	.128 (3.3)	.656 (16.7)	.697 (17.7)	.719 (18.3)
11	.812 (20.6)	1.031 (26.2)	.133 (3.4) .123 (3.1)	.8125-20 UNEF-2A	.128 (3.3)	.796 (20.2)	.822 (20.9)	.812 (20.6)
13	.906 (23.0)	1.125 (28.6)	.133 (3.4) .123 (3.1)	.9375-20 UNEF-2A	.128 (3.3)	.921 (23.4)	.947 (24.1)	.906 (23.0)
15	.969 (24.6)	1.219 (31.0)	.133 (3.4) .123 (3.1)	1.0625-18 UNEF-2A	.128 (3.3)	1.047 (26.6)	1.072 (27.2)	.968 (24.6)
17	1.062 (27.0)	1.312 (33.3)	.133 (3.4) .123 (3.1)	1.1875-18 UNEF-2A	.128 (3.3)	1.218 (30.9)	1.197 (30.4)	1.062 (27.0)
19	1.156 (29.4)	1.438 (36.5)	.133 (3.4) .123 (3.1)	1.3125-18 UNEF-2A	.128 (3.3)	1.296 (32.9)	1.322 (33.6)	1.156 (29.4)
21	1.250 (31.8)	1.562 (39.7)	.133 (3.4) .123 (3.1)	1.4375-18 UNEF-2A	.128 (3.3)	1.421 (36.1)	1.447 (36.8)	1.250 (31.8)
23	1.375 (34.9)	1.688 (42.9)	.157 (4.0) .142 (3.6)	1.5625-18 UNEF-2A	.154 (3.9)	1.546 (39.3)	1.572 (39.9)	1.375 (34.9)
25	1.500 (38.1)	1.812 (46.0)	.157 (4.0) .142 (3.6)	1.6875-18 UNEF-2A	.154 (3.9)	1.672 (42.5)	1.697 (43.1)	1.500 (38.1)

INSERT ARRANGEMENTS

Shell Size - Insert Arrangement	22D	20	16	12
	Number of Pins			
9-98		3		
9-35	6			
11-4		4		
11-5		5		
11-98		6		
11-99		7		
11-35	13	7		
11-2			2	
13-4			4	
13-8		8		
13-98		10		
13-35	22			
15-5			5	
15-15		14	1	
15-18		18		
15-19		19		
15-35	37			
15-97		8	4	
17-6				6
17-8			8	
17-26		26		
17-99		21	2	
17-35	55			
19-11			11	
19-28		26	2	
19-30		29	1	
19-32		32		
19-35	66			
19-45	67			
21-11				11
21-16			16	
21-24		24		
21-25		25		
21-27		27		
21-41		41		
21-29		19	4	4
21-39		37	2	
21-35	79			
23-35	100			
23-21			21	
23-32		32		
23-34		34		
23-36		36		
23-53		53		
23-97			16	
23-99			11	
23-55		55		
25-35	128			
25-29			29	
25-37			37	
25-61		61		
25-4		48	8	
25-43		23	20	
25-19				19
25-24			12	12

© 2025 Glenair, Inc • 1211 Air Way, Glendale, CA 91201 • 818-247-6000 • www.glenair.com • U.S. CAGE code 06324 •
SuperNine MIL-DTL-38999 Series I Type · Dimensions in Inches (millimeters) are subject to change without notice.

MIL-DTL-38999 Series I Type
231-100-H5 and MS27471 Solder-mount hermetic receptacle

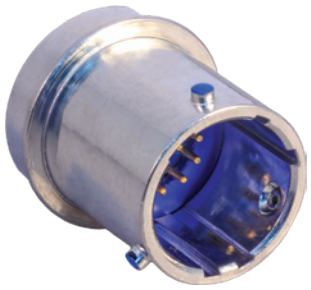

HOW TO ORDER							
COTS Sample Part No.	**231-100**	**-H5**	**Z1**	**11**	**-35**	**P**	**N**
Series	231-100						
Shell Style	H5						
Material and Finish	ZL, Z1, FT						
Shell Size	9 thru 25						
Insert Arrangement	Per MIL-STD-1560; see page C-2						
Contact Style	P, X, C, S, Z, D						
Keyway Position	A, B, C, D; (N for Normal)						

MS Sample Part No.	**MS27471**	**Y**	**11**	**N**	**35**	**P**	**A**
MS Number	MS27471						
Class	Y						
Shell Size	9 thru 25						
Material and Finish	D, E, N						
Insert Arrangement	Per MIL-STD-1560; see page C-2						
Contact Termination	P, X, C, S, Z, D						
Keyway Position	A, B, C, D; (Omit for Normal)						

MATERIAL/FINISH:

- Shell: CRES/passivated, CRES/nickel plated or carbon steel / fused tin plated.
- Contacts: nickel iron alloy 52 / gold plated
- Sockets: copper alloy / gold plated
- Insulator: fused vitreous glass
- Socket insulator: high grade rigid dielectric
- Seals: fluorosilicone rubber

PERFORMANCE SPECIFICATIONS

- Hermeticity: <1 x 10^{-7}

NOTES

- Glenair 231-100-H5 receptacle connector is designed to mate with any QPL manufacturer's DTL-38999 Series III plug connector having the same shell size, polarization, and arrangement except for shielded contact arrangements. Consult factory for mating plug options
- Insert arrangements in accordance with MIL-STD-1560 arrangements which specify shielded contacts will be built with appropriately sized power / signal contacts. Crimp-removable shielded contacts are not available in standard hermetic connectors. Consult factory for special hermetic shielded contact option

MS PART NUMBER DETAILS

Shell Style and Class

MS27471Y = solder-mount receptacle, hermetic

Shell Size

9, **11**, **13**, **15**, **17**, **19**, **21**, **23**, **25**

Connector Material and Finish

D = carbon steel, fused tin finish, 150° C, conductive

E = stainless steel, passivate finish, 200° C, conductive

N = stainless steel, nickel finish (electrodeposited), 200° C conductive

Insert Arrangement

MIL-DTL-38999 Series II hermetic inserts per MIL-STD-1560; Refer to Insert Arrangements on page B-2

Contact Termination (500-cycle contacts)

P = pin, solder cup
X = pin, eyelet
C = pin, feedthru
S = socket, solder cup
Z = socket, eyelet
D = socket, feedthru

Alternate Key Position

A, **B**, **C**, **D**; (**N** for normal)

COTS PART NUMBER DETAILS

Shell Style and Class

231-100-H5 = solder-mount receptacle, hermetic

Connector Material and Finish

ZL = carbon steel, fused tin finish, 150° C, conductive

Z1 = stainless steel, passivate finish, 200° C, conductive

FT = stainless steel, nickel finish (electrodeposited), 200° C, conductive

Shell Size

9, **11**, **13**, **15**, **17**, **19**, **21**, **23**, **25**

Insert Arrangement

MIL-DTL-38999 Series II hermetic inserts per MIL-STD-1560; Refer to Insert Arrangements on page B-2

Contact Termination (500-cycle contacts)

P = pin, solder cup
X = pin, eyelet
C = pin, feedthru
S = socket, solder cup
Z = socket, eyelet
D = socket, feedthru

Alternate Key Position

A, **B**, **C**, **D**; (**N** for normal)

HERMETIC LEAK RATE MODIFICATION CODES

Designator	Required Leak Rate
-585A	1x10^{-10} atm ccHe/s per sec
-585B	1x10^{-9} ccHe/s per sec
-585C	1x10^{-8} ccHe/s per sec

WIRE ACCOMMODATION

Contact Size	Wire Guage
22D	#22 - #28
20	#20 - #24
16	#16 - #20
12	#12 - #14

© 2025 Glenair, Inc • 1211 Air Way, Glendale, CA 91201 • 818-247-6000 • www.glenair.com • U.S. CAGE code 06324 •

MIL-DTL-38999 Series I Type
231-100-H5 and MS27471 Solder-mount hermetic receptacle

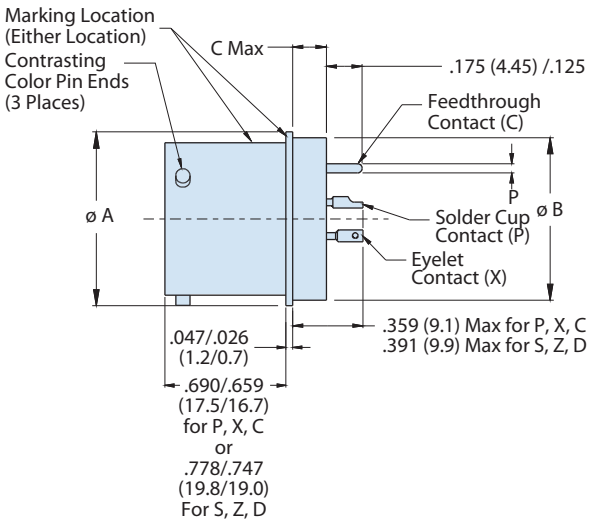

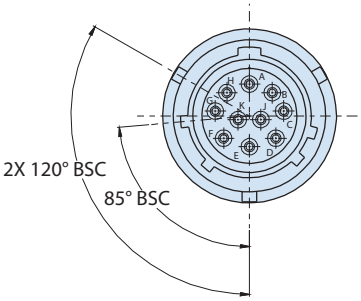

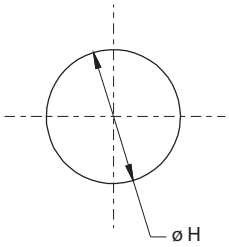

Front Panel Mounting

TABLE II: CONTACT SIZE

PCB CONTACT STYLE C AND D

SIZE 12 AND 16

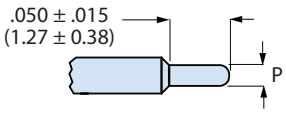

SIZE 22D AND SIZE 20
(#20 INACTIVE FOR NEW DESIGN)

Size	ø P
22D	.011 (0.28) .015 (0.38)
20	.024 (0.61) .028 (0.71)
16	.0635 (1.61) .0615 (1.56)
12	.095 (2.41) .093 (2.36)

CONNECTOR DIMENSIONS

Shell Size	Ø A ±.016 (0.4)	Ø B	C Max	Ø H ±.005 (0.1)
9	.750 (19.1)	.673 (17.1) .667 (16.9)	.187 (4.7)	.680 (17.3)
11	.844 (21.4)	.782 (19.9) .776 (19.7)	.187 (4.7)	.789 20.0)
13	.969 (24.6)	.907 (23.0) .901 (22.9)	.187 (4.7)	.914 (23.2)
15	1.094 (27.8)	1.032 (26.2) 1.027 (26.1)	.187 (4.7)	1.038 (26.4)
17	1.218 (30.9)	1.157 (29.4) 1.151 (29.2)	.187 (4.7)	1.164 (29.6)
19	1.312 (33.3)	1.251 (31.8) 1.245 (31.6)	.187 (4.7)	1.258 (32.0)
21	1.438 (36.5)	1.376 (35.0) 1.370 (34.8)	.187 (4.7)	1.383 (35.1)
23	1.563 (39.7)	1.501 (38.1) 1.495 (38.0)	.218 (5.5)	1.508 (38.3)
25	1.688 (42.9)	1.626 (41.3) 1.620 (41.1)	.218 (5.5)	1.643 (41.7)

INSERT ARRANGEMENTS

Shell Size - Insert Arrangement	22D	20	16	12
	Number of Pins			
9-98		3		
9-35	6			
11-4		4		
11-5		5		
11-98		6		
11-99		7		
11-35	13	7		
11-2			2	
13-4			4	
13-8		8		
13-98		10		
13-35	22			
15-5			5	
15-15		14	1	
15-18		18		
15-19		19		
15-35	37			
15-97		8	4	
17-6				6
17-8			8	
17-26		26		
17-99		21	2	
17-35	55			
19-11			11	
19-28		26	2	
19-30		29	1	
19-32		32		
19-35	66			
19-45	67			
21-11				11
21-16			16	
21-24		24		
21-25		25		
21-27		27		
21-41		41		
21-29		19	4	4
21-39		37	2	
21-35	79			
23-35	100			
23-21			21	
23-32		32		
23-34		34		
23-36		36		
23-53		53		
23-97			16	
23-99			11	
23-55		55		
25-35	128			
25-29			29	
25-37			37	
25-61		61		
25-4		48	8	
25-43		23	20	
25-19				19
25-24			12	12

© 2025 Glenair, Inc • 1211 Air Way, Glendale, CA 91201 • 818-247-6000 • www.glenair.com • U.S. CAGE code 06324 •
SuperNine MIL-DTL-38999 Series I Type · Dimensions in Inches (millimeters) are subject to change without notice.

MIL-DTL-38999 Series I Type
231-100-H7 and MS27470 Jam-nut mount receptacle

MATERIAL/FINISH:

- Shell: CRES/passivated, CRES/nickel plated or carbon steel / fused tin plated.
- Contacts: nickel iron alloy 52 / gold plated
- Sockets: copper alloy / gold plated
- Insulator: fused vitreous glass
- Socket insulator: high grade rigid dielectric
- Seals: fluorosilicone rubber

PERFORMANCE SPECIFICATIONS

- Hermeticity: <1 x 10^{-7}

NOTES

- Glenair 231-100-H7 receptacle connector is designed to mate with any QPL manufacturer's DTL-38999 Series III plug connector having the same shell size, polarization, and arrangement except for shielded contact arrangements. Consult factory for mating plug options
- Insert arrangements in accordance with MIL-STD-1560 arrangements which specify shielded contacts will be built with appropriately sized power / signal contacts. Crimp-removable shielded contacts are not available in standard hermetic connectors. Consult factory for special hermetic shielded contact option

HOW TO ORDER

COTS Sample Part No.	231-100	-H7	Z1	11	-35	P	N
Series	231-100						
Shell Style	H7						
Material and Finish	ZL, Z1, FT						
Shell Size	9 thru 25						
Insert Arrangement	Per MIL-STD-1560; see page C-2						
Contact Termination	P, X, C, S, Z, D						
Keyway Position	A, B, C, D; (N for Normal)						

MS Sample Part No.	MS27470	Y	11	N	35	P	A
MS Number and Cl	MS27470						
Class	Y						
Shell Size	9 thru 25						
Material and Finish	D, E, N						
Insert Arrangement	Per MIL-STD-1560; see page C-2						
Contact Termination	P, X, C, S, Z, D						
Keyway Position	A, B, C, D; (Omit for Normal)						

MS PART NUMBER DETAILS

Shell Style and Class

MS27470Y = hermetic, Jam-nut mount receptacle

Shell Size

9, 11, 13, 15, 17, 19, 21, 23, 25

Connector Material and Finish

D = carbon steel, fused tin finish, 150° C, conductive

E = stainless steel, passivate finish, 200° C, conductive

N = stainless steel, nickel finish (electrodeposited), 200° C conductive

Insert Arrangement

MIL-DTL-38999 Series I hermetic inserts per MIL-STD-1560; Refer to Insert Arrangements on page B-2

Contact Termination (500-cycle contacts)

P = pin, solder cup
X = pin, eyelet
C = pin, feedthru
S = socket, solder cup
Z = socket, eyelet
D = socket, feedthru

Alternate Key Position

A, B, C, D; (**N** for normal)

COTS PART NUMBER DETAILS

Shell Style and Class

231-100-H7 = hermetic, solder-mount receptacle

Connector Material and Finish

ZL = carbon steel, fused tin finish, 150° C, conductive

Z1 = stainless steel, passivate finish, 200° C, conductive

FT = stainless steel, nickel finish (electrodeposited), 200° C, conductive

Shell Size

9, 11, 13, 15, 17, 19, 21, 23, 25

Insert Arrangement

MIL-DTL-38999 Series I hermetic inserts per MIL-STD-1560; Refer to Insert Arrangements on page B-2

Contact Termination (500-cycle contacts)

P = pin, solder cup
X = pin, eyelet
C = pin, feedthru
S = socket, solder cup
Z = socket, eyelet
D = socket, feedthru

Alternate Key Position

A, B, C, D; (**N** for normal)

HERMETIC LEAK RATE MODIFICATION CODES

Designator	Required Leak Rate
-585A	1x10^{-10} atm ccHe/s per sec
-585B	1x10^{-9} ccHe/s per sec
-585C	1x10^{-8} ccHe/s per sec

WIRE ACCOMMODATION

Contact Size	Wire Guage
22D	#22 - #28
20	#20 - #24
16	#16 - #20
12	#12 - #14

© 2025 Glenair, Inc • 1211 Air Way, Glendale, CA 91201 • 818-247-6000 • www.glenair.com • U.S. CAGE code 06324 •

MIL-DTL-38999 Series I Type
231-100-H7 and MS27470 Jam-nut mount receptacle

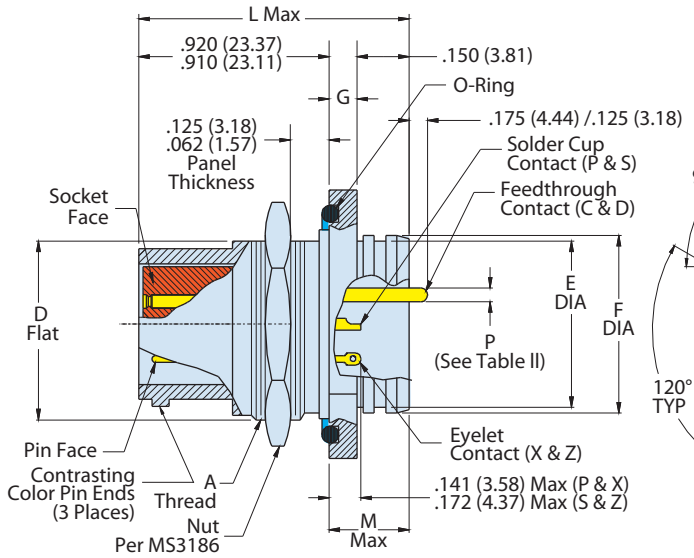

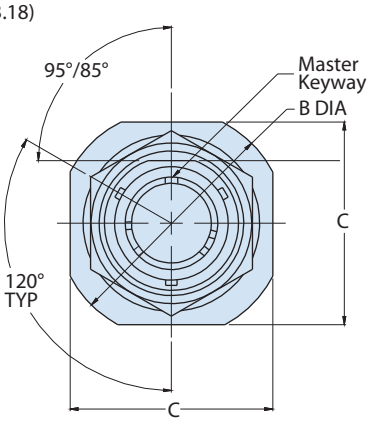

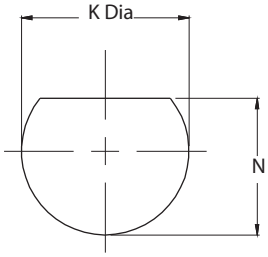

Recommended Panel Cut-Out

TABLE II: CONTACT SIZE

PCB CONTACT STYLE C AND D

SIZE 12 AND 16

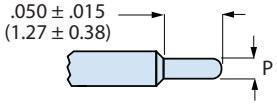

SIZE 22D AND SIZE 20
(#20 INACTIVE FOR NEW DESIGN)

Size	ø P
22D	.011 (0.28) .015 (0.38)
20	.024 (0.61) .028 (0.71)
16	.0635 (1.61) .0615 (1.56)
12	.095 (2.41) .093 (2.36)

CONNECTOR DIMENSIONS

Shell Size	A Thread Class 2a	B Dia ±.016 (0.4)	C ±.016 (0.4)	D Flat ±.005 (0.1)	E Dia ±.011 (0.3)	F Dia ±.005 (0.1)	G ±.016 (0.4)	K Dia ±.005 (0.1)	L Max	M Max	N ± .004 (0.1)
9	.6875-24 UNEF	1.188 (30.2)	1.062 (27.0)	.65 (16.5)	.602 (15.3)	.648 (16.5)	.109 (2.8)	.698 (17.7)	1.200 (30.5)	.280 (7.1)	.657 (16.69)*
11	.8125-20 UNEF	1.375 (34.9)	1.25 (31.8)	.75 (19.1)	.726 (18.4)	.772 (19.6)	.109 (2.8)	.830 (21.1)	1.200 (30.5)	.280 (7.1)	.765 (19.43)
13	1.000-20 UNEF	1.5 (38.1)	1.375 (34.9)	.937 (23.8)	.852 (21.6)	.898 (22.8)	.109 (2.8)	1.015 (25.8)	1.200 (30.5)	.280 (7.1)	.949 (24.10)
15	1.125-18 UNEF	1.625 (41.3)	1.5 (38.1)	1.061 (26.9)	.978 (24.8)	1.024 (26.0)	.109 (2.8)	1.140 (29.0)	1.200 (30.5)	.280 (7.1)	1.079 (27.41)
17	1.250-18 UNEF	1.75 (44.5)	1.625 (41.3)	1.186 (30.1)	1.102 (28.0)	1.148 (29.2)	.109 2.8)	1.265 (32.1)	1.200 (30.5)	.280 (7.1)	1.204 (30.58)
19	1.375-18 UNEF	1.938 (49.2)	1.812 (46.0)	1.311 (33.3)	1.228 (31.2)	1.274 (32.4)	.140 (3.6)	1.390 (35.3)	1.231 (31.3)	.311 (7.9)	1.329 (33.76)
21	1.500-18 UNEF	2.062 (52.4)	1.938 (49.2)	1.436 (36.5)	1.352 (34.3)	1.398 (35.5)	.140 (3.6)	1.515 (38.5)	1.231 (31.3)	.311 (7.9)	1.454 (36.93)
23	1.625-18 UNEF	2.188 (55.6)	2.062 (52.4)	1.561 (39.6)	1.478 (37.5)	1.524 (38.7)	.140 (3.6)	1.640 (41.7)	1.231 (31.3)	.311 (7.9)	1.579 (40.11)
25	1.750-18 UNS	2.312 (58.7)	2.188 (55.6)	1.686 (42.8)	1.602 (40.7)	1.648 (41.9)	.140 (3.6)	1.765 (44.8)	1.231 (31.3)	.311 (7.9)	1.704 (43.28)

* for shell size 9 only 'N' tolerance value is: +.004 (0.10)/-.002 (0.05)

INSERT ARRANGEMENTS

Shell Size - Insert Arrangement	22D	20	16	12
	Number of Pins			
9-98		3		
9-35	6			
11-4		4		
11-5		5		
11-98		6		
11-99		7		
11-35	13	7		
11-2			2	
13-4			4	
13-8		8		
13-98		10		
13-35	22			
15-5			5	
15-15		14	1	
15-18		18		
15-19		19		
15-35	37			
15-97		8	4	
17-6				6
17-8			8	
17-26		26		
17-99		21	2	
17-35	55			
19-11			11	
19-28		26	2	
19-30		29	1	
19-32		32		
19-35	66			
19-45	67			
21-11				11
21-16			16	
21-24		24		
21-25		25		
21-27		27		
21-41		41		
21-29		19	4	4
21-39		37	2	
21-35	79			
23-35	100			
23-21			21	
23-32		32		
23-34		34		
23-36		36		
23-53		53		
23-97			16	
23-99			11	
23-55		55		
25-35	128			
25-29			29	
25-37			37	
25-61		61		
25-4		48	8	
25-43		23	20	
25-19				19
25-24			12	12

© 2025 Glenair, Inc • 1211 Air Way, Glendale, CA 91201 • 818-247-6000 • www.glenair.com • U.S. CAGE code 06324 •
SuperNine MIL-DTL-38999 Series I Type · Dimensions in Inches (millimeters) are subject to change without notice.

MIL-DTL-38999 Series I Type
231-100-H0 Wall-mount hermetic receptacle

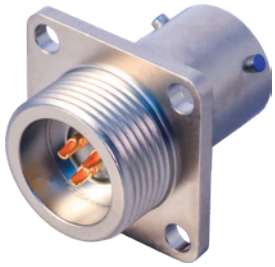

CONNECTOR FEATURES

- Bayonet coupling for rapid mating
- Scoop proof technology
- MIL-STD-1560 insert arrangements
- Same EMI performance as D38999 Series III
- Quick turn, positive lock, full mate indicator
- 500 cycles per D38999
- Enhanced finishes like passivated stainless steel and electrodeposited nickel over stainless steel
- Available in Jam-nut, solder and box mount
- Meets 1 x 10^{-7} cc/sec He leak requirement
- Hi-reliability stainless steel bayonets utilized

HOW TO ORDER

Sample Part Number	231-100-H7	Z1	11	35	P	N
Basic Part Number	**231-100-H7** **231-100-H0** **231-100-H5**					
Connector Material and Finish	**ZL** - CRES, Nickel **Z1** - CRES, Passivated **FT** - Carbon Steel, Fused Tin					
Shell Size	**09**, **11**, **13**, **15**, **17**, **19**, **21**, **23**, **25**					
Insert Arrangement	Per MIL-STD-1560; **See Pages C-2 - C-4**					
Contact Termination	**P** - Pin, Solder Cup **S** - Socket, Solder Cup **X** - Pin, Eyelet **Z** - Socket, Eyelet **C** - Pin, Feedthru **D** - Socket, Feedthru					
Alternate Key Position	**A**, **B**, **C**, **D** (**N** = Normal)					

HERMETIC CONTACT ARRANGEMENTS

Shell Size	MS Series I	Number of Pins 22D	20	16	12	Shell Size	MS Series I	Number of Pins 22D	20	16	12	Shell Size	MS Series I	Number of Pins 22D	20	16	12
9	9-35	6				9	9-98		3			15	15-97		8	4	
11	11-35	13				11	11-4		4			17	17-26		26		
13	13-35	22				11	11-5		5			17	17-99		21	2	
15	15-35	37				11	11-98		6			19	19-28		26	2	
17	17-35	55				11	11-99		7			19	19-30		29	1	
19	19-35	66				13	13-8		8			19	19-32		32		
19	19-45	67				13	13-98		10			21	21-24		24		
21	21-35	79				15	15-15		14	1		21	21-25		25		
23	23-35	100				15	15-18		18			21	21-29		19	4	4
25	25-35	128				15	15-19		19			21	21-27		27		

HERMETIC CONTACT ARRANGEMENTS

Shell Size	MS Series I	Number of Pins 22D	20	16	12	Shell Size	MS Series I	Number of Pins 22D	20	16	12	Shell Size	MS Series I	Number of Pins 22D	20	16	12
21	21-39		37	2		25	25-61		61			23	23-99			11	
21	21-41		41			11	11-2			2		25	25-24			12	12
23	23-32		32			13	13-4			4		25	25-29			29	
23	23-34		34			15	15-5			5		25	25-37			37	
23	23-36		36			17	17-8			8		17	17-6				6
23	23-53		53			19	19-11			11		21	21-11				11
23	23-55		55			21	21-16			16		25	25-19				19
25	25-4		48	8		23	23-21			21							
25	25-43		23	20		23	23-97			16							

TABLE II: CONTACT SIZE

PRINTED CIRCUIT TAIL CONFIGURATIONS CONTACT STYLE C AND D

SIZE 12 AND SIZE 16

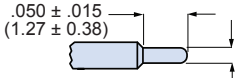

SIZE 22D AND SIZE 20 P

Contact Size	ø P
22D	.011 (0.28); .015 (0.38)
20	.024 (0.61); .028 (0.71)
16	.0635 (1.61); .0615 (1.56)
12	.095 (2.41); .093 (2.36)

WIRE ACCOMODATION

Contact Size	Wire Guage
22D	#22 - #28
20	#20 - #24
16	#16 - #20
12	#12 - #14

HERMETIC LEAK RATE MOD CODES

Designator	Required Leak Rate
-585A	1 x 10^{-10} cc Helium per second
-585B	1 x 10^{-9} cc Helium per second
-585C	1 x 10^{-8} cc Helium per second

© 2025 Glenair, Inc • 1211 Air Way, Glendale, CA 91201 • 818-247-6000 • www.glenair.com • U.S. CAGE code 06324 •

MIL-DTL-38999 Series I Type
231-100-H0 Wall-mount hermetic receptacle

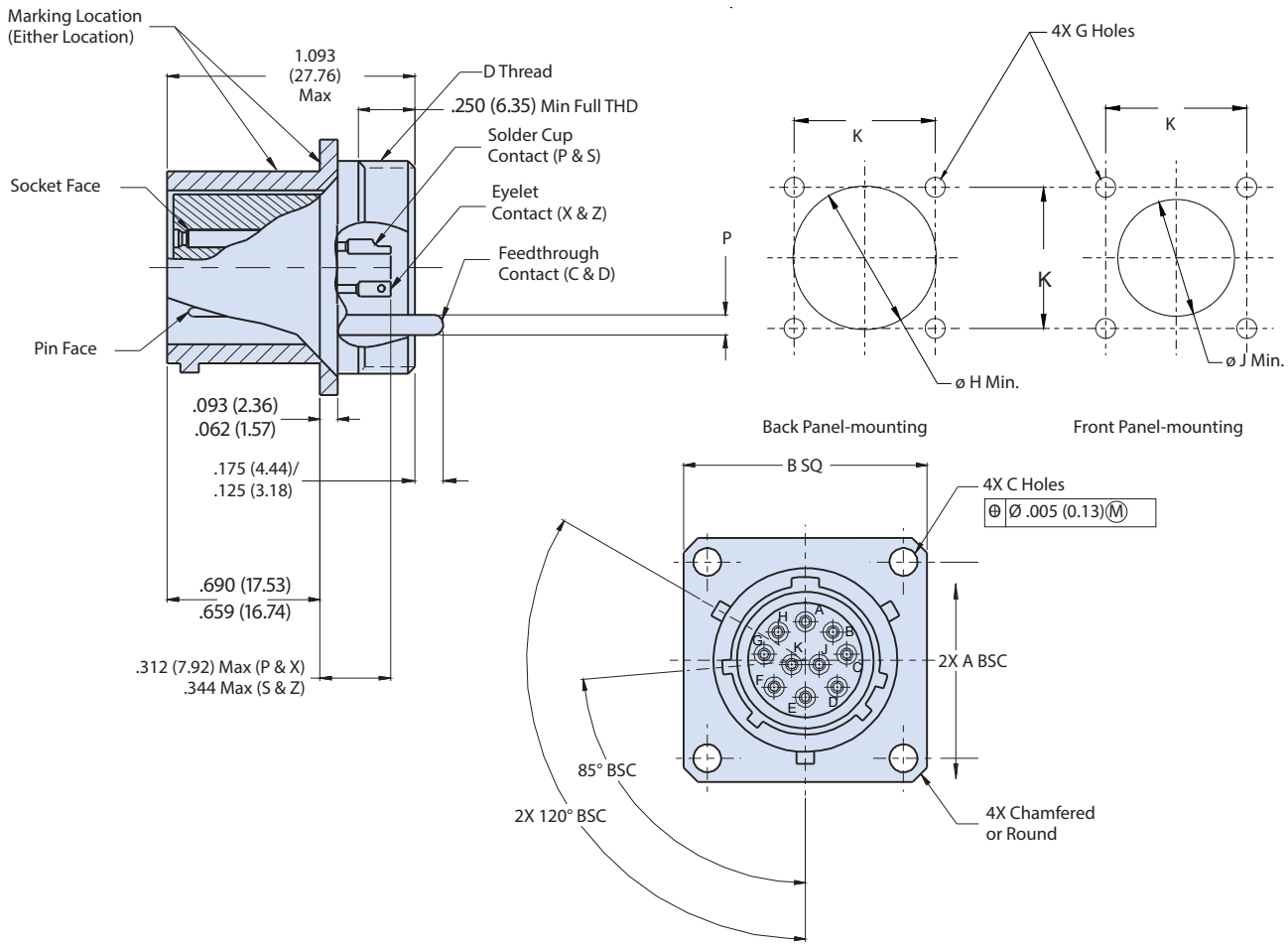

TABLE I: CONNECTOR DIMENSIONS					TABLE I (CONTINUED): CONNECTOR DIMENSIONS				
Shell Size	A BSC	B SQ ±.016(0.4)	ø C Holes	D Threads	Shell Size	ø G Holes ±.005(0.1)	ø H Min	ø J Min	K ±.005(0.1)
9/09	.719(18.3)	.938(23.8)	.133(3.4); .123(3.1)	.6875-24 UNEF-2A	9/09	.128(3.3)	.656(16.7)	.697(17.7)	.719(18.3)
11	.812(20.6)	1.031(26.2)	.133(3.4); .123(3.1)	.8125-20 UNEF-2A	11	.128(3.3)	.796(20.2)	.822(20.9)	.812(20.6)
13	.906(23.0)	1.125(28.6)	.133(3.4); .123(3.1)	.9375-20 UNEF-2A	13	.128(3.3)	.921(23.4)	.947(24.1)	.906(23.0)
15	.969(24.6)	1.219(31.0)	.133(3.4); .123(3.1)	1.0625-18 UNEF-2A	15	.128(3.3)	1.047(26.6)	1.072(27.2)	.968(24.6)
17	1.062(27.0)	1.312(33.3)	.133(3.4); .123(3.1)	1.1875-18 UNEF-2A	17	.128(3.3)	1.218(30.9)	1.197(30.4)	1.062(27.0)
19	1.156(29.4)	1.438(36.5)	.133(3.4); .123(3.1)	1.3125-18 UNEF-2A	19	.128(3.3)	1.296(32.9)	1.322(33.6)	1.156(29.4)
21	1.250(31.8)	1.562(39.7)	.133(3.4); .123(3.1)	1.4375-18 UNEF-2A	21	.128(3.3)	1.421(36.1)	1.447(36.8)	1.250(31.8)
23	1.375(34.9)	1.688(42.9)	.157(4.0); .142(3.6)	1.5625-18 UNEF-2A	23	.154(3.9)	1.546(39.3)	1.572(39.9)	1.375(34.9)
25	1.500(38.1)	1.812(46.0)	.157(4.0); .142(3.6)	1.6875-18 UNEF-2A	25	.154(3.9)	1.672(42.5)	1.697(43.1)	1.500(38.1)

© 2025 Glenair, Inc • 1211 Air Way, Glendale, CA 91201 • 818-247-6000 • www.glenair.com • U.S. CAGE code 06324 •
SuperNine MIL-DTL-38999 Series I Type · Dimensions in Inches (millimeters) are subject to change without notice.

MIL-DTL-38999 Series I Type
231-100-H5 Solder-mount hermetic receptacle

CONNECTOR FEATURES

- Bayonet coupling for rapid mating
- Scoop proof technology
- MIL-STD-1560 insert arrangements
- Same EMI performance as D38999 Series III
- Quick turn, positive lock, full mate indicator
- 500 cycles per D38999
- Enhanced finishes like Passivated stainless steel and Electrodeposited Nickel over stainless steel
- Available in Jam-nut, solder and box mount
- Meets 1 x 10^{-7} cc/sec He leak requirement
- Hi-reliability stainless steel bayonets utilized

HOW TO ORDER

Sample Part Number	231-100-H0	Z1	11	35	P	N

Basic Part Number	**231-100-H0**
Connector Material and Finish	**ZL** = CRES, Nickel **Z1** = CRES, Passivated **FT** = Carbon Steel, Fused Tin
Shell Size	**09**, **11**, **13**, **15**, **17**, **19**, **21**, **23**, **25**
Insert Arrangement	Per MIL-STD-1560; **See Pages C-2 - C-4**
Contact Termination	**P** = Pin, Solder Cup **S** = Socket, Solder Cup **X** = Pin, Eyelet **Z** = Socket, Eyelet **C** = Pin, PCB **D** = Socket, PCB
Alternate Key Position	**A**, **B**, **C**, **D** (**N** = Normal)

TABLE I: CONNECTOR DIMENSIONS

Shell Size	ø A ±.016(0.4)	ø B	C Max	ø H ±.005(0.1)
9/09	.750(19.1)	.673(17.1) .667(16.9)	.187(4.7)	.680(17.3)
11	.844(21.4)	.782(19.9) .776(19.7)		.789(20.0)
13	.969(24.6)	.907(23.0) .901(22.9)		.914(23.2)
15	1.094(27.8)	1.032(26.2) 1.027(26.1)		1.038(26.4)
17	1.218(30.9)	1.157(29.4) 1.151(29.2)		1.164(29.6)
19	1.312(33.3)	1.251(31.8) 1.245(31.6)		1.258(32.0)
21	1.438(36.5)	1.376(35.0) 1.370(34.8)		1.383(35.1)
23	1.563(39.7)	1.501(38.1) 1.495(38.0)	.218(5.5)	1.508(38.3)
25	1.688(42.9)	1.626(41.3) 1.620(41.1)		1.643(41.7)

TABLE II: CONTACT SIZE

PRINTED CIRCUIT TAIL CONFIGURATIONS CONTACT STYLE C AND D

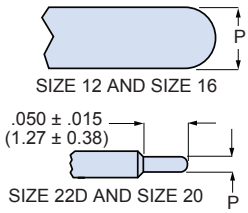

Contact Size	ø P
22D	.011 (0.28) .015 (0.38)
20	.024 (0.61) .028 (0.71)
16	.0635 (1.61) .0615 (1.56)
12	.095 (2.41) .093 (2.36)

HERMETIC LEAK RATE MOD CODES

Designator	Required Leak Rate
-585A	1 x 10^{-10} cc Helium per second
-585B	1 x 10^{-9} cc Helium per second
-585C	1 x 10^{-8} cc Helium per second

WIRE ACCOMODATION

Contact Size	Wire Guage
22D	#22 - #28
20	#20 - #24
16	#16 - #20
12	#12 - #14

© 2025 Glenair, Inc • 1211 Air Way, Glendale, CA 91201 • 818-247-6000 • www.glenair.com • U.S. CAGE code 06324 •

MIL-DTL-38999 Series I Type
231-100-H7 Jam-nut mount hermetic receptacle

CONNECTOR FEATURES

- Bayonet coupling for rapid mating
- Scoop proof technology
- MIL-STD-1560 insert arrangements
- Same EMI performance as D38999 Series III
- Quick turn, positive lock, full mate indicator
- 500 cycles per D38999
- Enhanced finishes like passivated stainless steel and electrodeposited nickel over stainless steel
- Available in Jam-nut, solder and box mount
- Meets 1 x 10^{-7} cc/sec He leak requirement
- Hi-reliability stainless steel bayonets utilized

TABLE I: CONNECTOR DIMENSIONS

Shell Size	A Thread Class 2A	B DIA ±.016(0.4)	C ±.016(0.4)	D Flat ±.005(0.1)	E DIA ±.011(0.3)	F DIA ±.005(0.1)
9/09	.6875-24 UNEF	1.188(30.2)	1.062(27.0)	.65(16.5)	.602(15.3)	.648(16.5)
11	.8125-20 UNEF	1.375(34.9)	1.25(31.8)	.75(19.1)	.726(18.4)	.772(19.6)
13	1.000-20 UNEF	1.5(38.1)	1.375(34.9)	.937(23.8)	.852(21.6)	.898(22.8)
15	1.125-18 UNEF	1.625(41.3)	1.5(38.1)	1.061(26.9)	.978(24.8)	1.024(26.0)
17	1.250-18 UNEF	1.75(44.5)	1.625(41.3)	1.186(30.1)	1.102(28.0)	1.148(29.2)
19	1.375-18 UNEF	1.938(49.2)	1.812(46.0)	1.311(33.3)	1.228(31.2)	1.274(32.4)
21	1.500-18 UNEF	2.062(52.4)	1.938(49.2)	1.436(36.5)	1.352(34.3)	1.398(35.5)
23	1.625-18 UNEF	2.188(55.6)	2.062(52.4)	1.561(39.6)	1.478(37.5)	1.524(38.7)
25	1.750-18 UNS	2.312(58.7)	2.188(55.6)	1.686(42.8)	1.602(40.7)	1.648(41.9)

TABLE I (CONTINUED): CONNECTOR DIMENSIONS

Shell Size	G ±.016(0.4)	K DIA ±.005 (0.1)	L Max	M Max	N ± .004 (0.1)
9/09	.109 (2.8)	.698 (17.7)	1.200 (30.5)	.280 (7.1)	.657 (16.7); +.004(.1)/-.002(.1)
11	.109 (2.8)	.830 (21.1)	1.200 (30.5)	.280 (7.1)	.765 (19.43)
13	.109 (2.8)	1.015 (25.8)	1.200 (30.5)	.280 (7.1)	.949 (24.10)
15	.109 (2.8)	1.140 (29.0)	1.200 (30.5)	.280 (7.1)	1.079 (27.41)
17	.109 (2.8)	1.265 (32.1)	1.200 (30.5)	.280 (7.1)	1.204 (30.58)
19	.140 (3.6)	1.390 (35.3)	1.231 (31.3)	.311 (7.9)	1.329 (33.76)
21	.140 (3.6)	1.515 (38.5)	1.231 (31.3)	.311 (7.9)	1.454 (36.93)
23	.140 (3.6)	1.640 (41.7)	1.231 (31.3)	.311 (7.9)	1.579 (40.11)
25	.140 (3.6)	1.765 (44.8)	1.231 (31.3)	.311 (7.9)	1.704 (43.28)

TABLE LL: CONTACT SIZE

PRINTED CIRCUIT TAIL CONFIGURATIONS CONTACT STYLE C AND D

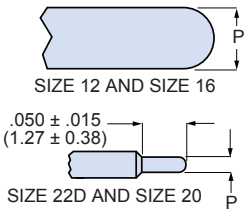

Contact Size	ø P
22D	.011 (0.28); .015 (0.38)
20	.024 (0.61); .028 (0.71)
16	.0635 (1.61); .0615 (1.56)
12	.095 (2.41); .093 (2.36)

HERMETIC LEAK RATE MOD CODES

Designator	Required Leak Rate
-585A	1 x 10^{-10} cc Helium per second
-585B	1 x 10^{-9} cc Helium per second
-585C	1 x 10^{-8} cc Helium per second

WIRE ACCOMODATION

Contact Size	Wire Guage
22D	#22 - #28
20	#20 - #24
16	#16 - #20
12	#12 - #14

© 2025 Glenair, Inc • 1211 Air Way, Glendale, CA 91201 • 818-247-6000 • www.glenair.com • U.S. CAGE code 06324 •
SuperNine MIL-DTL-38999 Series I Type · Dimensions in Inches (millimeters) are subject to change without notice.

MIL-DTL-38999 Series I Type
231-100-H7 Jam-nut mount hermetic receptacle

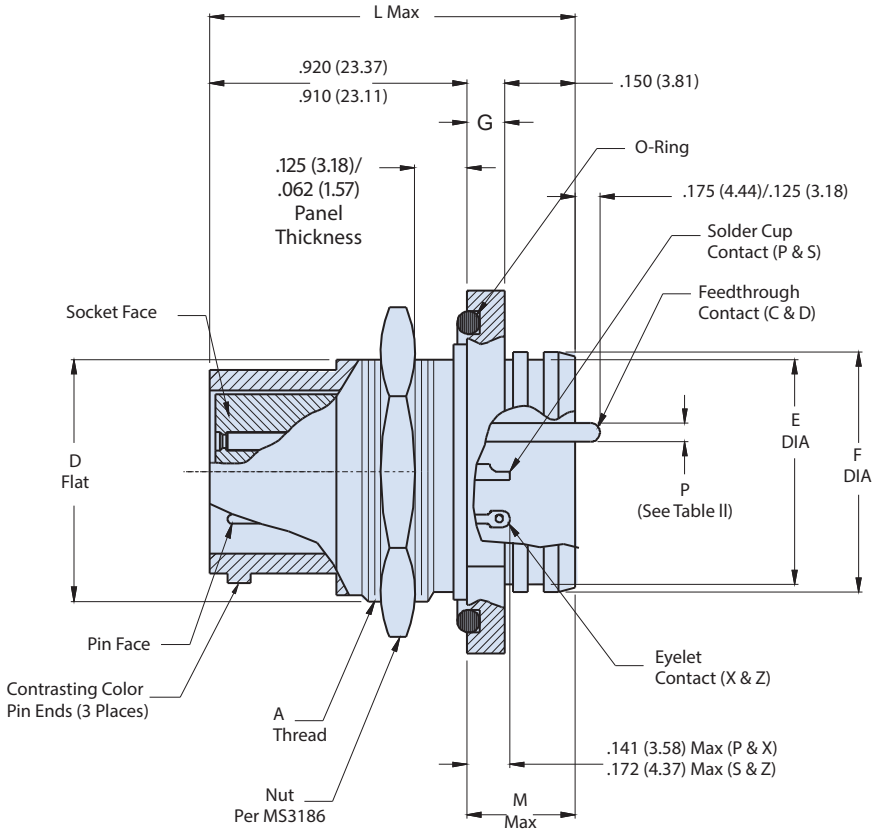

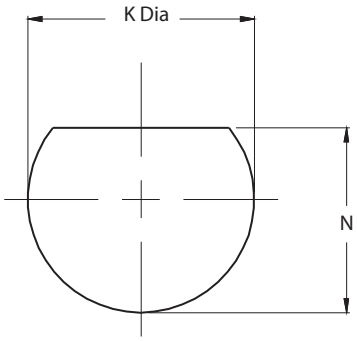

Recommended Panel Cut-Out

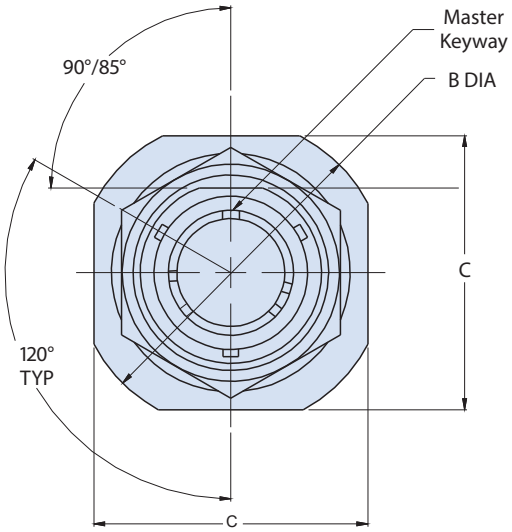

MIL-DTL-38999 Series I Type
231-106 Connector with crimp-removable socket contacts

HOW TO ORDER

Sample Part Number	231-106	H7	Z1	11	-35	S	N

Basic Part Number	**231-106**
Shell Style	**H7** = Jam-nut Mount **Z1** = Wall-mount **H0** =Solder-mount
Finish	**Z1** = Passivated **ZL** = Electrodeposited Nickel
Shell Size	**09**, **11**, **13**, **15**, **17**, **19**, **21**, **23**, **25**
Insert Arrangement	Per MIL-STD-1560; **See Pages C-2 - C-4**
Contact Style	**P** = Pin Face **S** = Socket Face
Alternate Key Position	**A**, **B**, **C**, **D** (**N** = Normal)

CONNECTOR FEATURES

- Bayonet coupling for rapid mating
- Scoop proof technology
- MIL-STD-1560 insert arrangements
- Same EMI performance as D38999 Series III
- Quick turn, positive lock, full mate indicator
- 500 cycles per D38999
- Enhanced finishes like Passivated stainless steel and Electrodeposited Nickel over stainless steel
- Available in Jam-nut, solder and box mount
- Meets 1 x 10^{-7} cc/sec He leak requirement
- Hi-reliability stainless steel bayonets utilized

TABLE II - MASTER KEYWAY POLARIZATION POSITION

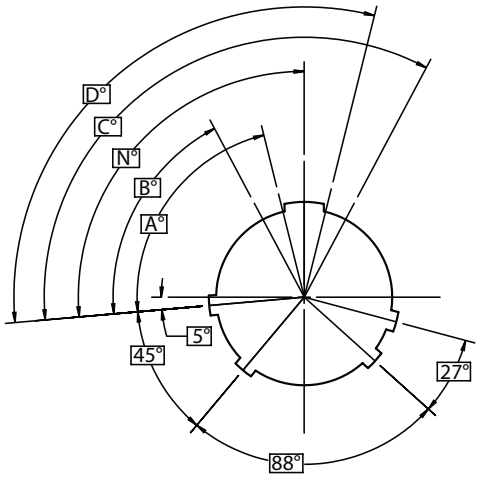

Shell Size	Normal	A	B	C	D
9	95	77	-	-	113
11	95	81	67	123	109
13	95	75	63	127	115
15	95	74	61	129	116
17	95	77	65	125	113
19	95	77	65	125	113
21	95	77	65	125	113
23	95	80	69	121	110
25	95	80	69	121	110

TABLE III - DWV VOLTAGE LEVELS @ SEA LEVEL

Serivce Rating	Voltage AC RMS 60 Hz
M	1300 VAC
I	1800 VAC
II	2300 VAC
N	1000 VAC

© 2025 Glenair, Inc • 1211 Air Way, Glendale, CA 91201 • 818-247-6000 • www.glenair.com • U.S. CAGE code 06324 •
SuperNine MIL-DTL-38999 Series I Type · Dimensions in Inches (millimeters) are subject to change without notice.

MIL-DTL-38999 Series I Type
231-106 Connector with crimp-removable socket contacts

-H0 WALL-MOUNT

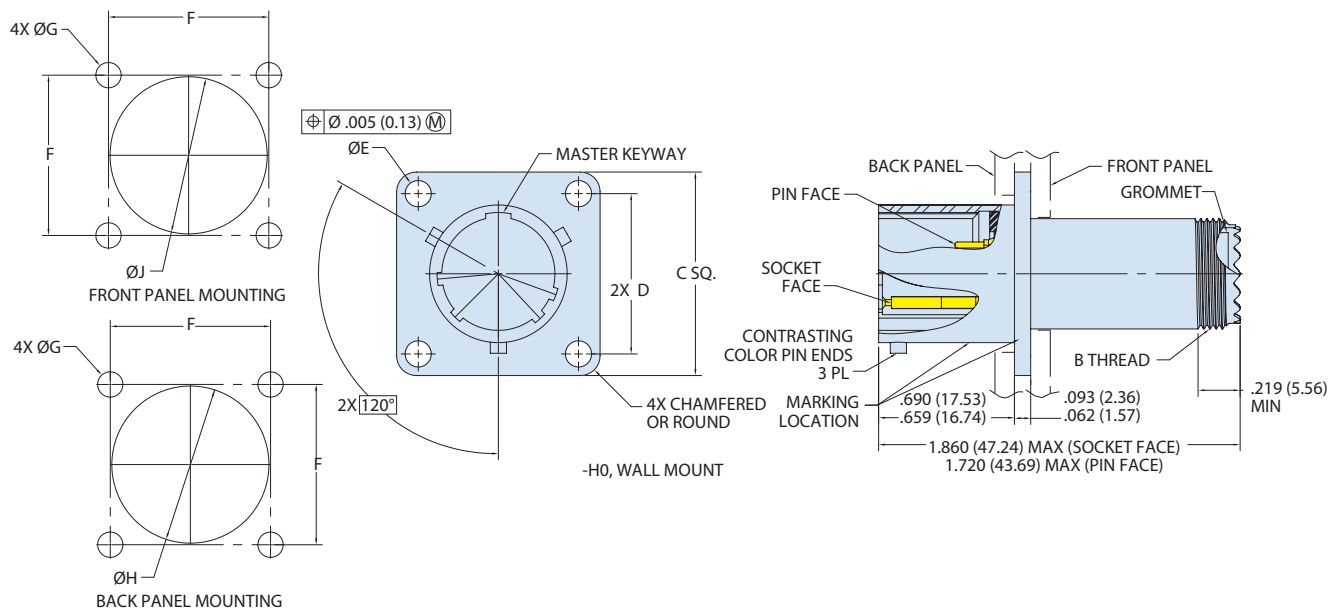

TABLE I: CONNECTOR DIMENSIONS

Shell Size	A Threads	B Threads	C	D Bsc	E	F	G	H Min	J Min	K	L	M	N	P Flat	R	T	U
9	.6875-24 UNEF	.4375-28 UNEF	.954 (24.23) .922 (23.42)	0.719 (18.26)	.133 (3.38) .123 (3.12)	.724 (18.39) .714 (18.14)	.133 (3.38) .123 (3.12)	0.656 (16.66)	0.447 (11.35)	.766 (19.46) .734 (18.64)	.449 (11.40) .439 (11.15)	1.078 (27.38) 1.046 (26.57)	1.204 (30.58) 1.172 (29.77)	.655 (16.64) .645 (16.38)	.125 (3.18) .093 (2.36)	.661 (16.79) .655 (16.64)	.703 (17.86) .693 (17.60)
11	.8125-20 UNEF	.5625-24 UNEF	1.047 (26.59) 1.015 (25.78)	0.812 (20.62)	0.133 (3.38) 0.123 (3.12)	0.817 (20.75) 0.807 (20.50)	0.133 (3.38) 0.123 (3.12)	0.796 (20.22)	0.572 (14.53)	0.860 (21.84) 0.828 (21.03)	0.574 (14.58) 0.564 (14.33)	1.266 (32.16) 1.234 (31.34)	1.391 (35.33) 1.359 (34.52)	0.755 (19.18) 0.745 (18.92)	0.125 (3.18) 0.093 (2.36)	0.769 (19.53) 0.761 (19.33)	0.835 (21.21) 0.825 (20.96)
13	1.000-20 UNEF	.6875-24 UNEF	1.141 (28.98) 1.109 (28.17)	0.906 (23.01)	0.133 (3.38) 0.123 (3.12)	0.911 (23.14) 0.901 (22.89)	0.133 (3.38) 0.123 (3.12)	0.921 (23.39)	0.697 (17.70)	0.985 (25.02) 0.953 (24.21)	0.699 (17.75) 0.689 (17.50)	1.391 (35.33) 1.359 (34.52)	1.516 (38.51) 1.484 (37.69)	0.942 (23.93) 0.932 (23.67)	0.125 (3.18) 0.093 (2.36)	0.953 (24.21) 0.945 (24.00)	1.020 (25.91) 1.010 (25.65)
15	1.125-18 UNEF	.8125-20 UNEF	1.235 (31.37) 1.203 (30.56)	0.969 (24.61)	0.133 (3.38) 0.123 (3.12)	0.973 (24.71) 0.963 (24.46)	0.133 (3.38) 0.123 (3.12)	1.047 (26.59)	0.822 (20.88)	1.110 (28.19) 1.078 (27.38)	0.824 (20.93) 0.814 (20.68)	1.516 (38.51) 1.484 (37.69)	1.641 (41.68) 1.609 (40.87)	1.066 (27.08) 1.056 (26.82)	0.125 (3.18) 0.093 (2.36)	1.083 (27.51) 1.075 (27.31)	1.145 (29.08) 1.135 (28.83)
17	1.250-18 UNEF	.9375-20 UNEF	1.328 (33.73) 1.296 (32.92)	1.062 (26.97)	0.133 (3.38) 0.123 (3.12)	1.067 (27.10) 1.057 (26.85)	0.133 (3.38) 0.123 (3.12)	1.218 (30.94)	0.947 (24.05)	1.234 (31.34) 1.202 (30.53)	0.949 (24.10) 0.939 (23.85)	1.641 (41.68) 1.609 (40.87)	1.766 (44.86) 1.734 (44.04)	1.191 (30.25) 1.181 (30.00)	0.125 (3.18) 0.093 (2.36)	1.208 (30.68) 1.200 (30.48)	1.270 (32.26) 1.260 (32.00)
19	1.375-18 UNEF	1.0625-18 UNEF	1.454 (36.93) 1.422 (36.12)	1.156 (29.36)	0.133 (3.38) 0.123 (3.12)	1.161 (29.49) 1.151 (29.24)	0.133 (3.38) 0.123 (3.12)	1.296 (32.92)	1.072 (27.23)	1.328 (33.73) 1.296 (32.92)	1.074 (27.28) 1.064 (27.03)	1.828 (46.43) 1.796 (45.62)	1.954 (49.63) 1.922 (48.82)	1.316 (33.43) 1.306 (33.17)	0.156 (3.96) 0.124 (3.15)	1.333 (33.86) 1.325 (33.66)	1.395 (35.43) 1.385 (35.18)
21	1.500-18 UNEF	1.1875-18 UNEF	1.578 (40.08) 1.546 (39.27)	1.250 (31.75)	0.133 (3.38) 0.123 (3.12)	1.255 (31.88) 1.245 (31.62)	0.133 (3.38) 0.123 (3.12)	1.421 (36.09)	1.197 (30.40)	1.454 (36.93) 1.422 (36.12)	1.199 (30.45) 1.189 (30.20)	1.954 (49.63) 1.922 (48.82)	2.078 (52.78) 2.046 (51.97)	1.441 (36.60) 1.431 (36.35)	0.156 (3.96) 0.124 (3.15)	1.458 (37.03) 1.450 (36.83)	1.520 (38.61) 1.510 (38.35)
23	1.625-18 UNEF	1.3125-18 UNEF	1.704 (43.28) 1.672 (42.47)	1.375 (34.93)	.157 (3.99) .142 (3.61)	1.380 (35.05) 1.370 (34.80)	.159 (4.04) .149 (3.78)	1.546 (39.27)	1.322 (33.58)	1.579 (40.11) 1.547 (39.29)	1.324 (33.63) 1.314 (33.38)	2.078 (52.78) 2.046 (51.97)	2.204 (55.98) 2.172 (55.17)	1.566 (39.78) 1.556 (39.52)	.156 (3.96) .124 (3.15)	1.583 (40.21) 1.575 (40.01)	1.645 (41.78) 1.635 (41.53)
25	1.750-18 UNS	1.4375-18 UNEF	1.828 (46.43) 1.796 (45.62)	1.500 (38.10)	.157 (3.99) .142 (3.61)	1.505 (38.23) 1.495 (37.97)	.159 (4.04) .149 (3.78)	1.672 (42.47)	1.447 (36.75)	1.704 (43.28) 1.672 (42.47)	1.449 (36.80) 1.439 (36.55)	2.204 (55.98) 2.172 (55.17)	2.328 (59.13) 2.296 (58.32)	1.691 (42.95) 1.681 (42.70)	.156 (3.96) .124 (3.15)	1.708 (43.38) 1.700 (43.18)	1.770 (44.96) 1.760 (44.70)

© 2025 Glenair, Inc • 1211 Air Way, Glendale, CA 91201 • 818-247-6000 • www.glenair.com • U.S. CAGE code 06324 •
SuperNine MIL-DTL-38999 Series I Type · Dimensions in Inches (millimeters) are subject to change without notice.

MIL-DTL-38999 Series I Type
231-106 Connector with crimp-removable socket contacts

-H5 SOLDER-MOUNT

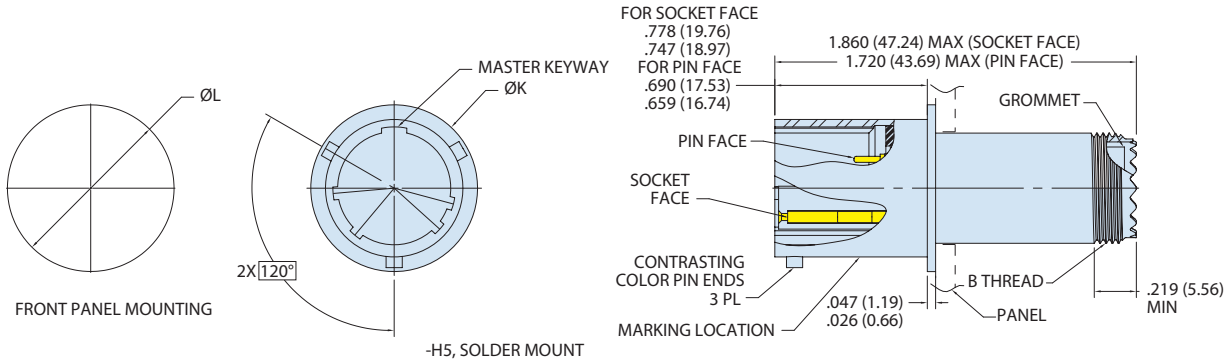

-H7 JAM-NUT MOUNT

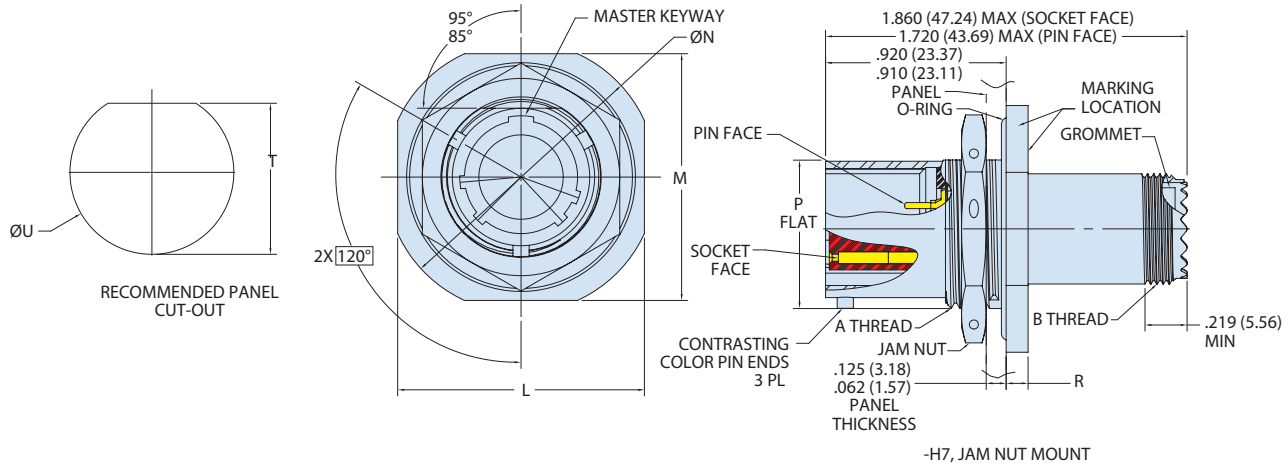

© 2025 Glenair, Inc • 1211 Air Way, Glendale, CA 91201 • 818-247-6000 • www.glenair.com • U.S. CAGE code 06324 •
SuperNine MIL-DTL-38999 Series I Type · Dimensions in Inches (millimeters) are subject to change without notice.

LIGHTWEIGHT, LOW RESISTANCE

CODE RED

"Mission-Critical" hermetic sealing with 1X10^{-7} leak-rate performance

Hermetically-sealed interconnects used in vacuum or high-altitude applications prevent moisture and other contaminants from damaging sensitive electronic equipment. Glass-to-metal hermetic sealing has been the gold standard in the aerospace and petrochemical industries for decades due to the strength and long-term durability of the materials used. But glass-to-metal seal hermetics come with a big price tag in both weight and electrical resistance.

CODE RED is an innovative sealing encapsulant and application process—invented by Glenair—that provides durable hermetic sealing in a lightweight aluminum package. CODE RED allows for the use of conventional gold-plated copper alloy contacts, significantly improving electrical performance. CODE RED hermetic connectors are available now in Glenair SuperNine® (D38999 Series III type metal and composite), Series 80 Mighty Mouse, and M24308 D-Sub; and deliver reliable, life-of-system 1X10^{-7} max leak-rate hermetic sealing. Special non-magnetic (zero residual magnetism) versions are also available, consult factory.

- **Full hermetic sealing, 1X10^{-7} in a lightweight aluminum shell with low electrical resistance gold-plated copper contacts**
- **Passed full D38999/23 qualification testing**
- **Meets NASA outgassing requirements, as well as aerospace temperature and corrosion resistance standards**
- **Operating temperature -65°C to +200°C**
- **Available today in Mighty Mouse 806 Mil-Aero, M24308/9 D-Sub and D38999/23**
- **Significant weight savings—up to +50%**
- **Order-of-magnitude improvement in current carrying capacity and electrical resistance compared to Kovar/ Inconel solutions**

MIL-DTL-38999 Series I Type
231-250 Code Red lightweight hermetic receptacle

CODE RED

CONNECTOR FEATURES

- Bayonet coupling for rapid mating
- Scoop proof technology
- MIL-STD-1560 insert arrangements
- Same EMI performance as D38999 Series III
- Quick turn, positive lock, full mate indicator
- 500 cycles per D38999
- Enhanced finishes like Passivated stainless steel and Electrodeposited Nickel over stainless steel
- Available in Jam-nut, solder and box mount
- Meets 1 x 10^{-7} cc/sec He leak requirement
- Hi-reliability stainless steel bayonets utilized

HOW TO ORDER

Sample Part Number	231-250	-D0	NF	17	-8	P	N

Basic Part Number	**231-250**
Connector Style	**07** = Receptacle, Jam-nut **D0** = Receptacle, Wall-mount Front Panel, Standard Holes **E0** = Receptacle, Extended Wall-mount, Back Panel, Standard Holes (MS27656T)
Material / Finish	See Table I
Connector Size	**9**, **11**, **13**, **15**, **17**, **19**, **21**, **23**, **25**
Insert Arrangement	Per MIL-STD-1560
Contact Style	**P** = Pin, Solder Cup **S** = Socket, Solder Cup **C** = Pin, PC Tail **D** = Socket, PC Tail
Alternate Polarization	**A**, **B**, **C**, **D** (**N** = Normal)

TABLE I - MATERIAL/FINISH

SYM	Material	Finish	Temp. Range
AB	Marine Bronze	None (Clean Only)	-65° to +200°C
MA	Aluminum Alloy	Electroless Nickel, Matte Finish	
ME		Electroless Nickel	
NF		Cad/O.D. Over Electroless Nickel	-65° to +175°C
ZN		Zinc Ni, Olive Drab	
ZR		Zinc Ni, Black (Tri-Valent Cr)	
Z1	Stainless Steel	CRES, Passivated	-65° to +200°C
ZL		CRES, Nickel Finish	

TABLE II - PC TAIL

Contact Size	Ø CC
22D	.020 .018
20	.030 .028
16	.040 .038
12	.072 .070

TABLE III - PANEL ACCOMMODATION

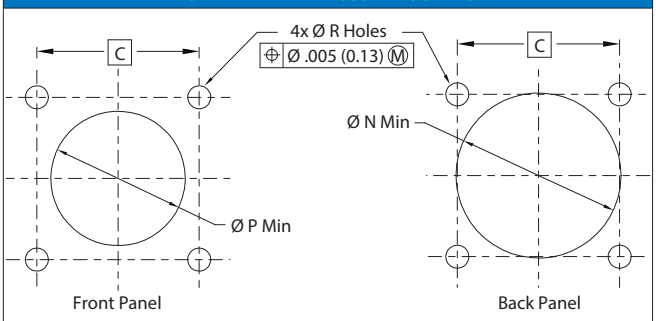

RECOMMENDED PANEL MOUNTING HOLES FOR WALL MOUNT RECEPTACLES

© 2022 Glenair, Inc • 1211 Air Way, Glendale, CA 91201 • 818-247-6000 • www.glenair.com • U.S. CAGE code 06324 •
SuperNine MIL-DTL-38999 Series I Type · Dimensions in Inches (millimeters) are subject to change without notice.

MIL-DTL-38999 Series I Type
231-250 Code Red lightweight hermetic receptacle

231-250-D0 WALL-MOUNT FRONT PANEL RECEPTACLE WITH STANDARD HOLES
231-250-E0 WALL-MOUNT BACK PANEL RECEPTACLE WITH STANDARD HOLES

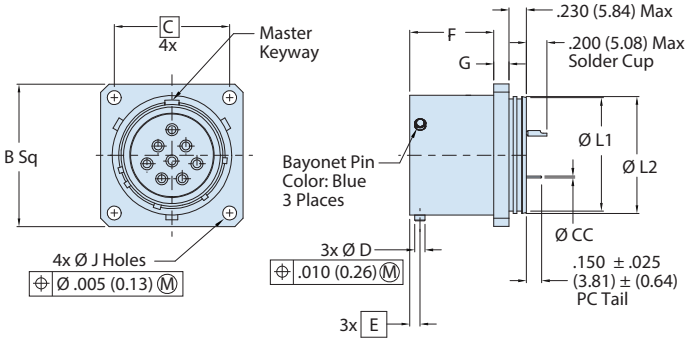

D0 - WALL MOUNT FRONT PANEL RECEPTACLE WITH STANDARD HOLES

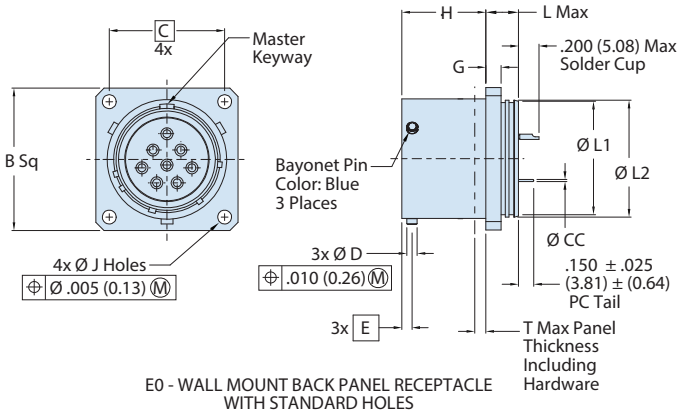

E0 - WALL MOUNT BACK PANEL RECEPTACLE WITH STANDARD HOLES

CONNECTOR AND PANEL-MOUNT DIMENSIONS

Shell Size Code	Shell Size	B Sq	C Bsc	ØD	E Bsc	F	G	G'	H	ØJ Holes	K	K'	L Max	ØL1 ±.012	ØL2 0.012 0.000	ØN Min	ØP Min	ØR Holes	T Max
A	9	0.958 (24.33) 0.918 (23.32)	0.719 (18.26)	0.084 (2.13) 0.076 (1.93)	0.100 (2.54)	0.632 (16.05) 0.627 (15.93)	0.100 (2.54) 0.085 (2.16)	0.179 (4.55) 0.140 (3.56)	0.820 (20.83) 0.815 (20.70)	0.138 (3.51) 0.123 (3.12)	.112-40 UNC-3B	M3X0.5	0.300 (7.62)	0.602 (15.29)	0.642 (16.31)	0.656 (16.66)	0.658 (16.71)	0.133 (3.38) 0.123 (3.12)	0.234 (5.94)
B	11	1.051 (26.70) 1.011 (25.68)	0.812 (20.62)											0.724 (18.39)	0.764 (19.41)	0.796 (20.22)	0.780 (19.81)		
C	13	1.145 (29.08) 1.105 (28.07)	0.906 (23.01)											0.850 (21.59)	0.894 (22.71)	0.922 (23.42)	0.910 (23.11)		
D	15	1.239 (31.47) 1.199 (30.45)	0.969 (24.61)											0.976 (24.79)	1.020 (25.91)	1.047 (26.59)	1.036 (26.31)		
E	17	1.332 (33.83) 1.292 (32.82)	1.062 (26.97)											1.102 (27.99)	1.142 (29.01)	1.219 (30.96)	1.158 (29.41)		
F	19	1.458 (37.03) 1.418 (36.02)	1.156 (29.36)											1.228 (31.19)	1.268 (32.21)	1.297 (32.94)	1.284 (32.61)		
G	21	1.582 (40.18) 1.542 (39.17)	1.250 (31.75)			0.602 (15.29) 0.597 (15.16)	0.130 (3.30) 0.115 (2.92)	0.190 (4.83) 0.170 (4.32)	0.790 (20.07) 0.785 (19.94)				0.330 (8.38)	1.350 (34.29)	1.394 (35.41)	1.422 (36.12)	1.410 (35.81)		0.204 (5.18)
H	23	1.708 (43.38) 1.668 (42.37)	1.375 (34.93)							0.157 (3.99)				1.476 (37.49)	1.520 (38.61)	1.547 (39.29)	1.536 (39.01)	0.159 (4.04) 0.149 (3.78)	
J	25	1.832 (46.53) 1.792 (45.52)	1.500 (38.10)	0.131 (3.33) 0.123 (3.12)	0.109 (2.77)					0.142 (3.61)	.138-32 UNC-3B	M4X0.7		1.602 (40.69)	1.642 (41.71)	1.672 (42.47)	1.658 (42.11)	0.155 (3.94) 0.145 (3.68)	0.193 (4.90)

© 2022 Glenair, Inc • 1211 Air Way, Glendale, CA 91201 • 818-247-6000 • www.glenair.com • U.S. CAGE code 06324 •

MIL-DTL-38999 Series I Type
231-250 Code Red lightweight hermetic receptacle

231-250-07 JAM-NUT MOUNT RECEPTACLE

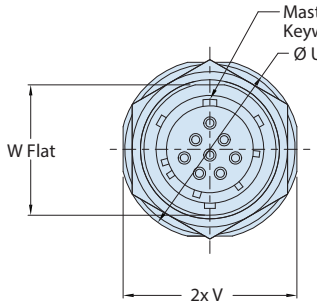

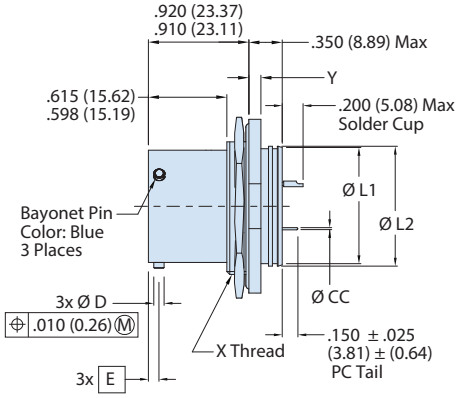

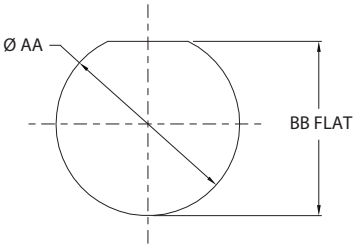

RECOMMENDED PANEL CUT OUT

07 - JAM NUT MOUNT RECEPTACLE (MS27470 REF)

CONNECTOR AND PANEL-MOUNT DIMENSIONS

Shell Size Code	Shell Size	ØU	V	W Flat	X Thread	Y	ØAA	BB Flat
A	9	1.204 (30.58) 1.172 (29.77)	1.078 (27.38) 1.046 (26.57)	0.655 (16.64) 0.645 (16.38)	.6875-24 UNEF-2A	.120 (3.05) .099 (2.51)	0.703 (17.86) 0.693 (17.60)	0.661 (16.79) 0.654 (16.61)
B	11	1.391 (35.33) 1.359 (34.52)	1.266 (32.16) 1.234 (31.34)	.755 (19.18) .745 (18.92)	.8125-20 UNEF-2A		.835 (21.21) .825 (20.96)	.771 (19.58) .761 (19.33)
C	13	1.516 (38.51) 1.484 (37.69)	1.391 (35.33) 1.359 (34.52)	0.942 (23.93) 0.932 (23.67)	1.000-20 UNEF-2A		1.020 (25.91) 1.010 (25.65)	0.955 (24.26) 0.945 (24.00)
D	15	1.641 (41.68) 1.609 (40.87)	1.516 (38.51) 1.484 (37.69)	1.066 (27.08) 1.056 (26.82)	1.1250-18 UNEF-2A		1.145 (29.08) 1.135 (28.83)	1.085 (27.56) 1.075 (27.31)
E	17	1.766 (44.86) 1.734 (44.04)	1.641 (41.68) 1.609 (40.87)	1.191 (30.25) 1.181 (30.00)	1.2500-18 UNEF-2A		1.270 (32.26) 1.260 (32.00)	1.210 (30.73) 1.200 (30.48)
F	19	1.954 (49.63) 1.922 (48.82)	1.828 (46.43) 1.796 (45.62)	1.316 (33.43) 1.306 (33.17)	1.3750-18 UNEF-2A		1.395 (35.43) 1.385 (35.18)	1.335 (33.91) 1.325 (33.66)
G	21	2.078 (52.78) 2.046 (51.97)	1.954 (49.63) 1.922 (48.82)	1.441 (36.60) 1.431 (36.35)	1.5000-18 UNEF-2A	.151 (3.84) .130 (3.30)	1.520 (38.61) 1.510 (38.35)	1.460 (37.08) 1.450 (36.83)
H	23	2.204 (55.98) 2.172 (55.17)	2.078 (52.78) 2.046 (51.97)	1.566 (39.78) 1.556 (39.52)	1.6250-18 UNEF-2A		1.645 (41.78) 1.635 (41.53)	1.585 (40.26) 1.575 (40.01)
J	25	2.328 (59.13) 2.296 (58.32)	2.204 (55.98) 2.172 (55.17)	1.691 (42.95) 1.681 (42.70)	1.7500-18 UNEF-2A		1.770 (44.96) 1.760 (44.70)	1.710 (43.43) 1.700 (43.18)

© 2022 Glenair, Inc • 1211 Air Way, Glendale, CA 91201 • 818-247-6000 • www.glenair.com • U.S. CAGE code 06324 •
SuperNine MIL-DTL-38999 Series I Type · Dimensions in Inches (millimeters) are subject to change without notice.

MIL-DTL-38999 Series I Type
Quick selection guide

QUICK SELECTION GUIDE		
Part number	**Description**	**Page**
240-381W	Filter connector wall-mount receptacle	D-2
240-381R	Connector wall-mount receptacle with crimp-removable contacts	D-4
240-381J	Connector jam-nut receptacle	D-6
240-381S	Jam-nut receptacle with crimp-removable contacts	D-8
240-381A	Connector adapter	D-10

240-381W

240-381R

240-381J

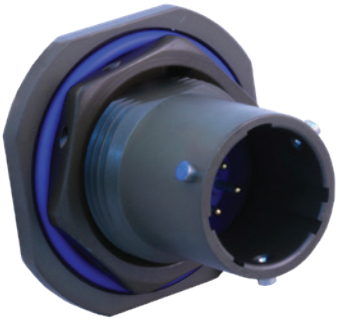

240-381S

240-381A

MIL-DTL-38999 Series I Type
240-381W Filter connector wall-mount receptacle

CONNECTOR FEATURES

- Bayonet coupling for rapid mating
- Scoop proof technology
- MIL-STD-1560 insert arrangements
- Quick turn, positive lock, full mate indicator
- *Numerous Contact/Wire/Braid terminations options*
- 500 cycles per D38999
- Enhanced finishes like tin zinc are RoHS compliant and cadmium compatible
- Available in wall-mount, box mount, clinch-nut, helicoil receptacles
- *Filtered Savcons provide immediate solutions and protect mating/unmating wear*
- Stainless steel bayonets utilized
- Max operating temperature is 125°C

POWER SPECIFICATIONS

- EMI Circular Filters designed to meet requirements of MIL-STD-2120 and MIL-DTL-38999, Series I
- Dielectric Withstanding Voltage: 500VDC; Standard Operating Voltage 200VDC (Filter Class X,Y and Z are 250VDC)
- Insulation Resistance: 5,000 Megohms at 200VDC for Class A,B,C,D,E,F,G,J / 1,000 Megohms at 83VDC for Class X,Y,Z

HOW TO ORDER

Sample Part Number	240-381	W	ME	15-35	P	S	P	A	C	N
Filter Connector	MIL-DTL-38999 Series I Type									
Shell Style	**W** = Wall-mount									
Connector Class	See Table I									
Insert Arrangement	IAW MIL-STD-1560. (See pages B-4 – B-5)									
Contact Gender	**P** = Pin **S** = Socket									
Termination	**S** = Solder Cup **P** = PC Tail									
Filter Type	**P** = Pi Circuit **C** = C Circuit (See Note 2)									
Capacitance	See Table II									
Flange Mounting Style	**H** = Round Holes **C** = Clinch-nuts (4-40 UNC) **M** = Metric Clinch-nuts (M3)									
Alternate Key Position	**A**, **B**, **C**, **D**, **N** = Normal (See page B-5)									

TABLE I: CONNECTOR CLASS

Sym	Class	Material	Finish Description
ME	Environmental	Aluminum	Electroless Nickel
MT	Environmental	Aluminum	Ni-PTFE *1000 Hour Grey*™ Nickel Fluorocarbon Polymer
NF	Environmental	Aluminum	Cadmium O.D. Over Electroless Nickel
ZL	Environmental	Stainless Steel	Electro-Deposited Nickel
ZN	Environmental	Aluminum	Zinc-Nickel, Olive Drab
ZR	Environmental	Aluminum	Zinc Nickel, Black - RoHS
H2*	Hermetic	Stainless Steel	Electro-Deposited Nickel

*Some dimensions do not apply. See drawing 240-381WH2

TABLE II: CAPACITOR ARRAY CODE CAPACITANCE RANGE

Class	Pi - Circuit (pF)	C - Circuit (pF)
X*	160,000 - 240,000	80,000 - 120,000
Y*	80,000 - 120,000	40,000 - 60,000
Z*	60,000 - 90,000	30,000 - 45,000
A	38,000 - 56,000	19,000 - 28,000
B	32,000 - 45,000	16,000 - 22,500
C	18,000 - 33,000	9,000 - 16,500
D	8,000 - 12,000	4,000 - 6,000
E	3,300 - 5,000	1,650 - 2,500
F	800 - 1,300	400 - 650
G	400 - 600	200 - 300
J	70-120	35-60

* Filter Classes X, Y and Z are 250 VDC.
All others are 500 VDC

TABLE IV: PC TAIL DIA

Contact Size	Ø U
22D	.021 (0.53) .018 (0.46)
20	.031 (0.79) .029 (0.74)
16	.042 (1.07) .038 (0.97)
12	.096 (2.44) .092 (2.34)

© 2025 Glenair, Inc • 1211 Air Way, Glendale, CA 91201 • 818-247-6000 • www.glenair.com • U.S. CAGE code 06324 •
SuperNine MIL-DTL-38999 Series I Type · Dimensions in Inches (millimeters) are subject to change without notice.

MIL-DTL-38999 Series I Type
240-381W Filter connector wall-mount receptacle

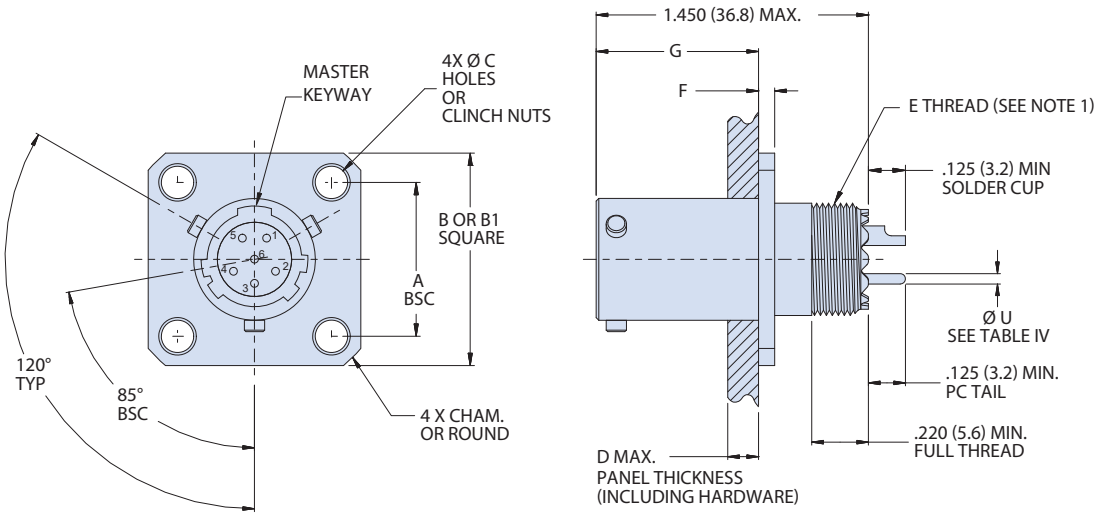

TABLE III: DIMENSIONS

Shell Size	A Bsc	Thru Hole Flange		Clinch-nut Flange	D Max	E Thread UNEF-2A	F +.015 (.38) -.000 (.00)	G +.000 (.00) -.005 (.13)
		B Sq. ±.020 (.51)	Ø C +.010 (.25) -.005 (.13)	B1 Sq. ±.020 (.51)				
9	.719 (18.3)	.938 (23.8)	.128 (3.3)	1.019 (25.9)	.234 (5.9)	.5625-24	.085 (2.2)	.820 (20.8)
11	.812 (20.6)	1.031 (26.2)	.128 (3.3)	1.112 (28.2)	.234 (5.9)	.6875-24	.085 (2.2)	.820 (20.8)
13	.906 (23.0)	1.125 (28.6)	.128 (3.3)	1.206 (30.6)	.234 (5.9)	.8125-20	.085 (2.2)	.820 (20.8)
15	.969 (24.6)	1.219 (31.0)	.128 (3.3)	1.269 (32.2)	.234 (5.9)	.9375-20	.085 (2.2)	.820 (20.8)
17	1.062 (27.0)	1.312 (33.3)	.128 (3.3)	1.362 (34.6)	.234 (5.9)	1.0625-18	.085 (2.2)	.820 (20.8)
19	1.156 (29.4)	1.438 (36.5)	.128 (3.3)	1.456 (37.0)	.234 (5.9)	1.0625-18	.085 (2.2)	.820 (20.8)
21	1.250 (31.8)	1.562 (39.7)	.128 (3.3)	1.562 (39.7)	.204 (5.2)	1.1875-18	.115 (2.9)	.790 (20.1)
23	1.375 (34.9)	1.688 (42.9)	.147 (3.7)	1.719 (43.7)	.204 (5.2)	1.3125-18	.115 (2.9)	.790 (20.1)
25	1.500 (38.1)	1.812 (46.0)	.147 (3.7)	1.844 (46.8)	.193 (4.9)	1.4375-18	.115 (2.9)	.790 (20.1)

NOTES

1. "E" accessory threads for shell size 9 thru 17 are one size larger than MIL-DTL-38999 Series I to accommodate filters
2. Other filter styles (C-L, L-C, Unbalanced Pi, Multi-Stage, Multi-Value) are available, please consult the factory.

MIL-DTL-38999 Series I Type
240-381R Connector wall-mount receptacle with crimp-removable contacts

CONNECTOR FEATURES

- Bayonet coupling for rapid mating
- Scoop proof technology
- MIL-STD-1560 insert arrangements
- Quick turn, positive lock, full mate indicator
- *Numerous Contact/Wire/Braid terminations Options*
- 500 cycles per D38999
- Enhanced finishes like tin zinc are RoHS compliant and cadmium compatible
- Available in wall-mount, box mount, clinch-nut, helicoil receptacles
- *Filtered Savcons provide immediate solutions and protect mating/unmating wear*
- Stainless steel bayonets utilized
- Max operating temperature is 125°C

POWER SPECIFICATIONS

- EMI Circular Filters designed to meet requirements of MIL-STD-2120 and MIL-DTL-38999, Series I
- Dielectric Withstanding Voltage: 500VDC; Standard Operating Voltage 200VDC (Filter Class X,Y and Z are 250VDC)
- Insulation Resistance: 5,000 Megohms at 200VDC for Class A,B,C,D,E,F,G,J / 1,000 Megohms at 83VDC for Class X,Y,Z

HOW TO ORDER

Sample Part Number	240-381	R	ME	15-35	P	C	P	A	C	N
Filter Connector	MIL-DTL-38999 Series I Type									
Shell Style	**R** = Wall-mount Receptacle with Crimp Contacts									
Connector Class	See Table I									
Insert Arrangement	IAW MIL-STD-1560. (See pages B-4 – B-5)									
Contact Gender	**P** = Pin **S** = Socket									
Termination	**C** = Crimp									
Filter Type	**P** = Pi Circuit **C** = C Circuit (See Note 3)									
Capacitance	See Table II									
Flange Mounting Style	**H** = Round Holes **C** = Clinch-nuts (4-40 UNC) **M** = Metric Clinch-nuts (M3)									
Alternate Key Position	**A**, **B**, **C**, **D**, **N** = Normal (See page B-5)									

TABLE I: CONNECTOR CLASS

Sym	Class	Material	Finish Description
ME	Environmental	Aluminum	Electroless Nickel
MT	Environmental	Aluminum	Ni-PTFE *1000 Hour Grey*™ Nickel Fluorocarbon Polymer
NF	Environmental	Aluminum	Cadmium O.D. Over Electroless Nickel
ZL	Environmental	Stainless Steel	Electro-Deposited Nickel
ZN	Environmental	Aluminum	Zinc-Nickel, Olive Drab
ZR	Environmental	Aluminum	Zinc Nickel, Black - RoHS
H2*	Hermetic	Stainless Steel	Electro-Deposited Nickel

*Some dimensions do not apply. See drawing 240-381RH2

TABLE II: CAPACITOR ARRAY CODE CAPACITANCE RANGE

Class	Pi - Circuit (pF)	C - Circuit (pF)
X*	160,000 - 240,000	80,000 - 120,000
Y*	80,000 - 120,000	40,000 - 60,000
Z*	60,000 - 90,000	30,000 - 45,000
A	38,000 - 56,000	19,000 - 28,000
B	32,000 - 45,000	16,000 - 22,500
C	18,000 - 33,000	9,000 - 16,500
D	8,000 - 12,000	4,000 - 6,000
E	3,300 - 5,000	1,650 - 2,500
F	800 - 1,300	400 - 650
G	400 - 600	200 - 300
J	70-120	35-60

* Filter Classes X, Y and Z are 250 VDC.
All others are 500 VDC

© 2025 Glenair, Inc • 1211 Air Way, Glendale, CA 91201 • 818-247-6000 • www.glenair.com • U.S. CAGE code 06324 •
SuperNine MIL-DTL-38999 Series I Type · Dimensions in Inches (millimeters) are subject to change without notice.

MIL-DTL-38999 Series I Type
240-381R Connector wall-mount receptacle with crimp-removable contacts

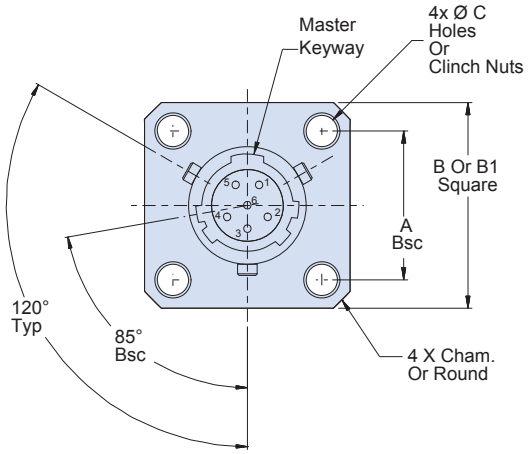

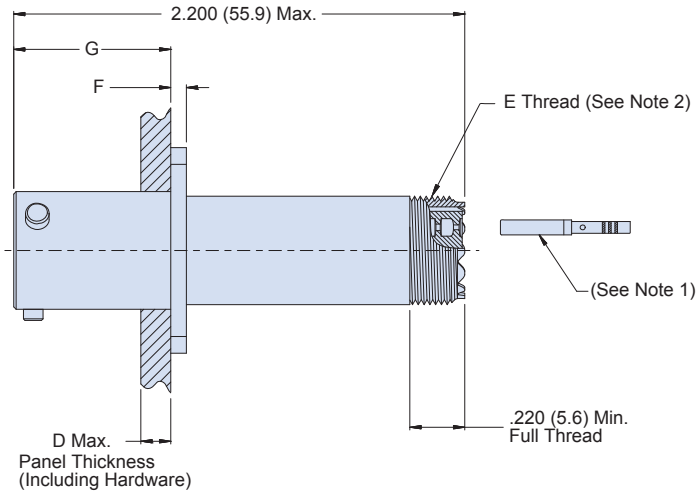

TABLE III: DIMENSIONS

Shell Size	A Bsc	Thru Hole Flange		Clinch-nut Flange	D Max	E Thread UNEF-2A	F +.015 (.38) -.000 (.00)	G +.000 (.00) -.005 (.13)
		B Sq. ±.020 (.51)	Ø C +.010 (.25) -.005 (.13)	B1 Sq. ±.020 (.51)				
9	.719 (18.3)	.938 (23.8)	.128 (3.3)	1.019 (25.9)	.234 (5.9)	.5625-24	.085 (2.2)	.820 (20.8)
11	.812 (20.6)	1.031 (26.2)	.128 (3.3)	1.112 (28.2)	.234 (5.9)	.6875-24	.085 (2.2)	.820 (20.8)
13	.906 (23.0)	1.125 (28.6)	.128 (3.3)	1.206 (30.6)	.234 (5.9)	.8125-20	.085 (2.2)	.820 (20.8)
15	.969 (24.6)	1.219 (31.0)	.128 (3.3)	1.269 (32.2)	.234 (5.9)	.9375-20	.085 (2.2)	.820 (20.8)
17	1.062 (27.0)	1.312 (33.3)	.128 (3.3)	1.362 (34.6)	.234 (5.9)	1.0625-18	.085 (2.2)	.820 (20.8)
19	1.156 (29.4)	1.438 (36.5)	.128 (3.3)	1.456 (37.0)	.234 (5.9)	1.0625-18	.085 (2.2)	.820 (20.8)
21	1.250 (31.8)	1.562 (39.7)	.128 (3.3)	1.562 (39.7)	.204 (5.2)	1.1875-18	.115 (2.9)	.790 (20.1)
23	1.375 (34.9)	1.688 (42.9)	.147 (3.7)	1.719 (43.7)	.204 (5.2)	1.3125-18	.115 (2.9)	.790 (20.1)
25	1.500 (38.1)	1.812 (46.0)	.147 (3.7)	1.844 (46.8)	.193 (4.9)	1.4375-18	.115 (2.9)	.790 (20.1)

NOTES

1. Crimp-removable contacts to conform to MIL-C-39029/57-358, Size 16, MIL-C-39029/57-357 Size 20, and MIL-C-39029/57-354 Size 22D (Supplied loose).
2. "E" accessory threads for shell size 9 thru 17 are one size larger than MIL-DTL-38999 Series I to accommodate filters
3. Other filter styles (C-L, L-C, Unbalanced Pi, Multi-Stage, Multi-Value) are available, please consult the factory.

MIL-DTL-38999 Series I Type
240-381J Connector jam-nut receptacle

CONNECTOR FEATURES

- Bayonet coupling for rapid mating
- Scoop proof technology
- MIL-STD-1560 insert arrangements
- Quick turn, positive lock, full mate indicator
- *Numerous Contact/Wire/Braid terminations Options*
- 500 cycles per D38999
- Enhanced finishes like tin zinc are RoHS compliant and cadmium compatible
- Available in wall-mount, box mount, clinch-nut, helicoil receptacles
- *Filtered Savcons provide immediate solutions and protect mating/unmating wear*
- Stainless steel bayonets utilized
- Max operating temperature is 125°C

POWER SPECIFICATIONS

- EMI Circular Filters designed to meet requirements of MIL-STD-2120 and MIL-DTL-38999, Series I
- Dielectric Withstanding Voltage: 500VDC; Standard Operating Voltage 200VDC (Filter Class X,Y and Z are 250VDC)
- Insulation Resistance: 5,000 Megohms at 200VDC for Class A,B,C,D,E,F,G,J / 1,000 Megohms at 83VDC for Class X,Y,Z

HOW TO ORDER

Sample Part Number	240-381	J	ME	15-35	P	S	P	A	N	N
Filter Connector	MIL-DTL-38999 Series I Type									
Shell Style	**J** = Jam-nut									
Connector Class	See Table I									
Insert Arrangement	IAW MIL-STD-1560. (See pages B-4 – B-5)									
Contact Gender	**P** = Pin **S** = Socket									
Termination	**S** = Solder Cup **P** = PC Tail									
Filter Type	**P** = Pi Circuit **C** = C Circuit (See Note 2)									
Capacitance	See Table II									
Flange Mounting Style	**N** = Not Applicable									
Alternate Key Position	**A**, **B**, **C**, **D**, **N** = Normal (See page B-5)									

TABLE I: CONNECTOR CLASS

Sym	Class	Material	Finish Description
ME	Environmental	Aluminum	Electroless Nickel
MT	Environmental	Aluminum	Ni-PTFE *1000 Hour Grey*™ Nickel Fluorocarbon Polymer
NF	Environmental	Aluminum	Cadmium O.D. Over Electroless Nickel
ZL	Environmental	Stainless Steel	Electro-Deposited Nickel
ZN	Environmental	Aluminum	Zinc-Nickel, Olive Drab
ZR	Environmental	Aluminum	Zinc Nickel, Black - RoHS
H2*	Hermetic	Stainless Steel	Electro-Deposited Nickel

*Some dimensions do not apply. See drawing 240-381JH2

TABLE II: CAPACITOR ARRAY CODE CAPACITANCE RANGE

Class	Pi - Circuit (pF)	C - Circuit (pF)
X*	160,000 - 240,000	80,000 - 120,000
Y*	80,000 - 120,000	40,000 - 60,000
Z*	60,000 - 90,000	30,000 - 45,000
A	38,000 - 56,000	19,000 - 28,000
B	32,000 - 45,000	16,000 - 22,500
C	18,000 - 33,000	9,000 - 16,500
D	8,000 - 12,000	4,000 - 6,000
E	3,300 - 5,000	1,650 - 2,500
F	800 - 1,300	400 - 650
G	400 - 600	200 - 300
J	70-120	35-60

* Filter Classes X, Y and Z are 250 VDC.
All others are 500 VDC

TABLE IV: PC TAIL DIA

Contact Size	Ø U
22D	.021 (0.53) .018 (0.46)
20	.031 (0.79) .029 (0.74)
16	.042 (1.07) .038 (0.97)
12	.096 (2.44) .092 (2.34)

© 2025 Glenair, Inc • 1211 Air Way, Glendale, CA 91201 • 818-247-6000 • www.glenair.com • U.S. CAGE code 06324 •
SuperNine MIL-DTL-38999 Series I Type · Dimensions in Inches (millimeters) are subject to change without notice.

MIL-DTL-38999 Series I Type
240-381J Connector Jam-nut Receptacle

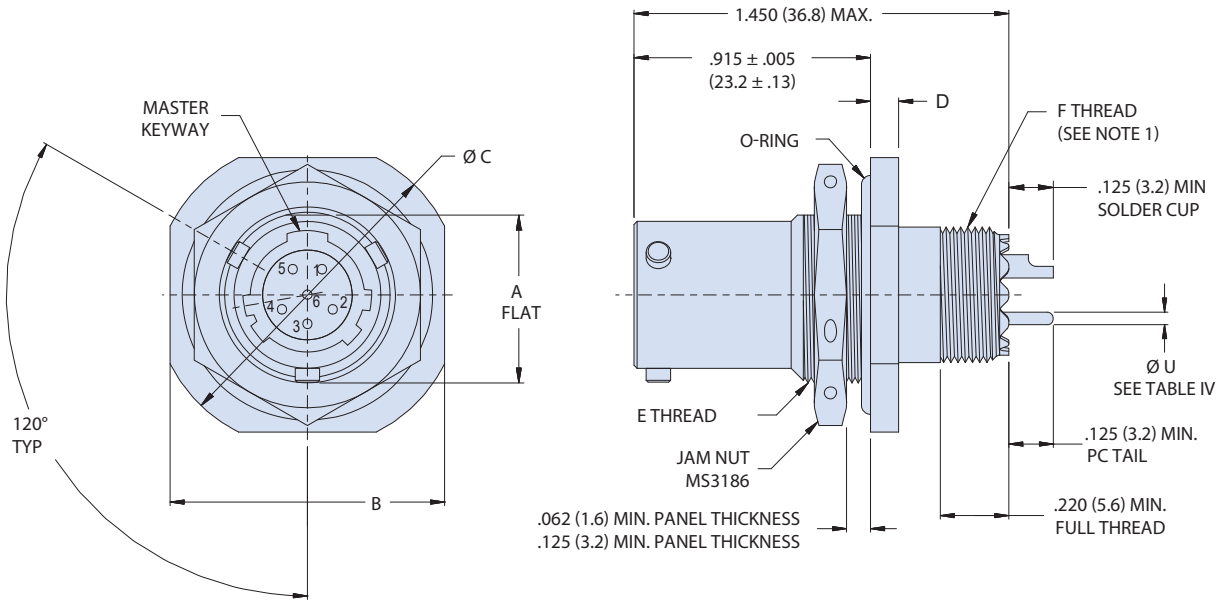

TABLE III: DIMENSIONS

Shell Size	A +.000 (.00) -.010 (.25)	B ±.016 (.40)	Ø C ±.016 (.40)	D +.011 (.28) -.010 (.25)	E Thread UNEF-2A	F Thread UNEF-2A
9	.655 (16.6)	1.062 (27.0)	1.188 (30.2)	.109 (2.8)	.6875-24	.5625-24
11	.755 (19.2)	1.250 (31.8)	1.375 (34.9)	.109 (2.8)	.8125-20	.6875-24
13	.942 (23.9)	1.375 (34.9)	1.500 (38.1)	.109 (2.8)	1.0000-20	.8125-20
15	1.066 (27.1)	1.500 (38.1)	1.625 (41.3)	.109 (2.8)	1.1250-18	.9375-20
17	1.191 (30.3)	1.625 (41.3)	1.750 (44.5)	.109 (2.8)	1.2500-18	1.0625-18
19	1.316 (33.4)	1.812 (46.0)	1.938 (49.2)	.140 (3.6)	1.3750-18	1.0625-18
21	1.441 (36.6)	1.938 (49.2)	2.062 (52.4)	.140 (3.6)	1.5000-18	1.1875-18
23	1.566 (39.8)	2.062 (52.4)	2.188 (55.6)	.140 (3.6)	1.6250-18	1.3125-18
25	1.691 (43.0)	2.188 (55.6)	2.312 (58.7)	.140 (3.6)	1.7500-18	1.4375-18

NOTES

1. "F" accessory threads for shell size 9 thru 17 are one size larger than MIL-DTL-38999 Series I to accommodate filters
2. Other filter styles (C-L, L-C, Unbalanced Pi, Multi-Stage, Multi-Value) are available, please consult the factory.

MIL-DTL-38999 Series I Type
240-381S Connector jam-nut receptacle with crimp-removable contacts

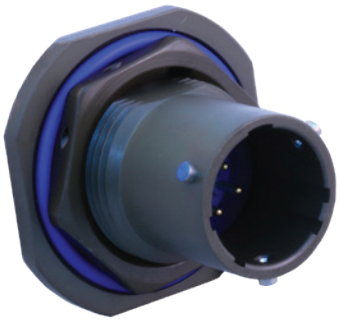

CONNECTOR FEATURES

- Bayonet coupling for rapid mating
- Scoop proof technology
- MIL-STD-1560 insert arrangements
- Quick turn, positive lock, full mate indicator
- *Numerous Contact/Wire/Braid terminations Options*
- 500 cycles per D38999
- Enhanced finishes like tin zinc are RoHS compliant and cadmium compatible
- Available in wall-mount, box mount, clinch-nut, helicoil receptacles
- *Filtered Savcons provide immediate solutions and protect mating/unmating wear*
- Stainless steel bayonets utilized
- Max operating temperature is 125°C

POWER SPECIFICATIONS

- EMI Circular Filters designed to meet requirements of MIL-STD-2120 and MIL-DTL-38999, Series I
- Dielectric Withstanding Voltage: 500VDC; Standard Operating Voltage 200VDC (Filter Class X,Y and Z are 250VDC)
- Insulation Resistance: 5,000 Megohms at 200VDC for Class A,B,C,D,E,F,G,J / 1,000 Megohms at 83VDC for Class X,Y,Z

HOW TO ORDER

Sample Part Number	240-381	S	ME	15-35	P	C	P	A	N	N
Filter Connector	MIL-DTL-38999 Series I Type									
Shell Style	**S** = Jam-nut Receptacle with Crimp Contacts									
Connector Class	See Table I									
Insert Arrangement	IAW MIL-STD-1560. (See pages B-4 – B-5)									
Contact Gender	**P** = Pin **S** = Socket									
Termination	**C** = Crimp									
Filter Type	**P** = Pi Circuit **C** = C Circuit (See Note 3)									
Capacitance	See Table II									
Flange Mounting Style	**N** = Not Applicable									
Alternate Key Position	**A**, **B**, **C**, **D**, **N** = Normal (See page B-5)									

TABLE I: CONNECTOR CLASS

Sym	Class	Material	Finish Description
ME	Environmental	Aluminum	Electroless Nickel
MT	Environmental	Aluminum	Ni-PTFE *1000 Hour Grey*™ Nickel Fluorocarbon Polymer
NF	Environmental	Aluminum	Cadmium O.D. Over Electroless Nickel
ZL	Environmental	Stainless Steel	Electro-Deposited Nickel
ZN	Environmental	Aluminum	Zinc-Nickel, Olive Drab
ZR	Environmental	Aluminum	Zinc Nickel, Black - RoHS
H2*	Hermetic	Stainless Steel	Electro-Deposited Nickel

*Some dimensions do not apply. See drawing 240-381SH2

TABLE II: CAPACITOR ARRAY CODE CAPACITANCE RANGE

Class	Pi - Circuit (pF)	C - Circuit (pF)
X*	160,000 - 240,000	80,000 - 120,000
Y*	80,000 - 120,000	40,000 - 60,000
Z*	60,000 - 90,000	30,000 - 45,000
A	38,000 - 56,000	19,000 - 28,000
B	32,000 - 45,000	16,000 - 22,500
C	18,000 - 33,000	9,000 - 16,500
D	8,000 - 12,000	4,000 - 6,000
E	3,300 - 5,000	1,650 - 2,500
F	800 - 1,300	400 - 650
G	400 - 600	200 - 300
J	70-120	35-60

* Filter Classes X, Y and Z are 250 VDC.
All others are 500 VDC

© 2025 Glenair, Inc • 1211 Air Way, Glendale, CA 91201 • 818-247-6000 • www.glenair.com • U.S. CAGE code 06324 •
SuperNine MIL-DTL-38999 Series I Type · Dimensions in Inches (millimeters) are subject to change without notice.

MIL-DTL-38999 Series I Type
240-381S Connector jam-nut receptacle with crimp-removable contacts

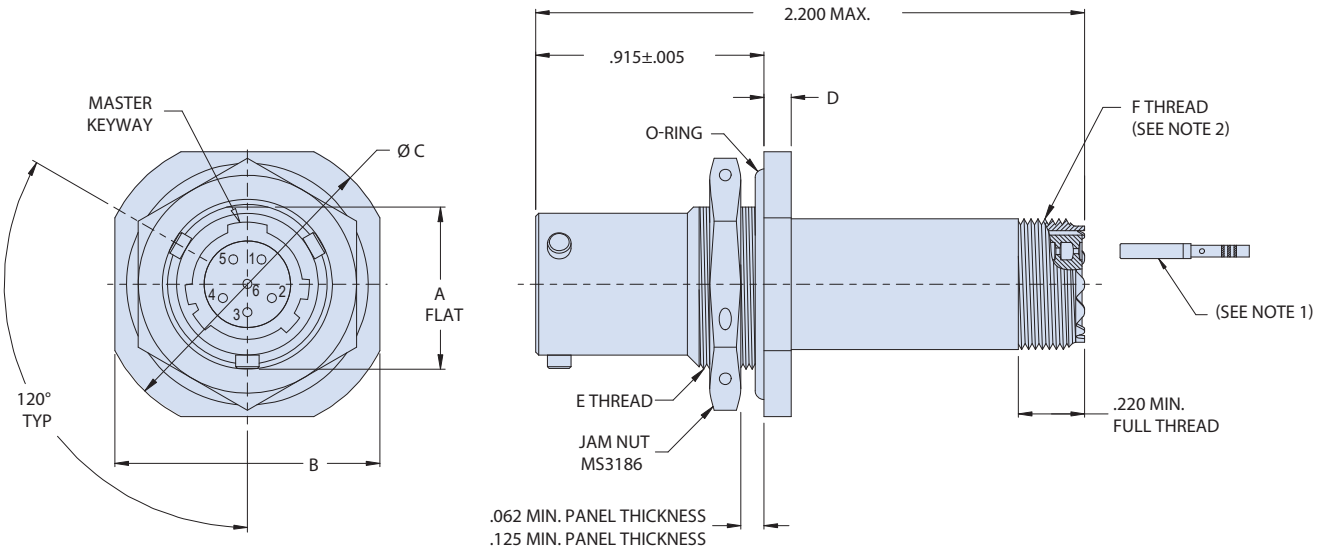

TABLE III: DIMENSIONS						
Shell Size	A +.000 (.00) -.010 (.25)	B ±.016 (.40)	Ø C ±.016 (.40)	D +.011 (.28) -.010 (.25)	E Thread UNEF-2A	F Thread UNEF-2A
9	.655 (16.6)	1.062 (27.0)	1.188 (30.2)	.109 (2.8)	.6875-24	.5625-24
11	.755 (19.2)	1.250 (31.8)	1.375 (34.9)	.109 (2.8)	.8125-20	.6875-24
13	.942 (23.9)	1.375 (34.9)	1.500 (38.1)	.109 (2.8)	1.0000-20	.8125-20
15	1.066 (27.1)	1.500 (38.1)	1.625 (41.3)	.109 (2.8)	1.1250-18	.9375-20
17	1.191 (30.3)	1.625 (41.3)	1.750 (44.5)	.109 (2.8)	1.2500-18	1.0625-18
19	1.316 (33.4)	1.812 (46.0)	1.938 (49.2)	.140 (3.6)	1.3750-18	1.0625-18
21	1.441 (36.6)	1.938 (49.2)	2.062 (52.4)	.140 (3.6)	1.5000-18	1.1875-18
23	1.566 (39.8)	2.062 (52.4)	2.188 (55.6)	.140 (3.6)	1.6250-18	1.3125-18
25	1.691 (43.0)	2.188 (55.6)	2.312 (58.7)	.140 (3.6)	1.7500-18	1.4375-18

NOTES

1. Crimp-removable contacts to conform to MIL-C-39029/57-358, Size 16, MIL-C-39029/57-357 Size 20, and MIL-C-39029/57-354 Size 22D (Supplied loose).
2. "E" accessory threads for shell size 9 thru 17 are one size larger than MIL-DTL-38999 Series I to accommodate filters
3. Other filter styles (C-L, L-C, Unbalanced Pi, Multi-Stage, Multi-Value) are available, please consult the factory.

MIL-DTL-38999 Series I Type
240-381A Connector adapter

CONNECTOR FEATURES

- Bayonet coupling for rapid mating
- Scoop proof technology
- MIL-STD-1560 insert arrangements
- Quick turn, positive lock, full mate indicator
- *Numerous Contact/Wire/Braid terminations Options*
- 500 cycles per D38999
- Enhanced finishes like tin zinc are RoHS compliant and cadmium compatible
- Available in wall-mount, box mount, clinch-nut, helicoil receptacles
- *Filtered Savcons provide immediate solutions and protect mating/unmating wear*
- Stainless steel bayonets utilized
- Max operating temperature is 125°C

POWER SPECIFICATIONS

- EMI Circular Filters designed to meet requirements of MIL-STD-2120 and MIL-DTL-38999, Series I
- Dielectric Withstanding Voltage: 500VDC; Standard Operating Voltage 200VDC (Filter Class X,Y and Z are 250VDC)
- Insulation Resistance: 5,000 Megohms at 200VDC for Class A,B,C,D,E,F,G,J / 1,000 Megohms at 83VDC for Class X,Y,Z

HOW TO ORDER

Sample Part Number	240-381	A	ME	15-35	PS	P	A	N	U
Filter Connector	MIL-DTL-38999 Series I Type								
Shell Style	**A** = Connector Adapter								
Connector Class	See Table I								
Insert Arrangement	IAW MIL-STD-1560. (See pages B-4 – B-5)								
Contact Gender	**PS** = Pins, Plug Side **SP** = Sockets, Plug Side (See Note 2)								
Filter Type	**P** = Pi Circuit **C** = C Circuit (See Note 1)								
Capacitance	See Table II								
Flange Mounting Style	**N** = Not Applicable								
Alternate Key Position	**A**, **B**, **C**, **D**, **N** = Normal, **U** = Universal (See page B-5) (See Note 3)								

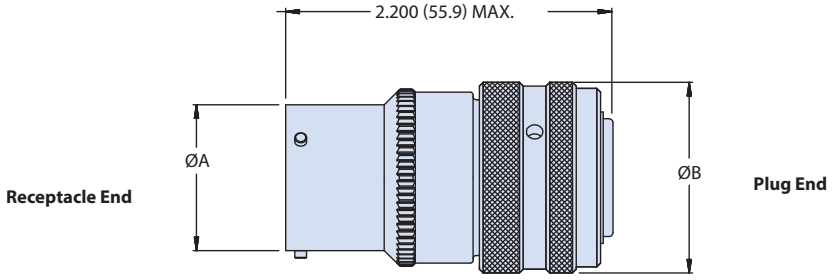

* Please consult the factory for Pin/Pin and/or Socket/Socket contact arrangements.

TABLE I: CONNECTOR CLASS

Sym	Class	Material	Finish Description
ME	Environmental	Aluminum	Electroless Nickel
MT	Environmental	Aluminum	Ni-PTFE *1000 Hour Grey*™ Nickel Fluorocarbon Polymer
NF	Environmental	Aluminum	Cadmium O.D. Over Electroless Nickel
ZL	Environmental	Stainless Steel	Electro-Deposited Nickel
ZN	Environmental	Aluminum	Zinc-Nickel, Olive Drab
ZR	Environmental	Aluminum	Zinc Nickel, Black - RoHS

© 2025 Glenair, Inc • 1211 Air Way, Glendale, CA 91201 • 818-247-6000 • www.glenair.com • U.S. CAGE code 06324 •
SuperNine MIL-DTL-38999 Series I Type · Dimensions in Inches (millimeters) are subject to change without notice.

MIL-DTL-38999 Series I Type 240-381A Connector adapter

TABLE II: CAPACITOR ARRAY CODE CAPACITANCE RANGE		
Class	Pi - Circuit (pF)	C - Circuit (pF)
X*	160,000 - 240,000	80,000 - 120,000
Y*	80,000 - 120,000	40,000 - 60,000
Z*	60,000 - 90,000	30,000 - 45,000
A	38,000 - 56,000	19,000 - 28,000
B	32,000 - 45,000	16,000 - 22,500
C	18,000 - 33,000	9,000 - 16,500
D	8,000 - 12,000	4,000 - 6,000
E	3,300 - 5,000	1,650 - 2,500
F	800 - 1,300	400 - 650
G	400 - 600	200 - 300
J	70-120	35-60

* Filter Classes X, Y and Z are 250 VDC.
All others are 500 VDC

TABLE III: DIMENSIONS		
Shell Size	Ø A Max	Ø B Max
9	.573 (14.6)	.910 (23.1)
11	.701 (17.8)	1.035 (26.3)
13	.851 (21.6)	1.210 (30.7)
15	.976 (24.8)	1.330 (33.8)
17	1.101 (28.0)	1.455 (37.0)
19	1.208 (30.7)	1.570 (39.9)
21	1.333 (33.9)	1.695 (43.1)
23	1.458 (37.0)	1.800 (45.7)
25	1.583 (40.2)	1.925 (48.9)

NOTES

1. Other filter styles (C-L, L-C, Unbalanced Pi, Multi-Stage, Multi-Value) are available, please consult the factory.
2. Please consult the factory for pin/pin and/or socket/socket contact arrangements.
3. Do not mate universal key position with another universal.

MIL-DTL-38999 Series I Type
Quick selection guide

QUICK SELECTION GUIDE		
Part Number	**Description**	**Page**
310F*045	Shrink boot adapter, composite	E-2
310F*048	Shrink boot adapter, pre-installed boot, composite	E-3
370F*001	Backshell, environmental, spin coupling	E-4
440F*143	Composite, shrink boot, ultra low profile 90°	E-6
447F*326	Composite, shrink boot, micro band	E-7
870F001	Swing-Arm® saddle clamp	E-8
870F002	Swing-Arm® saddle clamp, braid sock, composite	E-10
870F005	Swing-Arm® saddle clamp, EMI banding adapter, aluminum/SST	E-12
871F004	Swing-Arm® clamp, EMI banding adapter, composite	E-14
667-467	Proseal™ spring-action receptacle cover	E-16
660-012	Plug protective cover	E-17
661-002	Receptacle cover, spring-loaded EMI	E-18
M85049	Nut plate	E-19
	Composite Swing-Arm® strain relief assembly procedure	E-20
470-013	Starshield™ EMI/RFI shield termination backshell	E-22
770-003S	Lipped, straight shrink boots, without eyelet	E-24
770-001S	Lipped, straight shrink boot, with eyelet	E-26
770-004S	Lipped, short straight shrink boot, without eyelet	E-28
770-005/-006	Autoshrink D cold-action boots, standard / short	E-30
770-015	Autoshrink D cold-action boot, 90°, lipless, no eyelet	E-32
600-117	Jam nut wrench for connectors	E-33

310F*045

310F*048

870F001

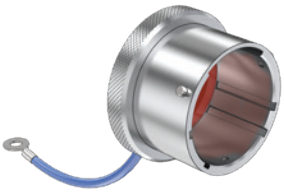
660-012

870F002

870F005

871F004

667-467

© 2025 Glenair, Inc • 1211 Air Way, Glendale, CA 91201 • 818-247-6000 • www.glenair.com • U.S. CAGE code 06324 •
SuperNine MIL-DTL-38999 Series I Type · Dimensions in Inches (millimeters) are subject to change without notice.

MIL-DTL-38999 Series I Type
310F*045 Shrink boot adapter, composite

FEATURES

- Corrosion-proof composite shrink boot adapter for MIL-DTL-38999 Series I and II connectors.
- Adapter has groove for lipped shrink boot.
- Anti-decoupling mechanism provides audible detented coupling and prevents backoff under high vibration.
- Glass-filled high-performance thermoplastic, silicone O-ring.
- Supplied as adapter only or as kit with shrink boot.
- Optional heatshrink boot provides cable strain relief and environmental protection. Type 1 high-performance semi-rigid elastomer resists fuels and oils and withstands temperature extremes.

HOW TO ORDER					
Sample Part Number	**310FS045**	**XB**	**16**	**D**	**T**
Basic Part Number	**310FS045 S** = Straight **310FT045 H** = 45° **310FW045 J** = 90°				
Connector Material and Finish	**XB** = No Plating (Black Color) **XM** = Electroless Nickel **XMT** = Nickel-PTFE **XW** = Olive Drab Cadmium **XZR** = Black Zinc-Nickel				
Shell Size	**09**, **11**, **13**, **15**, **17**, **19**, **21**, **23**, **25**				
Drain Holes	Omit if not required; O-ring not supplied with drain hole option **D** = Drain Holes				
Shrink Boot	Omit if not required **T** = Shrink Boot included				

Profile S Straight

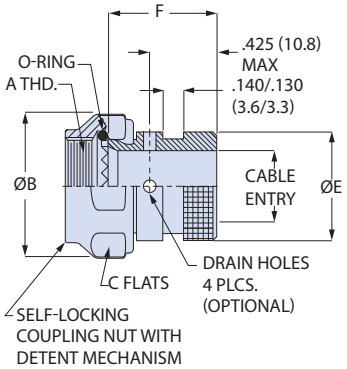

Profile H 45°

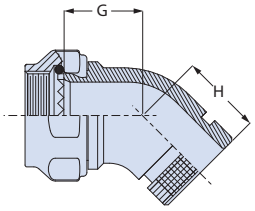

Profile J 90°

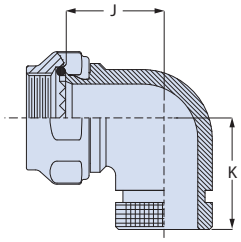

Shell Size	A Thread Unef-2b	ø B Max	C Hex Flats	ø E Max	F Max	G Max	H ± .06(1.5)	J Max	K ± .06(1.5)	Cable Entry Min	Shrink Boot P/N
8/9	0.4375-28	.86 (21.8)	.750 (19.1)	.533 (13.5)	.940 (23.9)	.78 (19.8)	1.049 (26.6)	.74 (18.8)	1.159 (29.4)	.250 (6.4)	770-003S102
10/11	0.5625-24	.98 (24.9)	.875 (22.2)	.605 (15.4)	.940 (23.9)	.81 (20.6)	1.075 (27.4)	.80 (20.3)	1.221 (31.0)	.355 (9.0)	770-001S103
12/13	0.6875-24	1.16 (29.5)	1.000 (25.4)	.774 (19.7)	.940 (23.9)	.81 (20.6)	1.100 (27.9)	.86 (21.8)	1.283 (32.6)	.491 (12.5)	770-001S103
14/15	0.8125-20	1.28 (32.5)	1.125 (28.6)	.838 (21.3)	.940 (23.9)	.82 (20.8)	1.126 (28.6)	.93 (23.6)	1.346 (34.2)	.565 (14.4)	770-001S103
16/17	0.9375-20	1.41 (35.8)	1.250 (31.8)	.963 (24.5)	.940 (23.9)	.84 (21.3)	1.146 (29.1)	.99 (25.1)	1.409 (35.8)	.690 (17.5)	770-001S104
18/19	1.0625-18	1.52 (38.6)	1.375 (34.9)	1.042 (26.5)	.940 (23.9)	.85 (21.6)	1.165 (29.6)	1.05 (26.7)	1.471 (37.4)	.769 (19.5)	770-001S104
20/21	1.1875-18	1.64 (41.7)	1.500 (38.1)	1.217 (30.9)	.940 (23.9)	.88 (22.4)	1.189 (30.2)	1.12 (28.4)	1.533 (38.9)	.894 (22.7)	770-001S106
22/23	1.3125-18	1.77 (45.0)	1.625 (41.3)	1.355 (34.4)	.940 (23.9)	.92 (23.4)	1.230 (31.2)	1.18 (30.0)	1.596 (40.5)	1.019 (25.9)	770-001S107
24/25	1.4375-18	1.89 (48.0)	1.750 (44.5)	1.443 (36.7)	.940 (23.9)	.97 (24.6)	1.256 (31.9)	1.24 (31.5)	1.659 (42.1)	1.134 (28.8)	770-001S107

© 2025 Glenair, Inc • 1211 Air Way, Glendale, CA 91201 • 818-247-6000 • www.glenair.com • U.S. CAGE code 06324 •

MIL-DTL-38999 Series I Type
310F*048 Shrink boot adapter, pre-installed boot, composite

HOW TO ORDER				
Sample Part Number	**310FS045**	**XB**	**22**	**-1**
Basic Part Number	**310FS048**			
Finish	**XB** = No Plating (Black Color)			
Shell Size	**09**, **11**, **13**, **15**, **17**, **19**, **21**, **23**, **25**			
Boot	**-1** = Type 1 High Performance Semi-Rigid Elastomer **-2** = Type 2 Zero Halogen Semi-Rigid Polyolefin **-3** = Type 3 Flexible Polyolefin			

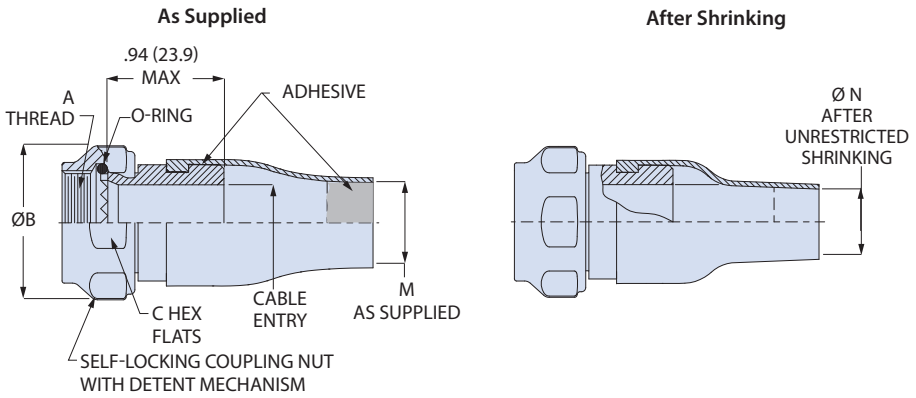

SHRINK BOOT MATERIAL SELECTION GUIDE			
	Type 1 High Performance	**Type 2 Zero Halogen**	**Type 3 General Purpose**
Material	Semi-Rigid Elastomer	Semi-Rigid Polyolefin	Flexible Polyolefin
Resistance to Fuels, Oils	Excellent	Very Good	Good
Adhesive Type	W1 Hot Melt	W1 Hot Melt	W2 Hot Melt
Continuous Operating Temp.	-55 to +125 °C	-55 to +125 °C	-55 to +70 °C
Low Smoke/Zero Halogen	No	Yes	No
SAE Material Type	AS5258 Type H	AS5258 Type G	AS81765/1 Type 1

FEATURES

- Environmental, self-locking, corrosion-proof glass-filled composite "Piggyback" shrink boot adapter fits MIL-DTL-38999 Series I and II connectors.
- Piggyback boot adapters reduce boot installation time by 50% and eliminate misalignment problems.
- For use with jacketed, unshielded cable.
- Anti-decoupling mechanism provides audible detented coupling and prevents backoff under high vibration.
- Silicone O-ring.
- Three adhesive-lined boot materials: Type 1 high-performance elastomer, Type 2 zero halogen, or Type 3 flexible polyolefin.

Shell Size	A Thread UNEF-2B	ø B Max	C Hex Flats	ø M Min	ø N Max	Min Cable Entry
8/9	0.4375-28	.86 (21.8)	.750 (19.1)	.250 (6.4)	.197 (5.0)	.250 (6.4)
10/11	0.5625-24	.98 (24.9)	.875 (22.2)	.355 (9.0)	.197 (5.0)	.355 (9.0)
12/13	0.6875-24	1.16 (29.5)	1.000 (25.4)	.491 (12.5)	.236 (6.0)	.491 (12.5)
14/15	0.8125-20	1.28 (32.5)	1.125 (28.6)	.565 (14.4)	.236 (6.0)	.565 (14.4)
16/17	0.9375-20	1.41 (35.8)	1.250 (31.8)	.690 (17.5)	.276 (7.0)	.690 (17.5)
18/19	1.0625-18	1.52 (38.6)	1.375 (34.9)	.769 (19.5)	.335 (8.5)	.769 (19.5)
20/21	1.1875-18	1.64 (41.7)	1.500 (38.1)	.894 (22.7)	.394 (10.0)	.894 (22.7)
22/23	1.3125-18	1.77 (45.0)	1.625 (41.3)	1.019 (25.9)	.394 (10.0)	1.019 (25.9)
24/25	1.4375-18	1.89 (48.0)	1.750 (44.5)	1.134 (28.8)	.591 (15.0)	1.134 (28.8)

© 2025 Glenair, Inc • 1211 Air Way, Glendale, CA 91201 • 818-247-6000 • www.glenair.com • U.S. CAGE code 06324 •
SuperNine MIL-DTL-38999 Series I Type · Dimensions in Inches (millimeters) are subject to change without notice.

MIL-DTL-38999 Series I Type
370F*001 Backshell, environmental, spin coupling

FEATURES

- "Endbell" style backshell fits MIL-DTL-38999 Series I and II connectors.
- Environmentally-sealed with silicone O-ring and cable grommet.
- Straight, 45° or 90° cable routing with spin coupling attachment.
- For use with unshielded jacketed cable.
- Type H heavy duty cable clamp has stainless steel telescoping fillister head screws and lockwashers. Low-profile nut also available
- Supplied in aluminum or SS.

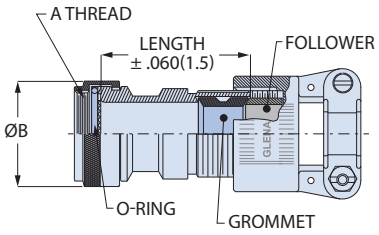

Saddle Clamp

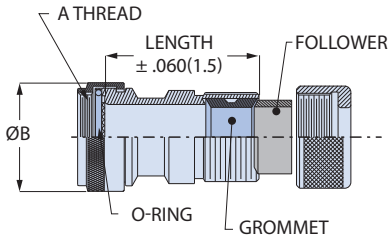

Nut

HOW TO ORDER

Sample Part Number	370FS001	M	16	08	D	3

Basic Part Number

370FS001 S = Straight
370FA001 A = 90° Elbow
370FB001 B = 45° Elbow
370FH001 H = 45° Cut/Weld
370FJ001 J = 90° Cut/Weld
370FM001 M = 45° Full Radius
370FN001 N = 90° Full Radius

Material and Finish

C = Alum/ Black Anodize
M = Alum/ Electroless Nickel
MT = Alum/ Nickel-PTFE
NF = Alum/ Olive Drab Cadmium
ZR = Alum/ Black Zinc-Nickel
TZ = Alum/ Tin-Zinc
Z1 = SST/ Passivated
(Profiles H, J, M, N, S only)

Shell Size

09, **11**, **13**, **15**, **17**, **19**, **21**, **23**, **25**

Entry Size

Entry Size	Max Cable Dia.	Shell Size*	Entry Size	Max Cable Dia.	Shell Size*
03	.250 (7.9)	08-24	16	.937 (23.8)	20-24
04	.312 (7.9)	10-24	20	1.250 (31.8)	24
06	.437 (11.1)	12-24	24	1.375 (34.9)	-
08	.562 (14.3)	14-24	28	1.625 (41.3)	-
10	.625 (15.9)	16-24	32	1.875 (47.6)	-
12	.750 (19.1)	18-24			

* If selected entry size exceeds shell size range, a Style 2 transition adapter will be included. See Maximum Entry Size for details.

Strain Relief

H = Saddle Clamp
D = Nut

Saddle Clamp

Nut

Length

3 = 1.5 inches
4 = 2.0 inches
6 = 3.0 inches
8 = 4.0 inches

Applies to Profile S only.
If Entry Size is greater than "Maximum Entry Size" (see next page), then 2 inch minimum applies.

Shell Size	A Thread UNEF-2B	øB Max
8/9	0.4375-28	.650 16.5
10/11	0.5625-24	.770 19.6
12/13	0.6875-24	.890 22.6
14/15	0.812W5-20	1.020 25.9
16/17	0.9375-20	1.150 29.2
18/19	1.0625-18	1.230 31.2
20/21	1.1875-18	1.360 34.5
22/23	1.3125-18	1.480 37.6
24/25	1.4375-18	1.730 43.9

PROFILE SELECTION GUIDE

S Straight

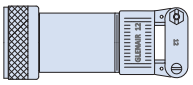

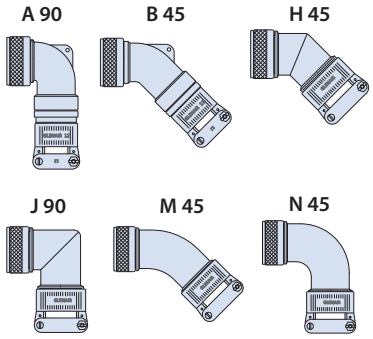

MIL-DTL-38999 Series I Type
370F*001 Backshell, environmental, spin coupling

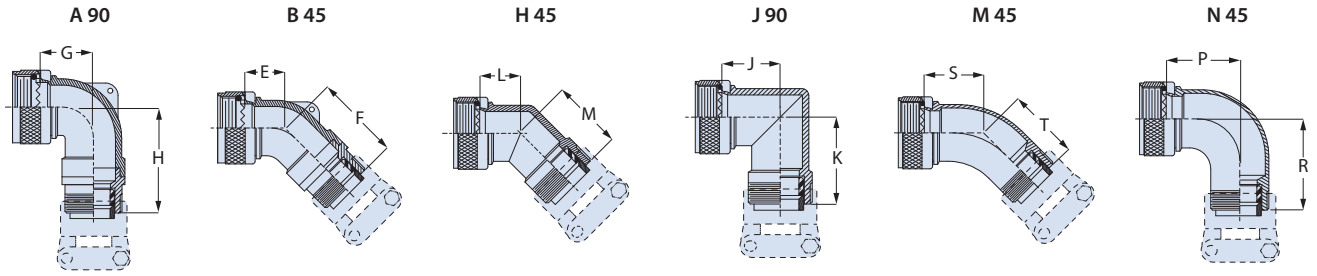

Shell Size	E Max	F Max	G Max	H Max	J Max	K Max	L Max	M Max	P Max	R Max	S Max	T Max
8/9	.457 (11.61)	1.622 (41.20)	.500 (12.70)	1.632 (41.45)	.834 (21.18)	1.144 (29.06)	.726 (18.44)	1.036 (26.31)	1.125 (28.58)	1.445 (36.70)	.817 (20.75)	1.127 (28.63)
10/11	.520 (13.21)	1.682 (42.72)	.595 (15.11)	1.752 (44.50)	.898 (22.81)	1.209 (30.71)	.753 (19.13)	1.062 (26.97)	1.250 (31.75)	1.570 (39.88)	.861 (21.87)	1.181 (30.00)
12/13	.582 (14.78)	1.742 (44.25)	.610 (15.49)	1.772 (45.01)	.956 (24.28)	1.266 (32.16)	.777 (19.74)	1.087 (27.61)	1.375 (34.92)	1.695 (43.05)	.911 (23.14)	1.231 (31.27)
14/15	.645 (16.38)	2.062 (52.37)	.700 (17.78)	2.072 (52.63)	1.018 (25.86)	1.328 (33.73)	.802 (20.37)	1.113 (28.27)	1.500 (38.10)	1.820 (46.23)	.965 (24.51)	1.285 (32.64)
16/17	.738 (18.75)	2.172 (55.17)	.885 (22.48)	2.162 (54.91)	1.081 (27.46)	1.391 (35.33)	.828 (21.03)	1.138 (28.91)	1.625 (41.28)	1.945 (49.40)	1.014 (25.76)	1.334 (33.88)
18/19	.926 (23.52)	2.362 (59.99)	.975 (24.76)	2.332 (59.23)	1.125 (28.58)	1.435 (36.45)	.847 (21.51)	1.157 (29.39)	1.750 (44.45)	2.070 (52.58)	1.064 (27.03)	1.384 (35.15)
20/21	.926 (23.52)	2.362 (59.99)	.975 (24.76)	2.332 (59.23)	1.188 (30.18)	1.498 (38.05)	.873 (22.17)	1.183 (30.05)	1.875 (47.63)	2.195 (55.75)	1.118 (28.40)	1.438 (36.53)
22/23	1.020 (25.91)	2.512 (63.80)	1.125 (28.58)	2.442 (62.03)	1.250 (31.75)	1.560 (39.62)	.898 (22.81)	1.208 (30.68)	2.000 (50.80)	2.320 (58.93)	1.172 (29.77)	1.492 (37.90)
24/25	1.020 (25.91)	2.512 (63.80)	1.125 (28.58)	2.442 (62.03)	1.312 (33.32)	1.623 (41.22)	.942 (23.93)	1.234 (31.34)	2.125 (53.97)	2.445 (62.10)	1.221 (31.01)	1.541 (39.14)

STRAIN RELIEF DIMENSIONS

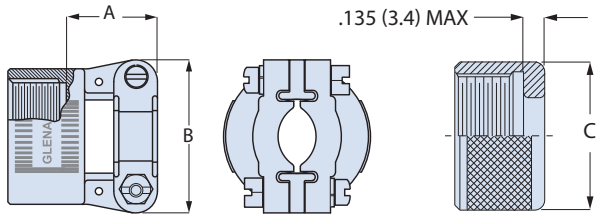

Saddle Clamp

Nut

Entry Size	A Max	B Max	øC Max	Cable Range Min	Cable Range Max
03	.780 (19.81)	.957 (24.31)	.630 (16.00)	.125 (3.18)	.250 (6.35)
04	.780 (19.81)	.957 (24.31)	.755 (19.18)	.125 (3.18)	.312 (7.92)
06	.780 (19.81)	1.145 (29.08)	.942 (23.93)	.250 (6.35)	.437 (11.10)
08	.780 (19.81)	1.332 (33.83)	1.067 (27.10)	.312 (7.92)	.562 (14.27)
10	.780 (19.81)	1.332 (33.83)	1.192 (30.28)	.350 (8.89)	.625 (15.88)
12	.811 (20.60)	1.551 (39.40)	1.380 (35.05)	.500 (12.70)	.750 (19.05)
16	.905 (22.99)	1.770 (44.96)	1.535 (38.99)	.625 (15.88)	.937 (23.80)
20	1.092 (27.74)	2.113 (53.67)	1.848 (46.94)	.875 (22.23)	1.250 (31.75)
24	1.124 (28.55)	2.363 (60.02)	2.255 (57.28)	1.000 (25.40)	1.375 (34.92)
28	1.399 (35.53)	2.770 (70.36)	2.505 (63.63)	1.250 (31.75)	1.625 (41.28)
32	1.399 (35.53)	3.020 (76.71)	2.755 (69.98)	1.437 (36.50)	1.875 (47.63)

* Not applicable to Style D Nut.

MAXIMUM ENTRY SIZE

Shell Size	Maximum Entry Size
8/9	03
10/11	04
12/13	06
14/15	08
16/17	10
18/19	12
20/21	12
22/23	16
24/25	20

If the selected entry size exceeds the maximum size in this table, the backshell will have a front adapter. This is called a Style 2 backshell.

Style 2 Straight Backshell

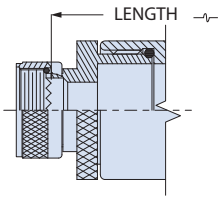

The minimum length code increases from **3** (1 1/2 inches) to **4** (2 inches).

Style 2 45° and 90° Backshells

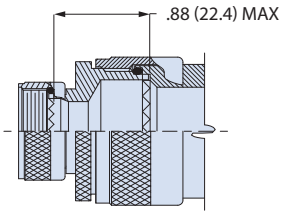

For 45° and 90° backshells, the length increases by .88 inches.

© 2025 Glenair, Inc • 1211 Air Way, Glendale, CA 91201 • 818-247-6000 • www.glenair.com • U.S. CAGE code 06324 •
SuperNine MIL-DTL-38999 Series I Type · Dimensions in Inches (millimeters) are subject to change without notice.

MIL-DTL-38999 Series I Type
440F*143 Composite, shrink boot, ultra low profile 90°

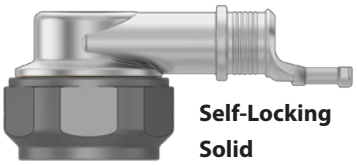

Self-Locking Solid

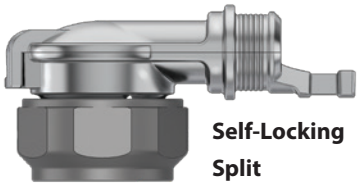

Self-Locking Split

FEATURES

- Qwik-Ty® banding backshell with micro banding porch and elliptical entry. Fits MIL-DTL-38999 Series I and II connectors.
- Ultra low-profile 90° cable routing.
- Lightweight glass-filled composite construction with self-locking coupling nut IAW AS85049.
- Split-shell version has lid for wiring access.
- Anti-decoupling mechanism provides audible detented coupling and prevents backoff under high vibration.
- Supplied as discrete accessory or with optional micro-band strap (for cable shield termination) and/or shrink boot (for added strain relief and environmental protection.

HOW TO ORDER

Sample Part Number	44FW143	XM	18	D	B	T	S
Basic Part Number	**44FW143 E** = 90° Split **440FW143 W** = 90° Solid						
Finish	**XM** = Electroless Nickel **XMT** = Nickel-PTFE **XW** = Olive Drab Cadmium **XTZ** = Tin-Zinc Coupling nut is unplated, black color.						
Shell Size	**09**, **11**, **13**, **15**, **17**, **19**, **21**, **23**, **25**						
Drain Holes	Omit if not required **D** = Drain Holes						
Band	Omit if not required **B** = Micro Band Included (supplied flat/uncoiled)						
Shrink Boot	Omit if not required **T** = Shrink Boot Included						
Slot	Omit if not required. See Figure 1. **S** = Pigtail Termination Slots						

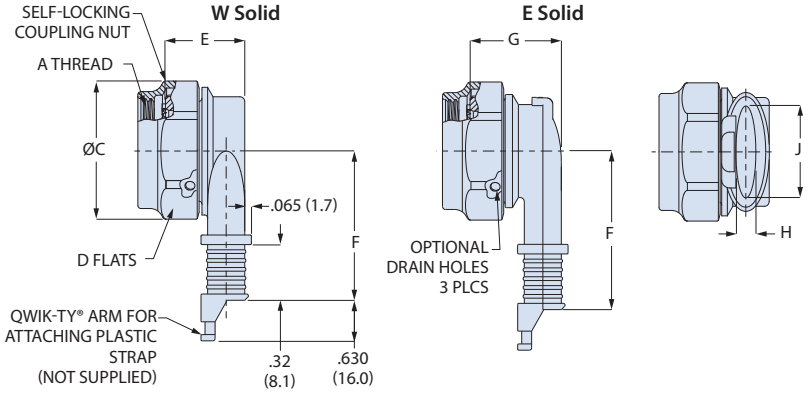

Shell Size	Profile	A Thread UNEF-2B	øC Max	D Hex Flats	E Max	F ± .03(0.8)	G Max	H ± .06 (1.5)	J ± .09 (2.3)
8/9	E, W	0.4375-28	.86 (21.84)	.750 (19.05)	.63 (16.00)	1.042 (26.47)	.81 (20.57)	.160 (4.06)	.304 (7.72)
10/11	E, W	0.5625-24	.98 (24.89)	.875 (22.23)	.66 (16.76)	1.107 (28.12)	.81 (20.57)	.174 (4.42)	.432 (10.97)
12/13	E, W	0.6875-24	1.16 (29.46)	1.000 (25.40)	.72 (18.29)	1.174 (29.82)	.82 (20.83)	.195 (4.95)	.546 (13.87)
14/15	E, W	0.8125-20	1.28 (32.51)	1.125 (28.58)	.83 (21.08)	1.241 (31.52)	.88 (22.35)	.315 (8.00)	.670 (17.02)
16/17	E, W	0.9375-20	1.41 (35.81)	1.250 (31.75)	.91 (23.11)	1.305 (33.15)	.93 (23.62)	.385 (9.78)	.796 (20.22)
18/19	E, W	1.0625-18	1.52 (38.61)	1.375 (34.92)	.93 (23.62)	1.371 (34.82)	.99 (25.15)	.445 (11.30)	.902 (22.91)
20/21	E, W	1.1875-18	1.64 (41.66)	1.500 (38.10)	1.04 (26.42)	1.438 (36.53)	1.06 (26.92)	.525 (13.34)	1.027 (26.09)
22/23	E, W	1.3125-18	1.77 (44.96)	1.625 (41.28)	1.12 (28.45)	1.505 (38.23)	1.13 (28.70)	.595 (15.11)	1.152 (29.26)
24/25	E	1.4375-18	1.89 (48.01)	1.750 (44.45)	N/A	1.850 (46.99)	1.05 (26.67)	.450 (11.43)	1.460 (37.08)
24/25	W	1.4375-18 UNEF	1.89 (48.01)	1.75 (44.45)	1.18 (29.97)	1.572 (39.93)	N/A	.655 (16.64)	1.276 (32.41)

FIGURE 1: SLOTS

Optional pigtail shield termination slots are located on banding platform. Profile E split version has one slot. Profile W solid version has two slots.

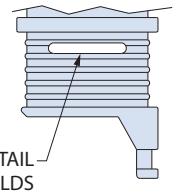

BAND

Optional SST band strap provides fast, cost-effective and highly reliable termination of braided metallic shielding.

Band P/N	Length
601-060	8.13 (206)

SHRINK BOOT

Optional heatshrink boot provides cable strain relief and environmental protection. Type 1 high-performance semi-rigid elastomer resists fuels and oils. Operating temperature range -75 to +150 °C.

MIL-DTL-38999 Series I Type
447F*326 Composite, shrink boot, micro band

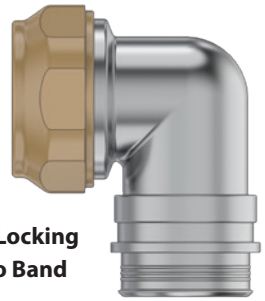

Self-Locking Micro Band

FEATURES

- Low-profile banding backshell with micro banding porch. Fits MIL-DTL-38999 Series I and II connectors.
- Lightweight glass-filled composite construction with self-locking coupling nut IAW AS85049.
- Anti-decoupling mechanism provides audible detented coupling and prevents backoff under high vibration.
- Supplied as discrete accessory or with optional micro-band strap (for cable shield termination) and/or shrink boot (for added strain relief and environmental protection.

HOW TO ORDER

Sample Part Number	447FS326	XM	18	10	D	K	T	S
Basic Part Number	**44FW143 S** = Straight **447FT326 T** = 45° **447FW326 W** = 90°							
Finish	**XM** = Electroless Nickel **XMT** = Nickel-PTFE **XW** = Olive Drab Cadmium **XTZ** = Tin-Zinc Coupling nut is unplated.							
Shell Size	**09**, **11**, **13**, **15**, **17**, **19**, **21**, **23**, **25**							
Entry Size	See Table I							
Drain Holes	Omit if not required **D** = Drain Holes							
Band	Omit if not required **K** = Pre-Coiled Micro Band Included With							
Shrink Boot	Omit if not required **T** = Shrink Boot Included With Backshell							
Slot	Omit if not required. See Figure 1. **S** = Pigtail Termination Slots							

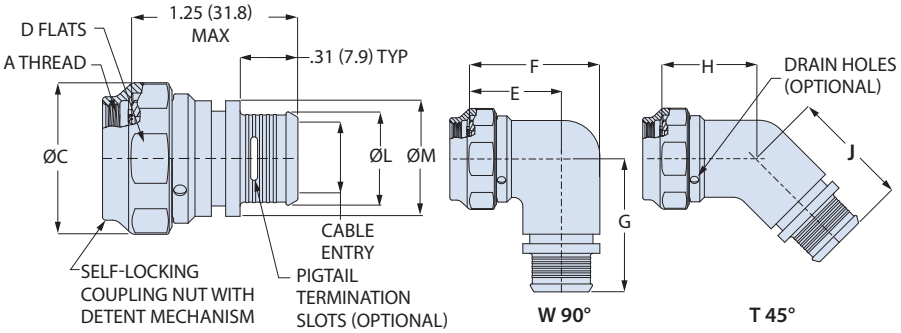

TABLE 1: ENTRY SIZE

Entry Size	Cable Entry ± .03 (0.8)	øL ± .015 (0.4)	øM ± .015 (0.4)	Shell Sizes
02	.13 (3.30)	.250 (6.35)	.386 (9.80)	08-24
03	.19 (4.83)	.316 (8.03)	.452 (11.48)	08-24
04	.25 (6.35)	.382 (9.70)	.510 (12.95)	08-24
05	.31 (7.87)	.448 (11.38)	.584 (14.83)	10-24
06	.38 (9.65)	.515 (13.08)	.651 (16.54)	10-24
07	.44 (11.18)	.582 (14.78)	.718 (18.24)	12-24
08	.50 (12.70)	.647 (16.43)	.783 (19.89)	12-24
09	.56 (14.22)	.713 (18.11)	.849 (21.56)	14-24
10	.63 (16.00)	.780 (19.81)	.873 (22.17)	14-24
11	.69 (17.53)	.847 (21.51)	.983 (24.97)	16-24
12	.75 (19.05)	.913 (23.19)	1.049 (26.64)	16-24
13	.81 (20.57)	.979 (24.87)	1.115 (28.32)	18-24
14	.88 (22.35)	1.054 (26.77)	1.190 (30.23)	20-24
15	.94 (23.88)	1.115 (28.32)	1.251 (31.78)	20-24
16	1.00 (25.40)	1.183 (30.05)	1.319 (33.50)	22-24
17	1.06 (26.92)	1.251 (31.78)	1.387 (35.23)	22-24
18	1.13 (28.70)	1.320 (33.53)	1.456 (36.98)	24
19	1.19 (30.23)	1.389 (35.28)	1.525 (38.73)	24

Shell Size	A Thread UNEF-2B	øB Max	D Hex Flats	E ± .06(1.5)	F ± .09(2.3)	G ± .09(2.3)	H ± .06(1.5)	J ± .09(2.3)	Max Entry Size
8/9	0.4375-28	.86 (21.84)	.750 (19.05)	.69 (17.53)	.88 (22.35)	1.06 (26.92)	.72 (18.29)	.87 (22.10)	04
10/11	0.5625-24	.98 (24.89)	.875 (22.23)	.75 (19.05)	1.00 (25.40)	1.13 (28.70)	.75 (19.05)	.93 (23.62)	06
12/13	0.6875-24	1.16 (29.46)	1.000 (25.40)	.81 (20.57)	1.13 (28.70)	1.19 (30.23)	.75 (19.05)	1.00 (25.40)	08
14/15	0.8125-20	1.28 (32.51)	1.125 (28.58)	.88 (22.35)	1.31 (33.27)	1.25 (31.75)	.76 (19.30)	1.03 (26.16)	10
16/17	0.9375-20	1.41 (35.81)	1.250 (31.75)	.94 (23.88)	1.38 (35.05)	1.31 (33.27)	.78 (19.81)	1.05 (26.67)	12
18/19	1.0625-18	1.52 (38.61)	1.375 (34.92)	.97 (24.64)	1.44 (36.58)	1.38 (35.05)	.79 (20.07)	1.06 (26.92)	13
20/21	1.1875-18	1.64 (41.66)	1.500 (38.10)	1.06 (26.92)	1.63 (41.40)	1.48 (37.59)	.82 (20.83)	1.09 (27.69)	15
22/23	1.3125-18	1.77 (44.96)	1.625 (41.28)	1.13 (28.70)	1.75 (44.45)	1.54 (39.12)	.86 (21.84)	1.13 (28.70)	17
24/25	1.4375-18	1.89 (48.01)	1.750 (44.45)	1.19 (30.23)	1.88 (47.75)	1.60 (40.64)	.89 (22.61)	1.16 (29.46)	19

MICRO BAND

Optional SST band strap provides fast, cost-effective and highly reliable termination of braided metallic shielding.

Entry Sizes	Pre-Coiled Band P/N	Length
02 - 08	601-061	8.13 (206)
09 - 19	601-065	14.25 (362)

SHRINK BOOT

Optional heatshrink boot provides cable strain relief and environmental protection. Type 1 high-performance semi-rigid elastomer resists fuels and oils. Operating temperature range -75 to +150 °C.

© 2025 Glenair, Inc • 1211 Air Way, Glendale, CA 91201 • 818-247-6000 • www.glenair.com • U.S. CAGE code 06324 •
SuperNine MIL-DTL-38999 Series I Type · Dimensions in Inches (millimeters) are subject to change without notice.

MIL-DTL-38999 Series I Type 870F001 Swing-Arm® saddle clamp

Self-Locking

FEATURES

- Swing-Arm saddle clamp for use with MIL-DTL-38999 Series I and II connectors and unshielded wire bundles
- Coupling nut has anti-decoupling mechanism for audible detented coupling and prevents backoff under high vibration.
- Available in composite, aluminum or stainless steel.
- Adjustable arms pivot to 0°, 45° or 90° positions. Arms have self-locking threaded inserts to withstand high vibration.
- Full radius saddles have self-locking clinch nuts and are available in two clamp sizes: standard clamp fits most wire bundles, large clamp has increased clearance for oversize wire bundles.

HOW TO ORDER

Sample Part Number	870F001	XB	22	B
Basic Part Number	**870F001**			
Finish	**Composite** **XB** = No Finish (Black) **Aluminum** **M** = Electroless Nickel **NF** = Olive Drab Cadmium **MT** = Nickel-PTFR **TZ** = Tin-Zinc **ZR** = Black Zinc-Nickel **Stainless Steel** **Z1** = Passivated			
Shell Size	**09**, **11**, **13**, **15**, **17**, **19**, **21**, **23**, **25**			
Clamp Size	**A** = Standard Clamp **B** = Large Clamp			

MATERIAL/FINISH

Composite (Code XB)
- **Coupling nut, body, arms, saddles:** polyetherimide (PEI), unplated
- **Screws, washers, inserts:** stainless steel/ passivated
- **Anti-decoupling springs:** thermoplastic
- **Clinch Nuts:** stainless steel, silver plated

Aluminum (Codes M, MT, NF, TZ, ZR)
- **Coupling nut, body, arms, saddles:** aluminum
- **Screws, washers, inserts:** stainless steel/ passivated
- **Anti-decoupling springs:** thermoplastic
- **Clinch Nuts:** Codes M, MT, TZ and ZR: stainless steel, silver plated.
  - **Code NF:** stainless steel/ olive drab cadmium

Stainless Steel (Code Z1)
- **Coupling nut, body, arms, saddles:** SST
- **Screws, washers, inserts:** stainless steel/ passivated
- **Anti-decoupling springs:** stainless steel
- **Clinch Nuts:** stainless steel, silver plated

ALUMINUM AND SST VERSIONS

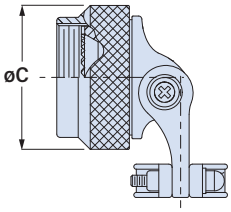

Aluminum and stainless steel versions have round knurled coupling nuts.

CLAMP DIMENSIONS

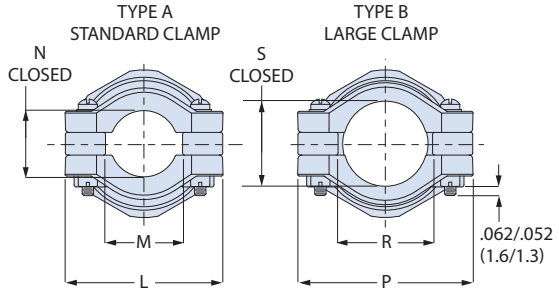

Standard Clamp				Large Clamp			
Shell Size	L Max	M Min	N Ref.	Shell Size	P Max	R Min	S Ref.
08	.98 (24.89)	.22 (5.59)	.265 (6.73)	08	.98 (24.89)	.33 (8.38)	.356 (9.04)
10	1.05 (26.67)	.27 (6.86)	.310 (7.87)	10	1.20 (30.48)	.45 (11.43)	.422 (10.72)
12	1.20 (30.48)	.35 (8.89)	.422 (10.72)	12	1.45 (36.83)	.62 (15.75)	.637 (16.18)
14	1.30 (33.02)	.47 (11.94)	.538 (13.67)	14	1.54 (39.12)	.68 (17.27)	.707 (17.96)
16	1.44 (36.58)	.55 (13.97)	.590 (14.99)	16	1.60 (40.64)	.80 (20.32)	.759 (19.28)
18	1.56 (39.62)	.62 (15.75)	.660 (16.76)	18	1.73 (43.94)	.90 (22.86)	.841 (21.36)
20	1.69 (42.93)	.70 (17.78)	.744 (18.90)	20	1.95 (49.53)	1.05 (26.67)	.996 (25.30)
22	1.77 (44.96)	.78 (19.81)	.826 (20.98)	22	2.08 (52.83)	1.18 (29.97)	1.060 (26.92)
24	1.89 (48.01)	.85 (21.59)	.896 (22.76)	24	2.32 (58.93)	1.30 (33.02)	1.124 (28.55)

© 2025 Glenair, Inc • 1211 Air Way, Glendale, CA 91201 • 818-247-6000 • www.glenair.com • U.S. CAGE code 06324 •
SuperNine MIL-DTL-38999 Series I Type · Dimensions in Inches (millimeters) are subject to change without notice.

MIL-DTL-38999 Series I Type
870F001 Swing-Arm® saddle clamp

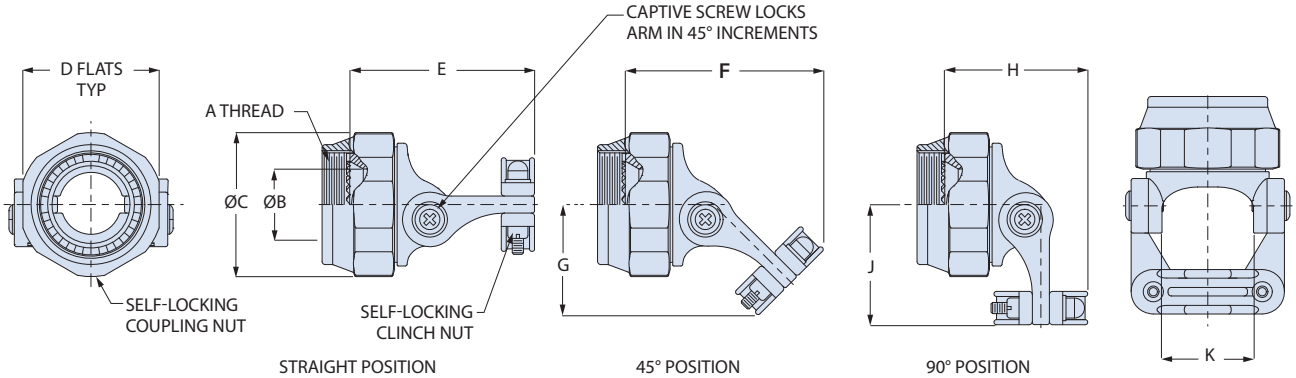

Shell Size	A Thread UNEF-2B	øB Min	C Max	D Flats	E Max	F Max	G Max	H Max	J Max	K Ref.
8/9	0.4375-28	.264 (6.71)	.812 (20.62)	.750 (19.05)	1.43 (36.32)	1.35 (34.29)	.78 (19.81)	.91 (23.11)	.87 (22.10)	.393 (9.98)
10/11	0.5625-24	.392 (9.96)	.938 (23.83)	.875 (22.23)	1.50 (38.10)	1.45 (36.83)	.87 (22.10)	.94 (23.88)	.96 (24.38)	.455 (11.56)
12/13	0.6875-24	.506 (12.85)	1.125 (28.58)	1.000 (25.40)	1.56 (39.62)	1.60 (40.64)	.97 (24.64)	1.12 (28.45)	1.03 (26.16)	.598 (15.19)
14/15	0.8125-20	.631 (16.03)	1.250 (31.75)	1.125 (28.58)	1.57 (39.88)	1.68 (42.67)	1.02 (25.91)	1.21 (30.73)	1.10 (27.94)	.710 (18.03)
16/17	0.9375-20	.756 (19.20)	1.375 (34.92)	1.250 (31.75)	1.66 (42.16)	1.78 (45.21)	1.09 (27.69)	1.29 (32.77)	1.16 (29.46)	.839 (21.31)
18/19	1.0625-18	.844 (21.44)	1.500 (38.10)	1.375 (34.92)	1.66 (42.16)	1.86 (47.24)	1.14 (28.96)	1.39 (35.31)	1.22 (30.99)	.934 (23.72)
20/21	1.1875-18	.970 (24.64)	1.625 (41.28)	1.500 (38.10)	1.81 (45.97)	2.02 (51.31)	1.24 (31.50)	1.50 (38.10)	1.29 (32.77)	1.068 (27.13)
22/23	1.3125-18	1.094 (27.79)	1.750 (44.45)	1.625 (41.28)	1.84 (46.74)	2.09 (53.09)	1.30 (33.02)	1.57 (39.88)	1.36 (34.54)	1.197 (30.40)
24/25	1.4375-18	1.219 (30.96)	1.875 (47.63)	1.750 (44.45)	2.00 (50.80)	2.20 (55.88)	1.45 (36.83)	1.64 (41.66)	1.55 (39.37)	1.323 (33.60)

© 2025 Glenair, Inc • 1211 Air Way, Glendale, CA 91201 • 818-247-6000 • www.glenair.com • U.S. CAGE code 06324 •
SuperNine MIL-DTL-38999 Series I Type · Dimensions in Inches (millimeters) are subject to change without notice.

MIL-DTL-38999 Series I Type
870F002 Swing-Arm® saddle clamp, braid sock, composite

Self-Locking

FEATURES

- Composite Swing-Arm saddle clamp with integrated shield sock for use with MIL-DTL-38999 Series I and II connectors.
- Supplied with 12 inches (305 mm) of shield braid attached to metal interface ring.
- Braid choices include 34 AWG nickel/copper, 34 AWG tin/copper, ultralightweight AmberStrand® or microfilament nickel/SST Armorlite®.
- Swing-Arm coupling nut has anti-decoupling mechanism with audible detented coupling
- Adjustable arms with captive screw-locks pivot to 0°, 45° or 90° positions.
- Full radius saddles have self-locking clinch nuts and are available in two clamp sizes: standard clamp fits most wire bundles, large clamp has increased clearance for oversize wire bundles.

HOW TO ORDER

Sample Part Number	870F002	BM	22	A	N	J	14

Basic Part Number	**870f002**
Interface Ring Material/Finish	See Table I
Shell Size	**09**, **11**, **13**, **15**, **17**, **19**, **21**, **23**, **25**
Clamp Size	See Clamp Dimensions on next page **A** Standard Clamp **B** = Large Clamp
Band Type	**N** = 34 AWG Nickel/Copper Braid **T** = 34 AWG Tin/Copper Braid **A** = AmberStrand® Nickel/Composite Braid **L** = Microfilament ArmorLite® Nickel/SST Braid
Splice Ring and Band	Omit if not required **K** = Splice ring and standard band **J** = Splice ring and slim standard band
Braid Length	Omit for standard 12 inch length **14** = Length in 1 inch increments, 6 inch min "14" = 14 inches.

TABLE 1: INTERFACE RING MATERIAL / FINISH

Aluminum		Brass	
M	Electroless Nickel	**BM**	Electroless Nickel
NF	Olive Drab Cadmium and Electroless Nickel (Figure 1)	**BN**	Olive Drab Cadmium and Electroless Nickel (Figure 1)
MT	Nickel-PTFE	**BMT**	Nickel-PTFE
TZ	Tin-Zinc		
ZR	Black Zinc-Nickel		

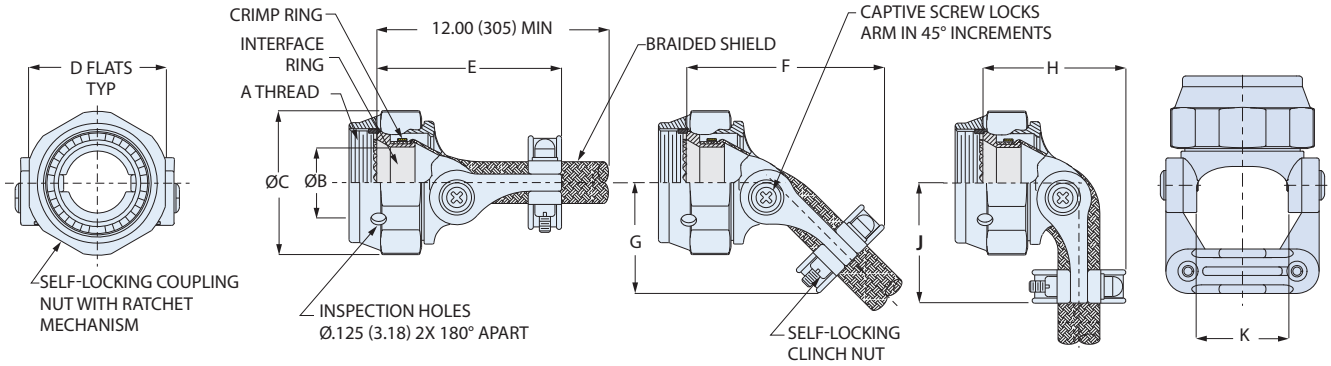

Shell Size	A Thread UNEF-2B	ø B Min	ø C Max	D Flats	E Max	F Max	G Max	H Max	J Max	K Ref.
8/9	0.4375-28	.264 (6.71)	.812 (20.62)	.750 (19.05)	1.50 (38.10)	1.43 (36.32)	.76 (19.30)	.95 (24.13)	.84 (21.34)	.393 (9.98)
10/11	0.5625-24	.392 (9.96)	.938 (23.83)	.875 (22.23)	1.54 (39.12)	1.49 (37.85)	.82 (20.83)	.99 (25.15)	.90 (22.86)	.455 (11.56)
12/13	0.6875-24	.506 (12.85)	1.125 (28.58)	1.000 (25.40)	1.62 (41.15)	1.64 (41.66)	.92 (23.37)	1.14 (28.96)	1.00 (25.40)	.598 (15.19)
14/15	0.8125-20	.631 (16.03)	1.250 (31.75)	1.125 (28.58)	1.63 (41.40)	1.73 (43.94)	.98 (24.89)	1.24 (31.50)	1.07 (27.18)	.710 (18.03)
16/17	0.9375-20	.756 (19.20)	1.375 (34.92)	1.250 (31.75)	1.73 (43.94)	1.86 (47.24)	1.08 (27.43)	1.36 (34.54)	1.13 (28.70)	.839 (21.31)
18/19	1.0625-18	.844 (21.44)	1.500 (38.10)	1.375 (34.92)	1.73 (43.94)	1.93 (49.02)	1.12 (28.45)	1.46 (37.08)	1.20 (30.48)	.934 (23.72)
20/21	1.1875-18	.970 (24.64)	1.625 (41.28)	1.500 (38.10)	1.88 (47.75)	2.08 (52.83)	1.21 (30.73)	1.55 (39.37)	1.26 (32.00)	1.068 (27.13)
22/23	1.3125-18	1.094 (27.79)	1.750 (44.45)	1.625 (41.28)	1.91 (48.51)	2.15 (54.61)	1.27 (32.26)	1.63 (41.40)	1.33 (33.78)	1.197 (30.40)
24/25	1.4375-18	1.219 (30.96)	1.875 (47.63)	1.750 (44.45)	1.94 (49.28)	2.23 (56.64)	1.33 (33.78)	1.70 (43.18)	1.40 (35.56)	1.323 (33.60)

© 2025 Glenair, Inc • 1211 Air Way, Glendale, CA 91201 • 818-247-6000 • www.glenair.com • U.S. CAGE code 06324 •

MIL-DTL-38999 Series I Type
870F002 Swing-Arm® saddle clamp, braid sock, composite

CLAMP DIMENSIONS

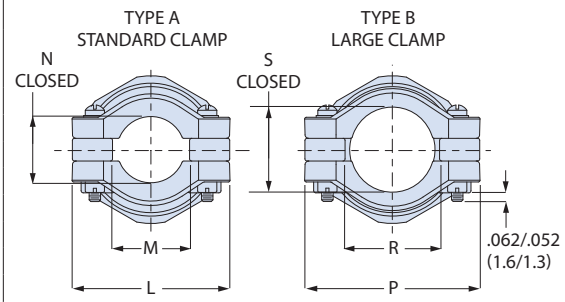

Standard Clamp				Large Clamp			
Shell Size	L Max	M Min	N Ref.	Shell Size	P Max	R Min	S Ref.
08	.98 (24.89)	.22 (5.59)	.265 (6.73)	08	.98 (24.89)	.33 (8.38)	.356 (9.04)
10	1.05 (26.67)	.27 (6.86)	.310 (7.87)	10	1.20 (30.48)	.45 (11.43)	.422 (10.72)
12	1.20 (30.48)	.35 (8.89)	.422 (10.72)	12	1.45 (36.83)	.62 (15.75)	.637 (16.18)
14	1.30 (33.02)	.47 (11.94)	.538 (13.67)	14	1.54 (39.12)	.68 (17.27)	.707 (17.96)
16	1.44 (36.58)	.55 (13.97)	.590 (14.99)	16	1.60 (40.64)	.80 (20.32)	.759 (19.28)
18	1.56 (39.62)	.62 (15.75)	.660 (16.76)	18	1.73 (43.94)	.90 (22.86)	.841 (21.36)
20	1.69 (42.93)	.70 (17.78)	.744 (18.90)	20	1.95 (49.53)	1.05 (26.67)	.996 (25.30)
22	1.77 (44.96)	.78 (19.81)	.826 (20.98)	22	2.08 (52.83)	1.18 (29.97)	1.060 (26.92)
24	1.89 (48.01)	.85 (21.59)	.896 (22.76)	24	2.32 (58.93)	1.30 (33.02)	1.124 (28.55)

MATERIAL/FINISH

Coupling nut, body, arms, saddles: polyetherimide (PEI)/unplated
Screws, washers, inserts: stainless steel/passivated
Anti-decoupling spring: thermoplastic
interface Ring: brass or aluminum
Crimp ring: copper alloy/tin
Splice ring (optional): thermoplastic
Clinch Nuts: stainless steel/silver
Band (optional): stainless steel/passivated
Braid:
- **Code N:** 34 AWG nickel-coated copper
- **Code T:** 34 AWG tin-coated copper,
- **Code A:** *AmberStrand®* ultralightweight nickel-coated polymer
- **Code L:** *ArmorLite®* lightweight microfilament nickel-coated 316L stainless steel

INTERFACE RING AND BRAID

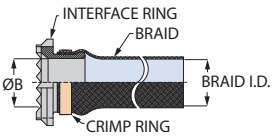

Shell Size	ø B Min	Braid I.D.
08	.264 (6.71)	.375 (9.52)
10	.392 (9.96)	.375 (9.52)
12	.506 (12.85)	.500 (12.70)
14	.631 (16.03)	.500 (12.70)
16	.756 (19.20)	.781 (19.84)
18	.844 (21.44)	.781 (19.84)
20	.970 (24.64)	1.000 (25.40)
22	1.094 (27.79)	1.000 (25.40)
24	1.219 (30.96)	1.250 (31.75)

FIGURE 1

NF and BN selective finish

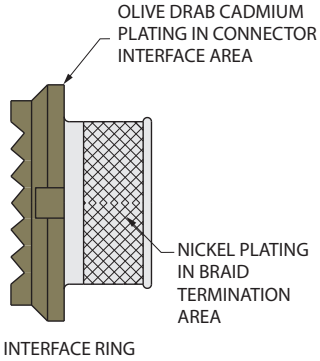

SPLICE RING AND PRE-COILED BAND (K AND J OPTIONS)

Splice Ring

Band

Optional splice ring provides a reliable, low resistance method of splicing Swing-Arm braid to wire bundle braid. Snap splice ring over wire bundle, then overlap braid sock, pigtails and cable braid. install band around splice ring and braid using Band-Master ATS banding tool.

Slim Standard Band is 50% lighter weight than standard band with no reduction in strength.

Shell Size	Band Part Number Standard	Band Part Number Slim Standard	Splice Ring Part Number	øA ± .03 (0.8)	øB ± .03 (0.8)
08	601-006	601-571	687-207XB04	.25 (6.35)	.40 (10.16)
10	601-006	601-571	687-207XB06	.38 (9.65)	.53 (13.46)
12	601-006	601-571	687-207XB08	.50 (12.70)	.65 (16.51)
14	601-006	601-571	687-207XB10	.63 (16.00)	.78 (19.81)
16	601-006	601-571	687-207XB12	.75 (19.05)	.90 (22.86)
18	601-041	601-571	687-207XB14	.88 (22.35)	1.03 (26.16)
20	601-041	601-573	687-207XB16	1.00 (25.40)	1.15 (29.21)
22	601-041	601-573	687-207XB18	1.13 (28.70)	1.28 (32.51)
24	601-041	601-573	687-207XB20	1.25 (31.75)	1.40 (35.56)

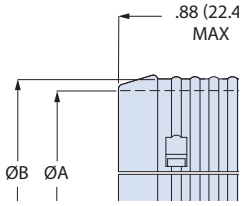

Banding Tool for Standard Band
601-100

Banding Tool for Slim Standard Band
601-109

© 2025 Glenair, Inc • 1211 Air Way, Glendale, CA 91201 • 818-247-6000 • www.glenair.com • U.S. CAGE code 06324 •
SuperNine MIL-DTL-38999 Series I Type · Dimensions in Inches (millimeters) are subject to change without notice.

MIL-DTL-38999 Series I Type
870F005 Swing-Arm® saddle clamp, EMI banding adapter, aluminum/SST

Self-Locking

FEATURES

- Aluminum or SS Swing-Arm saddle clamp with self-locking coupling nut for use with MIL-DTL-38999 Series I and II connectors and EMI/RFI shielded cable.
- "Do-Drop-In" banding adapter with optional T-Slot for band termination of individual and overall cable braid.
- Terminate shield braid to adapter with optional Band-Master ATS® pre-coiled banding strap. .
- Adjustable arms with captive screw-locks pivot to 0°, 45° or 90° positions.
- Full radius saddles have self-locking clinch nuts and are available in two clamp sizes: standard clamp fits most wire bundles, large clamp has increased clearance for oversize wire bundles.

HOW TO ORDER

Sample Part Number	870F005	M	22	A	S	K

Basic Part Number	**870F005**
Material/Finish	See Table 1.
Shell Size	**09**, **11**, **13**, **15**, **17**, **19**, **21**, **23**, **25**
Clamp Size	**A** = Standard Clamp **B** = Large Clamp
Banding Adapter Slots	Omit if not required. See Figure 2. **S** = "T" Slots in Banding Adapter for Shield Pigtails
Band	Omit if not required. **K** = Pre-Coiled Micro Band included With Clamp **J** = Pre-Coiled Slim Micro Band included With Clamp

TABLE 1: INTERFACE RING MATERIAL / FINISH

Aluminum		Brass	
M	Electroless nickel	**BM**	Brass interface ring, nickel plated
MT	Nickel-PTFE	**BMT**	Brass interface ring, nickel-PTFE plated
NF	Olive drab cadmium	**Z1**	SST interface ring, passivated
NFS	Olive drab cadmium, selective (fig. 1)	**ZM**	SST interface ring, nickel plated
TZ	Tin-zinc		
ZR	Black zinc-nickel		

FIGURE 1

Material/ finish code **NFS**

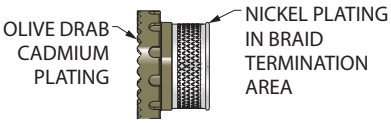

FIGURE 2

Banding adapter slots

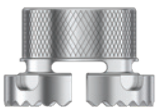

Route pigtail shield braids into optional "T" slots in banding adapter.

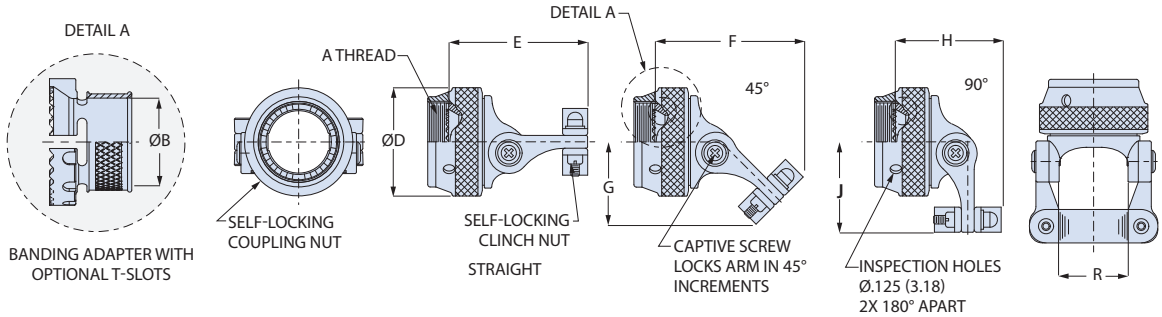

Shell Size	A Thread UNEF-2B	ø B Min	D Max	E Max	F Max	G Max	H Max	J Max	R Ref.
8/9	0.4375-28	.178 (4.52)	.812 (20.62)	1.55 (39.37)	1.45 (36.83)	.77 (19.56)	.98 (24.89)	.87 (22.10)	.393 (9.98)
10/11	0.5625-24	.305 (7.75)	.938 (23.83)	1.61 (40.89)	1.56 (39.62)	.87 (22.10)	1.05 (26.67)	.96 (24.38)	.455 (11.56)
12/13	0.6875-24	.404 (10.26)	1.125 (28.58)	1.66 (42.16)	1.71 (43.43)	.97 (24.64)	1.22 (30.99)	1.03 (26.16)	.598 (15.19)
14/15	0.8125-20	.526 (13.36)	1.250 (31.75)	1.67 (42.42)	1.79 (45.47)	1.02 (25.91)	1.32 (33.53)	1.10 (27.94)	.710 (18.03)
16/17	0.9375-20	.631 (16.03)	1.375 (34.92)	1.77 (44.96)	1.88 (47.75)	1.08 (27.43)	1.38 (35.05)	1.16 (29.46)	.839 (21.31)
18/19	1.0625-18	.748 (19.00)	1.500 (38.10)	1.77 (44.96)	1.96 (49.78)	1.13 (28.70)	1.49 (37.85)	1.22 (30.99)	.934 (23.72)
20/21	1.1875-18	.877 (22.28)	1.625 (41.28)	1.92 (48.77)	2.13 (54.10)	1.24 (31.50)	1.61 (40.89)	1.29 (32.77)	1.068 (27.13)
22/23	1.3125-18	.999 (25.37)	1.750 (44.45)	1.95 (49.53)	2.20 (55.88)	1.30 (33.02)	1.68 (42.67)	1.36 (34.54)	1.197 (30.40)
24/25	1.4375-18	1.127 (28.63)	1.875 (47.63)	2.10 (53.34)	2.31 (58.67)	1.39 (35.31)	1.75 (44.45)	1.55 (39.37)	1.323 (33.60)

© 2025 Glenair, Inc • 1211 Air Way, Glendale, CA 91201 • 818-247-6000 • www.glenair.com • U.S. CAGE code 06324 •

MIL-DTL-38999 Series I Type
870F005 Swing-Arm® saddle clamp, EMI banding adapter, aluminum/SST

CLAMP DIMENSIONS

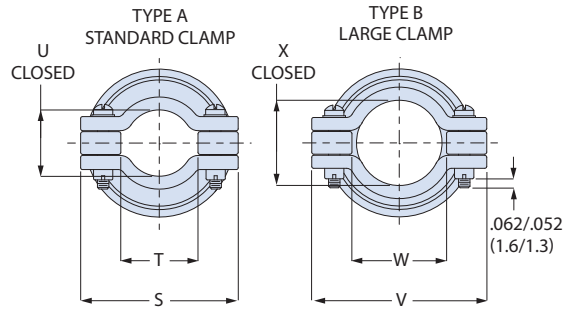

Standard Clamp				Large Clamp			
Shell Size	S Max	T Min	U Ref.	Shell Size	V Max	W Min	X Ref.
08	.97 (24.64)	.22 (5.59)	.264 (6.71)	08	.98 (24.89)	.33 (8.38)	.356 (9.04)
10	1.03 (26.16)	.29 (7.37)	.310 (7.87)	10	1.20 (30.48)	.45 (11.43)	.422 (10.72)
12	1.21 (30.73)	.34 (8.64)	.422 (10.72)	12	1.45 (36.83)	.62 (15.75)	.637 (16.18)
14	1.32 (33.53)	.45 (11.43)	.538 (13.67)	14	1.54 (39.12)	.68 (17.27)	.707 (17.96)
16	1.45 (36.83)	.55 (13.97)	.590 (14.99)	16	1.60 (40.64)	.80 (20.32)	.759 (19.28)
18	1.54 (39.12)	.65 (16.51)	.660 (16.76)	18	1.73 (43.94)	.90 (22.86)	.841 (21.36)
20	1.67 (42.42)	.74 (18.80)	.744 (18.90)	20	1.95 (49.53)	1.05 (26.67)	.996 (25.30)
22	1.79 (45.47)	.87 (22.10)	.826 (20.98)	22	2.08 (52.83)	1.18 (29.97)	1.060 (26.92)
24	1.92 (48.77)	.99 (25.15)	.896 (22.76)	24	2.32 (58.93)	1.30 (33.02)	1.124 (28.55)

MATERIAL/FINISH

- Aluminum (Codes M, MT, NF, NFS TZ, ZR)
- Coupling nut, body, arms, saddles: aluminum
- Screws, washers, inserts: stainless steel/ passivated
- Anti-decoupling springs: thermoplastic
- Clinch nuts: Codes M, MT, TZ and ZR: stainless steel, silver plated. Code NF, NFS: stainless steel/ olive drab cadmium
- Banding adapter: aluminum
- Band (optional): stainless steel/ passivated
- Stainless Steel (Codes BM, BMT, Z1, ZM)
- Coupling nut, body, arms, saddles, anti-decoupling springs, screws, washers, inserts: stainless steel, passivated
- Clinch nuts: stainless steel, silver plated
- Banding adapter:
  Code BM: brass/ electroless nickel
  Code BMT: brass/ nickel-PTFE
  Code Z1: stainless steel/ passivated
  Code ZM: stainless steel/ electroless nickel
- Band (optional): stainless steel/ passivated

BAND INFORMATION

Band

Micro Band Tool
601-101

Slim Micro Band Tool
601-122

Terminate cable braid to band adapter with optional pre-coiled banding strap. Glenair's Band-Master ATS® banding system provides quick, easy, cost-effective and highly reliable termination. Band is passivated stainless steel.

Shell Size	Pre-Coiled Micro Band Part No.	Pre-Coiled Slim Micro Band Part No.	Length	Max Diameter
8 – 12	601-061	601-601	8.125 (206.38)	.88 (22.35)
14 – 24	601-065	601-603	14.25 (361.95)	1.88 (47.75)

© 2025 Glenair, Inc • 1211 Air Way, Glendale, CA 91201 • 818-247-6000 • www.glenair.com • U.S. CAGE code 06324 •
SuperNine MIL-DTL-38999 Series I Type · Dimensions in Inches (millimeters) are subject to change without notice.

MIL-DTL-38999 Series I Type
871F004 Swing-Arm® clamp, EMI banding adapter, composite

Self-Locking

FEATURES

- Composite Swing-Arm saddle clamp with self-locking coupling nut for use with MIL-DTL-38999 Series I and II connectors and EMI/RFI shielded cable.
- "Do-Drop-In" banding adapter with optional T-Slot for band termination of individual and overall cable braid.
- Terminate shield braid to adapter with optional Band-Master ATS® pre-coiled banding strap. .
- Adjustable arms with captive screw-locks pivot to 0°, 45° or 90° positions.
- Full radius saddles have self-locking clinch nuts and are available in two clamp sizes: standard clamp fits most wire bundles, large clamp has increased clearance for oversize wire bundles.

HOW TO ORDER

Sample Part Number	871F004	M	22	S	K
Basic Part Number	**870F005**				
Banding Adapter Material/Finish	**M** = Alum/Electroless Nickel **NF** = Alum/Olive Drab Cadmium **NFS** = Alum/O.D. Cadmium, selective (fig. 1) **MT** = Alum/Nickel-PTFE **TZ** = Alum/Tin-Zinc **BM** = Brass/Electroless Nickel **BN** = Brass/Olive Drab Cadmium **BNS** = Brass/O.D. Cadmium, selective (fig. 1) **BMT** = Brass/Nickel-PTFE				
Shell Size	**09, 11, 13, 15, 17, 19, 21, 23, 25**				
Banding Adapter Slots	Omit if not required. See Figure 2 **S =** "T" Slots in Banding Adapter for Shield Pigtails				
Band	Omit if not required. **K** = Pre-Coiled Micro Band included With Clamp **J** = Pre-Coiled Slim Micro Band included With Clamp				

FIGURE 1

Material/ finish code **NFS**, **BNS**

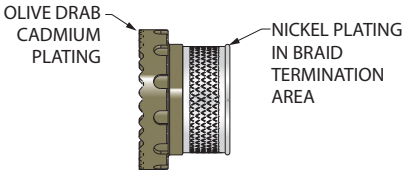

FIGURE 2

Banding adapter slots

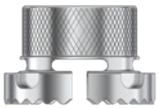

Route pigtail shield braids into optional "T" slots in banding adapter.

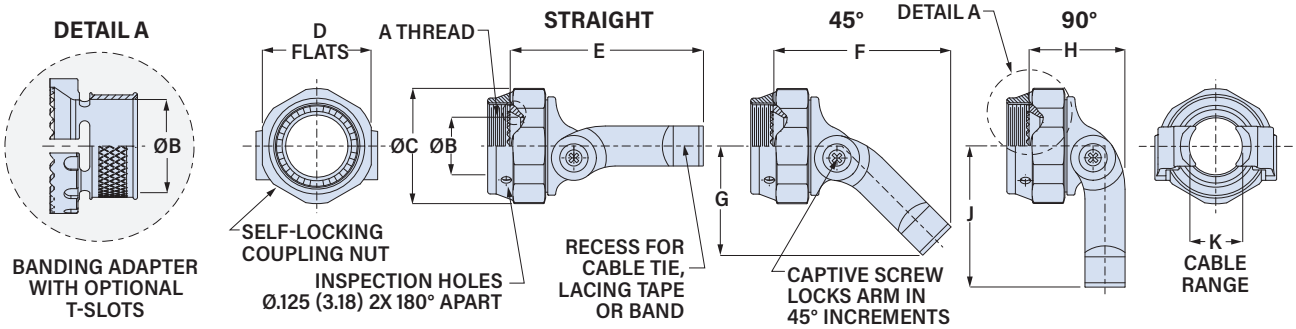

Shell Size	A Thread UNEF-2B	ø B Min	ø C Max	D Flats	E Max	F Max	G Max	H Max	J Max	K Ref. Max	K Ref. Min
8/9	0.4375-28	.178 (4.52)	.812 (20.62)	.750 (19.05)	1.79 (45.47)	1.57 (39.88)	.87 (22.10)	.96 (24.38)	1.12 (28.45)	.393 (9.98)	.098 (2.49)
10/11	0.5625-24	.305 (7.75)	.938 (23.83)	.875 (22.23)	1.80 (45.72)	1.57 (39.88)	.89 (22.61)	.96 (24.38)	1.15 (29.21)	.455 (11.56)	.121 (3.07)
12/13	0.6875-24	.404 (10.26)	1.125 (28.58)	1.000 (25.40)	2.08 (52.83)	1.88 (47.75)	1.10 (27.94)	1.05 (26.67)	1.44 (36.58)	.598 (15.19)	.157 (3.99)
14/15	0.8125-20	.526 (13.36)	1.250 (31.75)	1.125 (28.58)	2.08 (52.83)	1.88 (47.75)	1.16 (29.46)	1.32 (33.53)	1.50 (38.10)	.710 (18.03)	.210 (5.33)
16/17	0.9375-20	.631 (16.03)	1.375 (34.92)	1.250 (31.75)	2.29 (58.17)	2.13 (54.10)	1.28 (32.51)	1.21 (30.73)	1.68 (42.67)	.839 (21.31)	.246 (6.25)
18/19	1.0625-18	.748 (19.00)	1.500 (38.10)	1.375 (34.92)	2.28 (57.91)	2.13 (54.10)	1.35 (34.29)	1.21 (30.73)	1.81 (45.97)	.934 (23.72)	.277 (7.04)
20/21	1.1875-18	.877 (22.28)	1.625 (41.28)	1.500 (38.10)	2.75 (69.85)	2.54 (64.52)	1.63 (41.40)	1.37 (34.80)	2.12 (53.85)	1.068 (27.13)	.313 (7.95)
22/23	1.3125-18	.999 (25.37)	1.750 (44.45)	1.625 (41.28)	2.75 (69.85)	2.54 (64.52)	1.67 (42.42)	1.37 (34.80)	2.16 (54.86)	1.197 (30.40)	.349 (8.86)
24/25	1.4375-18	1.127 (28.63)	1.875 (47.63)	1.750 (44.45)	2.96 (75.18)	2.75 (69.85)	1.84 (46.74)	1.46 (37.08)	2.41 (61.21)	1.323 (33.60)	.380 (9.65)

© 2025 Glenair, Inc • 1211 Air Way, Glendale, CA 91201 • 818-247-6000 • www.glenair.com • U.S. CAGE code 06324 •

MIL-DTL-38999 Series I Type
871F004 Swing-Arm® clamp, EMI banding adapter, composite

MATERIAL/FINISH

- Coupling nut, body, arms: thermoplastic, black
- Screws, washers, inserts: stainless steel/ passivated
- Anti-decoupling springs: thermoplastic
- Banding adapter: aluminum alloy or brass
- Band (optional): stainless steel/ passivated

BAND INFORMATION

Band

Micro Band Tool
601-101

Slim Micro Band Tool
601-122

Terminate cable braid to band adapter with optional pre-coiled banding strap. Glenair's Band-Master ATS® banding system provides quick, easy, cost-effective and highly reliable termination. Band is passivated stainless steel.

Shell Size	Pre-Coiled Micro Band Part No.	Pre-Coiled Slim Micro Band Part No.	Length	Max Diameter
8 – 12	601-061	601-601	8.125 (206.38)	.88 (22.35)
14 – 24	601-065	601-603	14.25 (361.95)	1.88 (47.75)

© 2025 Glenair, Inc • 1211 Air Way, Glendale, CA 91201 • 818-247-6000 • www.glenair.com • U.S. CAGE code 06324 •
SuperNine MIL-DTL-38999 Series I Type · Dimensions in Inches (millimeters) are subject to change without notice.

MIL-DTL-38999 Series I Type
667-467 ProSeal™ spring-action receptacle cover

MIL-DTL-38999 Series I Receptacle Cover

FEATURES

- Waterproof, ProSeal™ Spring-Action Protective Cover for MIL-DTL-38999 Series I scoop-proof bayonet receptacles.
- Fits standard connector jam- nut or square flange mounting holes.
- Snap lid onto connector face for dust-tight and water-tight seal (IP67 rating).
- Lid remains in open position when fully raised.
- -40 to +120 °C temperature rating.

MATERIAL AND FINISH

- Lid, lever arm, gimbal: thermoplastic, black
- Bracket: aluminum, plated per finish code
- Spring, pin, rivet: SST/passivate
- Sleeve: Delrin
- Gasket: silicone
- Conductive gasket: silver-filled silicone

HOW TO ORDER

Sample Part Number	667-467	M	17	T0	W	-59

Basic Part Number	**667-467**
Bracket Finish	See Table 1.
Shell Size	**09**, **11**, **13**, **15**, **17**, **19**, **21**, **23**, **25**
Panel Thickness	Panel Thickness Code / Square Flange / Jam Nut **T0** / Front Mount / N/A **T1** / .062 ± .030 (1.6 ± 0.8) / .062 ± .030 (1.6 ± 0.8) **T2** / .125 ± .030 (3.2 ± 0.8) / N/A
Mounting Type	**J =** Jam Nut (fig. 1) **W** = Square Flange (fig. 2)
Modification Code	Omit for standard silicone gasket **-59** = Silver-Filled Silicone EMI Gasket

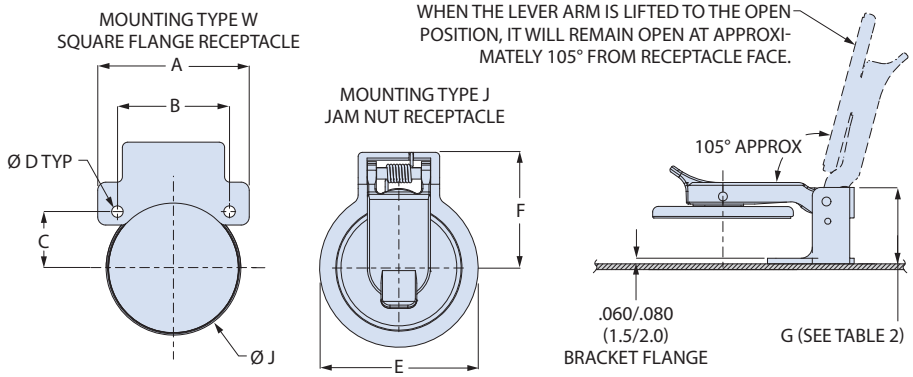

Shell Size	A Max	B ± .015 (0.4)	C ± .015 (0.4)	D ±.008 (0.2)	E ±.031	F Max	J Max
09	.937 (23.80)	.719 (18.26)	.360 (9.14)	.128 (3.25)	1.031 (26.19)	.841 (21.36)	.727 (18.47)
11	1.031 (26.19)	.812 (20.62)	.406 (10.31)	.128 (3.25)	1.125 (28.58)	.903 (22.94)	.853 (21.67)
13	1.126 (28.60)	.906 (23.01)	.453 (11.51)	.128 (3.25)	1.375 (34.92)	1.028 (26.11)	1.003 (25.48)
15	1.220 (30.99)	.969 (24.61)	.485 (12.32)	.128 (3.25)	1.560 (39.62)	1.113 (28.27)	1.128 (28.65)
17	1.311 (33.30)	1.062 (26.97)	.531 (13.49)	.128 (3.25)	1.625 (41.28)	1.149 (29.18)	1.253 (31.83)
19	1.437 (36.50)	1.156 (29.36)	.578 (14.68)	.128 (3.25)	1.750 (44.45)	1.365 (34.67)	1.360 (34.54)
21	1.563 (39.70)	1.250 (31.75)	.625 (15.88)	.128 (3.25)	2.000 (50.80)	1.429 (36.30)	1.485 (37.72)
23	1.689 (42.90)	1.375 (34.92)	.688 (17.48)	.128 (3.25)	2.150 (54.61)	1.491 (37.87)	1.610 (40.89)
25	1.841 (46.76)	1.500 (38.10)	.750 (19.05)	.128 (3.25)	2.218 (56.34)	1.656 (42.06)	1.735 (44.07)

TABLE 2 G DIMENSION

Panel Thickness Code		Shell Size	G Dim. ± .06 (1.5) Type J Jam Nut	G Dim. ± .06 (1.5) Type W Square Flange
T0	Front Mount	09-19	N/A	1.039 (26.39)
		21-25	N/A	1.094 (27.79)
T1	.062 ± .030 (1.6 ± 0.8)	09-19	1.041 (26.44)	.977 (24.82)
		21-25	1.126 (28.60)	1.032 (26.21)
T2	.125 ± .030 (3.2 ± 0.8)	09-19	N/A	.915 (23.24)
		21-25	N/A	.970 (24.64)

TABLE 1 BRACKET FINISH

C	Black Anodize
M	Electroless Nickel
NF	Olive Drab Cadmium
MT	Nickel-PTFE
ZR	Black Zinc-Nickel
TZ	Tin-Zinc

MOUNTING TYPE

1 Mounting Type J

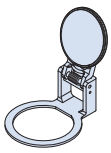

Jam Nut

2 Mounting Type W

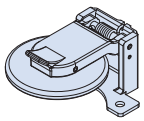

Square Flange

© 2025 Glenair, Inc • 1211 Air Way, Glendale, CA 91201 • 818-247-6000 • www.glenair.com • U.S. CAGE code 06324 •

MIL-DTL-38999 Series I Type
660-012 Plug protective cover

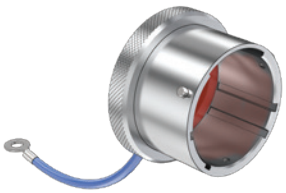

MIL-DTL-38999 Series I Receptacle Cover

FEATURES

- Standard protective cover for MIL-DTL-38999 Series I scoop-proof bayonet plug connectors including MS27467. Aluminum or stainless steel, with stainless steel fittings and bayonet pins. Silicone gasket.

HOW TO ORDER

Sample Part Number	660-012	NF	13	H	4	-60

Basic Part Number	**660-012**
Material/Finish	See Table 1.
Shell Size	**09**, **11**, **13**, **15**, **17**, **19**, **21**, **23**, **25**
Attachment Type	**N** = No Attachment See Table 2 for Attachment Types
Attachment Length	Omit for Attachment Type N Length in One Inch Increments
Attachment Ring	Omit for Attachment Types N and SK **-00** = No Ring See Table 3 for Attachment Ring Codes

TABLE 2 ATTACHMENT TYPE

D		**SST Bead Chain** .125 (3.2) diameter, size 6, -65 to +200 °C
F		**Wire Rope, Blue Nylon Jacket** 6/6 nylon over stainless steel rope, fair flexibility, good abrasion resistance, -55 to +100 °C
G		**Black Nylon Rope** Very flexible, good abrasion and fuel resistance, .094 (2.4) diameter, -55 to +100 °C
H	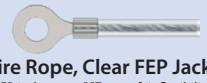	**Wire Rope, Clear FEP Jacket** Clear FEP jacket over SST rope, fair flexibility, good abrasion resistance, .100" diameter, -65 to +200 °C
S		**Sash Chain** #8 sash chain, stainless steel. Length tolerance is ± one link .280 (7.1)
SK		**Nylon Rope with Slip Knot** Very flexible, good abrasion and fuel resistance, .094 (2.4) diameter. Length includes .5" (13mm) dia. loop, -55 to +100 °C
T		**SST Wire Rope, No Jacket** Good flexibility, good abrasion resistance, .047 (1.2) diameter, passivated, -65 to +200 °C
U		**Wire Rope, Black Polyurethane** Stainless steel rope with black polyurethane coating, flexible, excellent abrasion resistance and resistance to fuels, .080" (2mm) diameter, -55 to +125 °C

TABLE 1 MATERIAL / FINISH

Aluminum	
C	Black Anodize
M	Electroless Nickel
NF	Olive Drab Cadmium
MT	Nickel-PTFE
ZR	Black Zinc-Nickel
TZ	Tin-Zinc
Stainless Steel	
Z1	Passivate

Shell Size	ø F ± .015 (0.4)	ø G Max
09	.572 (14.53)	.820 (20.83)
11	.700 (17.78)	.940 (23.88)
13	.850 (21.59)	1.070 (27.18)
15	.975 (24.76)	1.190 (30.23)
17	1.100 (27.94)	1.320 (33.53)
19	1.207 (30.66)	1.440 (36.58)
21	1.332 (33.83)	1.570 (39.88)
23	1.457 (37.01)	1.690 (42.93)
25	1.582 (40.18)	1.820 (46.23)

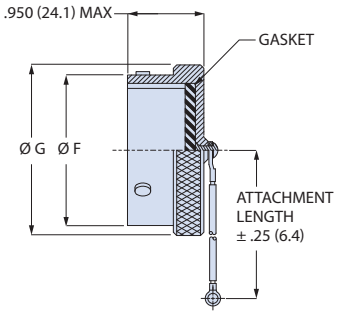

TABLE 3: INTERFACE RING MATERIAL / FINISH

EYELET

Code	Eyelet I.D. ± .010 (0.3)
-06	.125 (3.2)
-01	.140 (3.6)
-09	.156 (4.0)
-05	.167 (4.2)
-02	.182 (4.6)
-03	.191 (4.9)
-04	.197 (5.0)
-07	.218 (5.5)

CABLE TIE

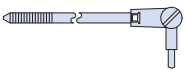

-WS
Black 6/6 nylon cable tie 1.77 (45.0) max. wire bundle dia.

STYLE A RING

Code	Ring I.D. ± .015 (0.4)
-095	.312 (7.9)
-100	.391 (9.9)
-101	.516 (13.1)
-103	.641 (16.3)
-104	.708 (18.0)
-105	.766 (19.5)
-106	.896 (22.8)
-107	1.016 (25.8)
-108	1.141 (29.0)
-208	1.203 (30.6)
-109	1.266 (32.2)
-110	1.391 (35.3)
-111	1.521 (38.6)
-112	1.641 (41.7)
-113	1.766 (44.9)
-114	1.891 (48.0)
-115	2.078 (52.8)
-116	2.406 (61.1)
-117	2.510 (63.8)

STYLE B RING

Code	Ring I.D. ± .015 (0.4)
-10	.593 (15.1)
-12	.718 (18.2)
-13	.765 (19.4)
-14	.844 (21.4)
-15	.890 (22.6)
-17	1.015 (25.8)
-19	1.140 (29.0)
-20	1.203 (30.6)
-21	1.265 (32.1)
-22	1.343 (34.1)
-24	1.484 (37.7)
-27	1.640 (41.7)
-29	1.765 (44.8)
-30	1.890 (48.0)
-31	1.953 (49.6)
-33	2.077 (52.8)
-36	2.187 (55.5)
-40	2.406 (61.1)
-44	2.656 (67.5)

SPLIT RING

Code	Ring I.D. ± .015 (0.4)
-50	.425 (10.8)
-52	.485 (12.3)
-54	.640 (16.3)
-56	.750 (19.1)
-58	.890 (22.6)
-60	1.015 (25.8)
-62	1.095 (27.8)
-64	1.130 (28.7)
-66	1.250 (31.8)
-68	1.350 (34.3)
-70	1.375 (34.9)
-72	1.485 (37.7)
-74	1.625 (41.3)
-76	1.750 (44.5)
-80	1.980 (50.3)
-84	2.235 (56.8)
-86	2.310 (58.7)
-88	2.475 (62.9)
-90	2.655 (67.4)

© 2025 Glenair, Inc • 1211 Air Way, Glendale, CA 91201 • 818-247-6000 • www.glenair.com • U.S. CAGE code 06324 •
SuperNine MIL-DTL-38999 Series I Type · Dimensions in Inches (millimeters) are subject to change without notice.

MIL-DTL-38999 Series I Type
661-002 Receptacle cover, spring-loaded EMI

M38999/I EMI Receptacle Cover

TABLE 1 FINISH	
M	Electroless Nickel
NF	Olive Drab Cadmium
MTNF	Olive Drab CadmiumNickel-PTFE
ZR	Black Zinc-Nickel
TZ	Tin-Zinc

TABLE 2 ATTACHMENT TYPE	
D	**SST Bead Chain** .125 (3.2) diameter, size 6, -65 to +200 °C
F	**Wire Rope, Blue Nylon Jacket** 6/6 nylon over stainless steel rope, fair flexibility, good abrasion resistance, -55 to +100 °C
G	**Black Nylon Rope** Very flexible, good abrasion and fuel resistance, .094 (2.4) diameter, -55 to +100 °C
H	**Wire Rope, Clear FEP Jacket** Clear FEP jacket over SST rope, fair flexibility, good abrasion resistance, .100" diameter, -65 to +200 °C
S	**Sash Chain** #8 sash chain, stainless steel. Length tolerance is ± one link .280 (7.1)
SK	**Nylon Rope with Slip Knot** Very flexible, good abrasion and fuel resistance, .094 (2.4) diameter. Length includes .5" (13mm) dia. loop, -55 to +100 °C
T	**SST Wire Rope, No Jacket** Good flexibility, good abrasion resistance, .047 (1.2) diameter, passivated, -65 to +200 °C
U	**Wire Rope, Black Polyurethane** Stainless steel rope with black polyurethane coating, flexible, excellent abrasion resistance and resistance to fuels, .080" (2mm) diameter, -55 to +125 °C

HOW TO ORDER						
Sample Part Number	661-002	NF	09	U	6	-05
Basic Part Number	661-002					
Bracket Finish	See Table 1.					
Shell Size	09, 11, 13, 15, 17, 19, 21, 23, 25					
Attachment Type	N No Attachment See Table 2 for Attachment Types					
Attachment Length	Omit for Attachment Type N Length in One Inch Increments					
Attachment Ring	Omit for Attachment Types N and SK -00 No Ring See Table 3 for Attachment Ring Codes					

FEATURES

- Standard protective cover for MIL-DTL-38999 Series I bayonet receptacles including MS27466, MS27468, MS27469, MS27470, MS27471, MS27496 and MS27505. EMI protected with silicone/Monel wire mesh conductive gasket. Wave spring and disk provide consistent gasket sealing. Aluminum cover. Hardware, rivets, wave spring and screws are passivated stainless steel. Conductive EMI gasket is silicone with embedded Monel wire mesh and is rated for -65 to +200 °C.

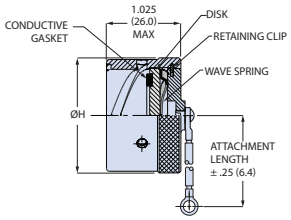

Shell Size	ø H Max	Shell Size	ø H Max
09	.844 (21.44)	19	1.500 (38.10)
11	.975 (24.76)	21	1.625 (41.28)
13	1.125 (28.58)	23	1.750 (44.45)
15	1.250 (31.75)	25	1.875 (47.63)
17	1.406 (35.71)		

TABLE 1: INTERFACE RING MATERIAL / FINISH

EYELET

Code	Eyelet I.D. ± .010 (0.3)
-06	.125 (3.2)
-01	.140 (3.6)
-09	.156 (4.0)
-05	.167 (4.2)
-02	.182 (4.6)
-03	.191 (4.9)
-04	.197 (5.0)
-07	.218 (5.5)

CABLE TIE

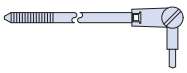

-WS
Black 6/6 nylon cable tie 1.77 (45.0) max. wire bundle dia.

STYLE A RING

Code	Ring I.D. ± .015 (0.4)
-095	.312 (7.9)
-100	.391 (9.9)
-101	.516 (13.1)
-103	.641 (16.3)
-104	.708 (18.0)
-105	.766 (19.5)
-106	.896 (22.8)
-107	1.016 (25.8)
-108	1.141 (29.0)
-208	1.203 (30.6)
-109	1.266 (32.2)
-110	1.391 (35.3)
-111	1.521 (38.6)
-112	1.641 (41.7)
-113	1.766 (44.9)
-114	1.891 (48.0)
-115	2.078 (52.8)
-116	2.406 (61.1)
-117	2.510 (63.8)

STYLE B RING

Code	Ring I.D. ± .015 (0.4)
-10	.593 (15.1)
-12	.718 (18.2)
-13	.765 (19.4)
-14	.844 (21.4)
-15	.890 (22.6)
-17	1.015 (25.8)
-19	1.140 (29.0)
-20	1.203 (30.6)
-21	1.265 (32.1)
-22	1.343 (34.1)
-24	1.484 (37.7)
-27	1.640 (41.7)
-29	1.765 (44.8)
-30	1.890 (48.0)
-31	1.953 (49.6)
-33	2.077 (52.8)
-36	2.187 (55.5)
-40	2.406 (61.1)
-44	2.656 (67.5)

SPLIT RING

Code	Ring I.D. ± .015 (0.4)
-50	.425 (10.8)
-52	.485 (12.3)
-54	.640 (16.3)
-56	.750 (19.1)
-58	.890 (22.6)
-60	1.015 (25.8)
-62	1.095 (27.8)
-64	1.130 (28.7)
-66	1.250 (31.8)
-68	1.350 (34.3)
-70	1.375 (34.9)
-72	1.485 (37.7)
-74	1.625 (41.3)
-76	1.750 (44.5)
-80	1.980 (50.3)
-84	2.235 (56.8)
-86	2.310 (58.7)
-88	2.475 (62.9)
-90	2.655 (67.4)

MIL-DTL-38999 Series I Type
M85049 Nut plate

Nut Plate with Chem Film

Nut Plate with Epoxy Primer

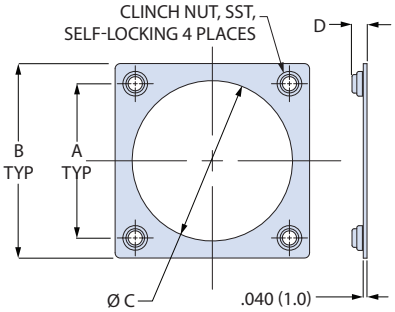

Full Perimeter

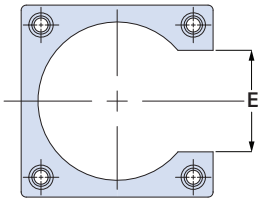

3/4 Perimeter

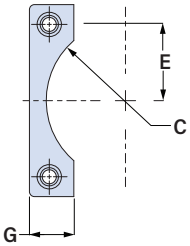

1/4 Perimeter

FEATURES

- M85049 nut plates fit MIL-DTL-38999 Series I, III, and IV connector receptacles with square flanges.
- Nut plates eliminate loose lockwashers and nuts for faster installation time and prevention of dropped hardware in hard-to-reach areas. Two finishes are available: chem film or epoxy primer. Passivated stainless steel clinch nuts, 6061 aluminum alloy plate.

FULL PERIMETER NUT PLATES FOR MIL-DTL-38999 SERIES I, III, AND IV CONNECTORS

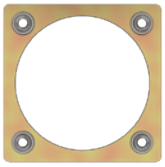

Shell Size	Part Number		A	B Max	øC Min	D Max	Threads
	Chem Film	Epoxy Primer	± .015 (0.4)				UNJC-3B
9 (A)	M85049/94-10	M85049/94-10-A	.719 (18.26)	1.034 (26.26)	.685 (17.40)	.166 (4.22)	4-40
11 (B)	M85049/94-12	M85049/94-12-A	.812 (20.62)	1.119 (28.42)	.820 (20.83)	.166 (4.22)	4-40
13 (C)	M85049/94-14	M85049/94-14-A	.906 (23.01)	1.213 (30.81)	.945 (24.00)	.166 (4.22)	4-40
15 (D)	M85049/94-16	M85049/94-16-A	.969 (24.61)	1.295 (32.89)	1.070 (27.18)	.166 (4.22)	4-40
17 (E)	M85049/94-18	M85049/94-18-A	1.062 (26.97)	1.421 (36.09)	1.195 (30.35)	.166 (4.22)	4-40
19 (F)	M85049/94-20	M85049/94-20-A	1.156 (29.36)	1.550 (39.37)	1.320 (33.53)	.166 (4.22)	4-40
21 (G)	M85049/94-22	M85049/94-22-A	1.250 (31.75)	1.680 (42.67)	1.440 (36.58)	.166 (4.22)	4-40
23 (H)	M85049/94-24	M85049/94-24-A	1.375 (34.92)	1.800 (45.72)	1.570 (39.88)	.183 (4.65)	6-32
25 (J)	M85049/94-25	M85049/94-25-A	1.500 (38.10)	1.910 (48.51)	1.643 (41.73)	.183 (4.65)	6-32

3/4 PERIMETER NUT PLATES FOR MIL-DTL-38999 SERIES I, III, AND IV CONNECTORS

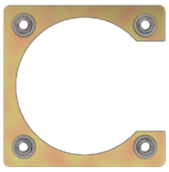

Shell Size	Part Number		A	B Max	øC Min	D Max	E	Threads
	Chem Film	Epoxy Primer	± .005 (0.1)				± .030 (0.8)	UNJC-3B
9 (A)	M85049/95-10A	M85049/95-10A-A	.719 (18.26)	1.034 (26.26)	.705 (17.91)	.166 (4.22)	.433 (11.00)	4-40
11 (B)	M85049/95-12A	M85049/95-12A-A	.812 (20.62)	1.119 (28.42)	.840 (21.34)	.166 (4.22)	.530 (13.46)	4-40
13 (C)	M85049/95-14A	M85049/95-14A-A	.906 (23.01)	1.213 (30.81)	.969 (24.61)	.166 (4.22)	.624 (15.85)	4-40
15 (D)	M85049/95-16A	M85049/95-16A-A	.969 (24.61)	1.295 (32.89)	1.079 (27.41)	.166 (4.22)	.687 (17.45)	4-40
17 (E)	M85049/95-18A	M85049/95-18A-A	1.062 (26.97)	1.421 (36.09)	1.205 (30.61)	.166 (4.22)	.780 (19.81)	4-40
19 (F)	M85049/95-20A	M85049/95-20A-A	1.156 (29.36)	1.550 (39.37)	1.330 (33.78)	.166 (4.22)	.874 (22.20)	4-40
21 (G)	M85049/95-22A	M85049/95-22A-A	1.250 (31.75)	1.680 (42.67)	1.463 (37.16)	.166 (4.22)	.968 (24.59)	4-40
23 (H)	M85049/95-24B	M85049/95-24B-A	1.375 (34.92)	1.800 (45.72)	1.580 (40.13)	.183 (4.65)	1.031 (26.19)	6-32
25 (J)	M85049/95-25A	M85049/95-25A-A	1.500 (38.10)	1.906 (48.41)	1.643 (41.73)	.183 (4.65)	1.125 (28.58)	6-32

1/4 PERIMETER NUT PLATES FOR MIL-DTL-38999 SERIES I, III, AND IV CONNECTORS

Shell Size	Part Number		A	B Max	C Min	D Max	E	G Max	Threads
	Chem Film	Epoxy Primer	± .005 (0.1)				± .005 (0.1)		UNJC-3B
9 (A)	M85049/96-10	M85049/96-10-A	.719 (18.26)	1.034 (26.26)	.344 (8.74)	.166 (4.22)	.359 (9.12)	.308 (7.82)	4-40
11 (B)	M85049/96-12	M85049/96-12-A	.812 (20.62)	1.124 (28.55)	.410 (10.41)	.166 (4.22)	.406 (10.31)	.306 (7.77)	4-40
13 (C)	M85049/96-14	M85049/96-14-A	.906 (23.01)	1.218 (30.94)	.492 (12.50)	.166 (4.22)	.453 (11.51)	.306 (7.77)	4-40
15 (D)	M85049/96-16	M85049/96-16-A	.969 (24.61)	1.295 (32.89)	.532 (13.51)	.166 (4.22)	.484 (12.29)	.308 (7.82)	4-40
17 (E)	M85049/96-18	M85049/96-18-A	1.062 (26.97)	1.405 (35.69)	.610 (15.49)	.166 (4.22)	.531 (13.49)	.338 (8.59)	4-40
19 (F)	M85049/96-20	M85049/96-20-A	1.156 (29.36)	1.550 (39.37)	.657 (16.69)	.166 (4.22)	.578 (14.68)	.364 (9.25)	4-40
21 (G)	M85049/96-22	M85049/96-22-A	1.250 (31.75)	1.680 (42.67)	.724 (18.39)	.166 (4.22)	.625 (15.88)	.400 (10.16)	4-40
23 (H)	M85049/96-24	M85049/96-24-A	1.375 (34.92)	1.800 (45.72)	.782 (19.86)	.183 (4.65)	.687 (17.45)	.396 (10.06)	6-32
25 (J)	M85049/96-25	M85049/96-25-A	1.500 (38.10)	1.906 (48.41)	.814 (20.68)	.183 (4.65)	.750 (19.05)	.368 (9.35)	6-32

© 2025 Glenair, Inc • 1211 Air Way, Glendale, CA 91201 • 818-247-6000 • www.glenair.com • U.S. CAGE code 06324 •
SuperNine MIL-DTL-38999 Series I Type · Dimensions in Inches (millimeters) are subject to change without notice.

MIL-DTL-38999 Series I Type
Composite Swing-Arm® strain relief assembly procedure

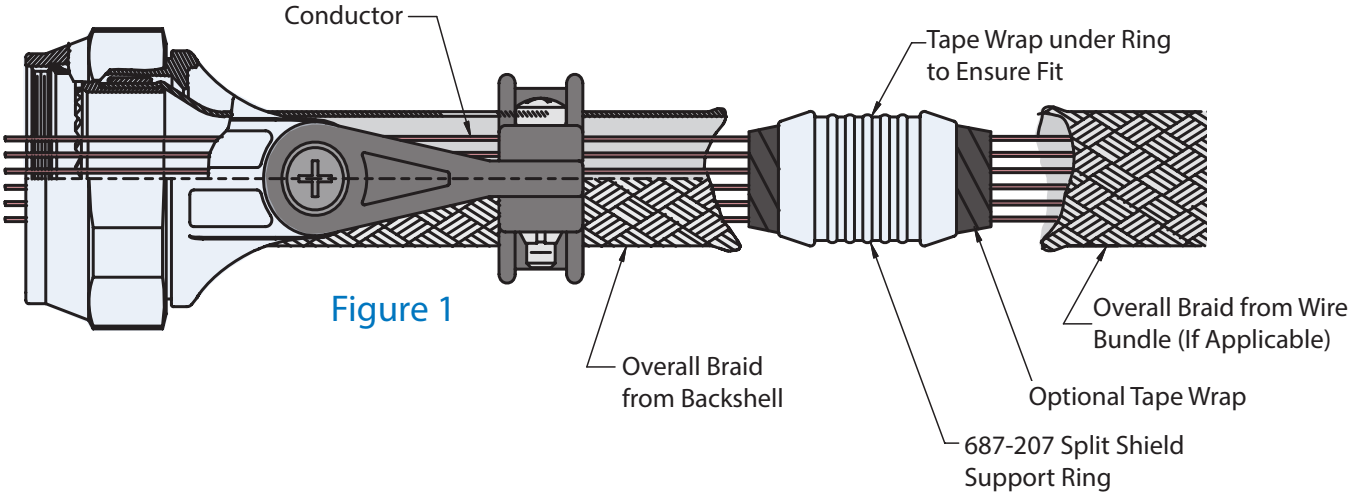

Figure 1

GLENAIR ASSEMBLY PROCEDURE (GAP-029) FOR , OFFERS EXTREMELY FAST AND TROUBLE-FREE TERMINATION OF EMI SHIELDING:

Choose Straight, 45° or 90° angle, and tighten screws to lock arms in place. Leave the saddle clamp hardware loose.

Next, insert the wire bundle into the backshell to determine if the braid transition angle from the backshell to wire bundle is less than 45°. If it is less than 45°, build up the wire bundle with tape and re-insert wire bundle into backshell to support the transition of overall braid from the backshell to the wire bundle.

Loosely assembly the adapter to the connector and push back the backshell braid. Insert the wire bundle into the adapter and bottom it against the connector. Holding the cable, mark or tag the location where the shield support ring (Glenair Part Number 687-207) will be located. This distance may vary depending on your technique and the flexibility of the wire bundle immediately to the rear of the saddles (Figure 1).

At the marked location, near the shield support ring, wrap tape around wire bundle for snug fit of shield support ring (Figure 1). Tape wrap is optional.

You can then slide the overall braid from the wire bundle side over the shield support ring, trimming braid ends and tucking extra braid underneath itself for a clean appearance.

For pin connectors, slide the backshell forward, and hand tighten backshell to connector. Then, evenly space shield pigtails (Figure 3) or solder sleeve pigtails (Figure 4) around the shield support ring. Cut the pigtails so that the end of the pigtails slightly beyond end of shield support ring.

Bring the shield sock from backshell and completely cover the pigtails and support ring. Trim and fold the braid as shown in Figure 2. Lace tie the shield adjacent to support ring ends.

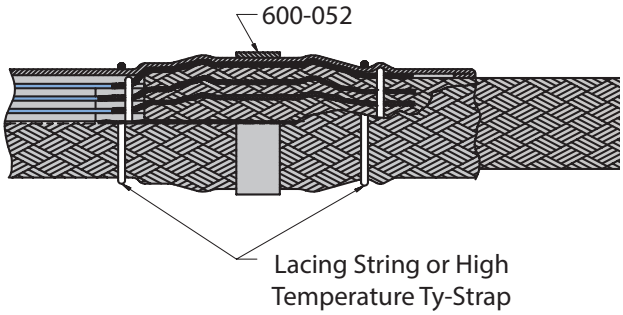

Figure 2

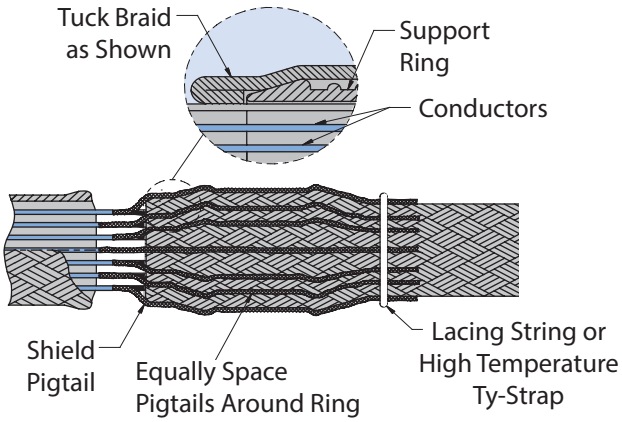

Figure 3

MIL-DTL-38999 Series I Type
Composite Swing-Arm® strain relief assembly procedure

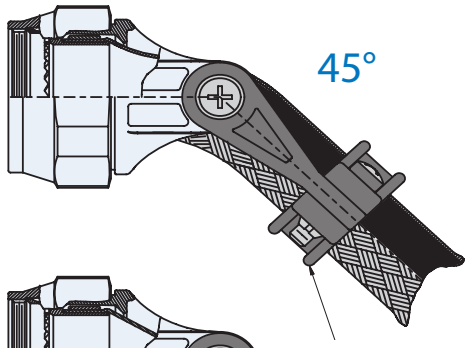

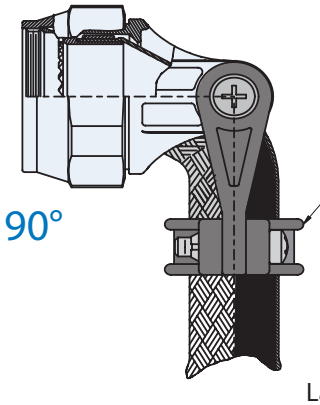

Caution:
Loosen saddle clamps to allow free cable movement before adjusting clamp to angular positions. Form the cable into the desired configuration, then tighten arms and secure the saddle clamps.

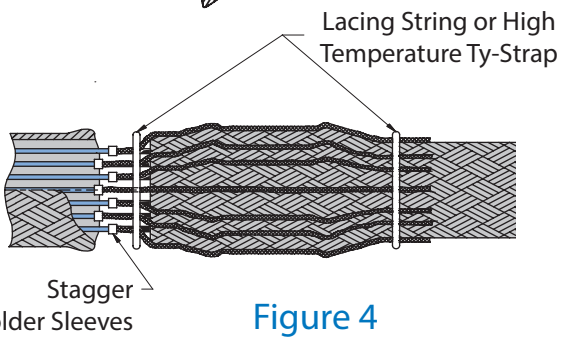

Figure 4

Install Glenair's Band-Master ATS® band between the lace ties onto the center of the support ring as shown in Figure 2. The Band-Master ATS® hand banding tool (601-100) or pneumatic banding tool (601-104) is used for this banding process.

Next, you can wrap the shield support ring assembly with high temperature tape. Place lacing cord, high-temperature tape, or high-temperature plastic Ty-Straps on the braid transition to the rear of the backshell to secure the overbraid on wire bundle. If you wish, you can cover the overbraid with 102-080 braid sock.

Tighten the adapter to the connector using Glenair 600-091 composite hex coupling torque wrench and related tooling accessories to established torque values. Secure the strain relief saddle onto the wire bundle using TG69 soft jaw pliers. Torque the saddle screws to established values. You can use Fluoropolymer tape wrap or M85049/127 bushing strip as needed to cushion the braid sock under the saddle clamps.

With these few steps, your Swing-Arm strain relief installation is complete!

687-749 BANDING SPLIT-RING

HOW TO ORDER				
Sample Part Number		**687-749**	**XB**	**16**
Basic Part Number	**687-749**			
Finish	**XB** = No Plating (Black Color)			
Dash Number				

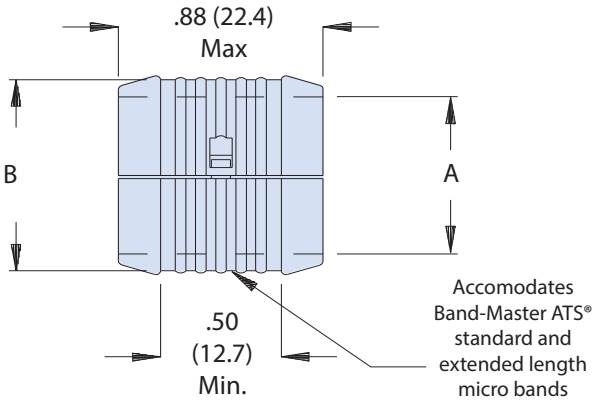

DASH NUMBER		
Dash No.	A Ø ±.03 (0.8)	B Ø ±.03 (0.8)
04	.25 (6.4)	.36 (9.1)
06	.38 (9.7)	.49 (12.4)
08	.50 (12.7)	.61 (15.5)
10	.63 (16.0)	.74 (18.8)
12	.75 (19.1)	.86 (21.8)
14	.88 (22.4)	.99 (25.1)
16	1.00 (25.4)	1.10 (27.9)
18	1.13 (28.7)	1.24 (31.5)
20	1.25 (31.8)	1.36 (34.5)
22	1.38 (35.1)	1.49 (37.8)
24	1.50 (38.1)	1.61 (40.9)
26	1.63 (41.4)	1.74 (44.2)
28	1.75 (44.5)	1.86 (47.2)

Band-Master ATS®

For Band-Master ATS® banding tools, bands, and accessories, see page J-11 of this catalog, or visit **glenair.com**

 © 2025 Glenair, Inc • 1211 Air Way, Glendale, CA 91201 • 818-247-6000 • www.glenair.com • U.S. CAGE code 06324 •
SuperNine MIL-DTL-38999 Series I Type · Dimensions in Inches (millimeters) are subject to change without notice.

MIL-DTL-38999 Series I Type
470-013 StarShield™ EMI/RFI shield termination backshell

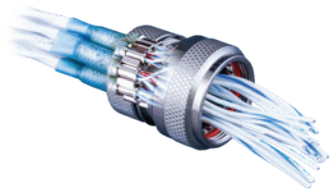

FEATURES

- StarShield™ backshell eliminates "standing antenna" problems common with pigtail shield termination systems.
- Utilizes familiar heat shrink termination (HST) sleeve technology.
- Tapered split-ring fits snugly into conically machined backshell or a lightweight band-terminated compression system adapter.
- Available end-fittings include compression nut, conduit adapter, or gland nut.
- Environmental sealing, self-locking coupling nuts standard.
- Optional shrink boots.

How to Order

Sample Part Number	470FS103	NF	6	G	DS	T
Finish Code	See Table II					
Order Number	See Table I					
Ferrule Quantity Code	See Table I					
Rear End Options	**B** = Compression Nut with Band **C** = Conduit Adapter **G** = Gland Nut					
Drilled Star	**DS** = Drilled Star - Optional Omit if Not Required (See Note 4)					
Shrink Boot	**T** = Shrink Boot - Optional (Omit for None) (See Table III)					

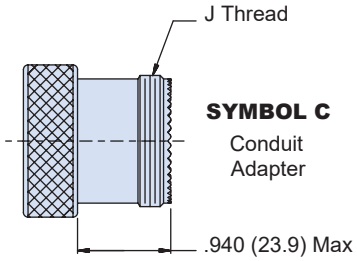

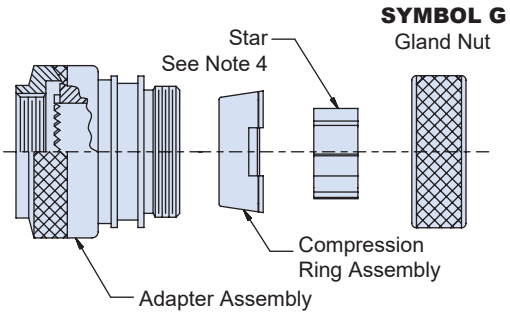

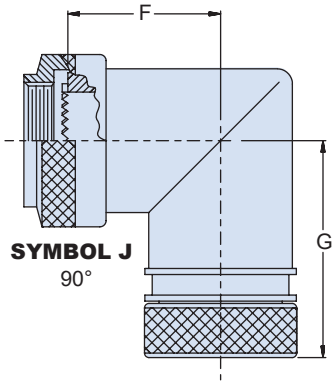

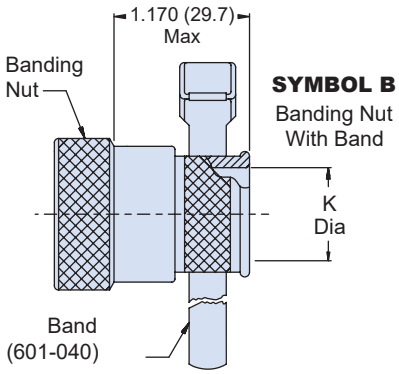

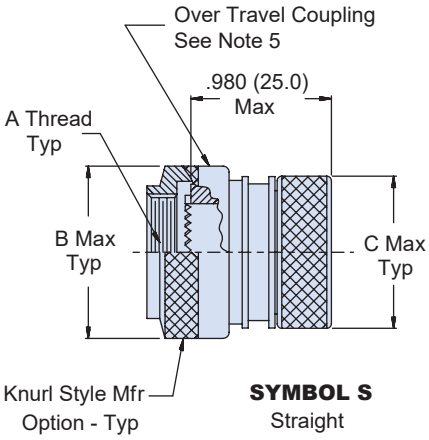

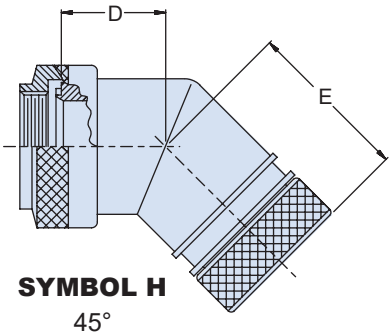

MIL-DTL-38999 Series I Type
470-013 StarShield™ EMI/RFI shield termination backshell

TABLE I: DIMENSIONS

Order No.	Connector Shell Size		A Thread Class 2 B	B Dia Max	C Dia Max	D Max
	MIL-DTL-38999 Series II	MIL-DTL-38999 Series I				
08	8	09	7/16-28 UNEF	.750 (19.0)	.690 (17.5)	.490 (12.5)
10	10	11	9/16-24 UNEF	.870 (22.0)	.850 (21.5)	.510 (13.0)
12	12	13	11/16-24 UNEF	1.000 (25.4)	.890 (22.5)	.550 (14.0)
14	14	15	13/16-20 UNEF	1.120 (30.5)	1.000 (25.4)	.570 (14.5)
16	16	17	15/16-20 UNEF	1.320 (33.5)	1.120 (28.5)	.590 (15.0)
18	18	19	1 1/16-18 UNEF	1.460 (37.0)	1.240 (31.5)	.610 (15.5)
20	20	21	1 3/16-18 UNEF	1.520 (38.5)	1.380 (35.0)	.650 (16.5)
22	22	23	1 5/16-18 UNEF	1.650 (42.0)	1.500 (38.0)	.670 (17.0)
24	24	25	1 7/16-18 UNEF	1.830 (46.5)	1.610 (41.0)	.710 (18.0)

TABLE I: DIMENSIONS (CONTINUED)

Order No.	E Max	F Max	G Max	J Thread Class 2 A	K ± .004 (.10)	Ferrule Quantity (See Note 4)	
						Std.	Opt.
08	1.000 (25.4)	.630 (16.0)	1.140 (29.0)	7/16-28 UNEF	.315 (8.00)	1	-
10	1.020 (26.0)	.690 (17.5)	1.200 (30.5)	9/16-24 UNEF	.531 (13.5)	2	-
12	1.040 (26.5)	.750 (19.0)	1.260 (32.0)	11/16-20 UNEF	.591 (15.0)	3	-
14	1.080 (27.5)	.810 (20.5)	1.320 (33.5)	13/16-24 UNEF	.709 (18.0)	5	-
16	1.100 ((28.0)	.870 (22.0)	1.380 (35.0)	15/16-20 UNEF	.827 (21.0)	6	7
18	1.120 (28.5)	.930 (23.5)	1.440 (36.5)	1 1/16-18 UNEF	.945 (24.0)	7	-
20	1.140 (29.0)	1.000 (25.4)	1.520 (38.5)	1 3/16-18 UNEF	1.063 (27.0)	9	11
22	1.180 (30.0)	1.060 (27.0)	1.570 (40.0)	1 5/16-18 UNEF	1.181 (30.0)	10	13
24	1.220 (31.0)	1.120 (28.5)	1.630 (41.5)	1 7/16-18 UNEF	1.299 (33.0)	12	17

TABLE II: MATERIAL AND FINISH OPTIONS

Code	Material; Finish Description
M	Aluminum; electroless nickel
MT	Aluminum; nickel - PTFE
NF	Aluminum; CAD/O. D. over electroless nickel
ZN	Aluminum; zinc nickel/O. D. over electroless nickel
ZR	Aluminum; zinc nickel/black over electroless nickel (RoHS)
ZRC	Aluminum; zinc nickel over electroless nickel (RoHS)
Z1	Stainless steel; passivate
ZM	Stainless steel; electroless nickel

TABLE III: SHRINK BOOT

Shell Size	Shrink Boot Part Number
09	770-001S1 04
11	770-001S1 06
13	770-001S1 06
15	770-001S1 07
17	770-001S1 07
19	770-001S1 08
21	770-001S1 08
23	770-001S1 08
25	770-001S1 09

Material/Finish	
Backshell, elbows, coupling and gland nut, compression ring and star	**Aluminum alloy or CRES/Table II**
Band	CRES/Passivate

NOTES:

1. Assembly identified with manufacturer's name, part number and date code, space permitting.
2. For effective grounding, connector with conductive finish should be used.
3. Glenair 600 Series Backshell Assembly Tools are recommended for assembly and installation.
4. Star not supplied with Order Number 09. Drilled star is available on order numbers 15-25 only. If optional ferrule quantity per Table I is selected, one split and one solid star will be supplied.
5. Over-travel coupling design provides self-seating and self-locking functionality, eliminating lock-wire requirements.
6. Ferrule kit sold separately.
   687-764 ferrule and HST device kit
   687-809 ferrule and sealing device kit
   687-748 solder ferrule
   687-841-01 HST flex device

© 2025 Glenair, Inc • 1211 Air Way, Glendale, CA 91201 • 818-247-6000 • www.glenair.com • U.S. CAGE code 06324 •
SuperNine MIL-DTL-38999 Series I Type · Dimensions in Inches (millimeters) are subject to change without notice.

MIL-DTL-38999 Series I Type
770-003S Lipped, straight shrink boots, without eyelet

FEATURES

- Lipped, straight shrink boots, no eyelet, provide mechanical and environmental protection from damage and debris.
- Standard boots are available in eight material options with five adhesive choices.
- Glenair straight boots fit SuperNine series connectors with integral band/boot platforms and compatible backshell adapters.
- All adhesive lined and unlined shrink books are RoHS compliant. Shrink boots are water-tight when equipped with factory installed or user-installed adhesive.
- Lipped boots lock into boot groove located on adapter and can be ordered with potting holes or drain holes according to your requirements.
- Choose boot size based on adapter diameter and cable diameter.

NOTES

1. See **Modification Codes** listed in Section A for material color options available for **Type 1 (compound 2025)** material.

How to Order

Sample Part Number	770	-003	S	1	03	W1	-PP
Product Series	**770** = Series 77 shrink boot						
Basic Number	**003** = lipped boot						
Angular Function	**S** = straight						
Material	See material and adhesives table						
Boot Size	**00S, 00, 01, 02, 03, 04, 05, 06, 07, 08, 09, 10, 11, 12**; see shell size cross reference in dimensions table						
Adhesive Lined	**Omit** for no adhesive; see material and adhesives table						
Potting Ports or Drain Holes	**PP** = potting port **DH** = drain hole **Omit** for none						

Material and Adhesive Compatibility

Material Code	Material Description (Compound No.)	Hot Melt Adhesives			High Performance Epoxy Adhesives	
		W1	W2	W3 (TACOM approved)	R	U
		High Temperature -55°C to 125°C	Standard -55°C to 70°C	Elastomeric -55°C to 125°C	Pre-Coat -75°C to 150°C	Two-Part -75°C to 155°C
1	High-Performance Semi-Rigid Elastomer (2025)	●	●		●	Type U epoxy adhesive is compatible with all boot materials. Ordered separately, user-installed (779-001). Order boot with no adhesive lining.
2	Zero Halogen Semi-Rigid Polyolefin (2010)	●	●		●	
3	General Purpose Flexible Polyolefin (2040)		●			
5	Viton Fluoroelastomer Blend (2050)	●		●	●	
6	High Performance Elastomer Alloy (2051)	●		●		
7	Semi-Rigid Polyolefin (2071)	●	●			
8	Low Outgassing Fluoropolymer Alloy (2008)	Material Type 8 not available with pre-coat adhesive. Use Type U two-part epoxy				
9	Low Temp Flexible Polyolefin (2013)		●			

MIL-DTL-38999 Series I Type
770-003S Lipped, straight shrink boots, without eyelet

Lipped Straight Adapter Shrink Boots, Standard: Dimensions

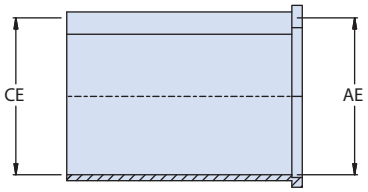

AS SUPPLIED

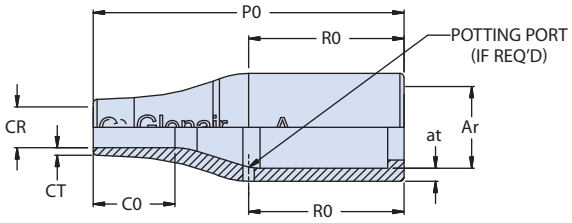

RECOVERED (-003)

770-003 Dimensions Table												
Boot Size	Glenair Us Part Marking	AS85049 /140 Ref	Shell Size	Ae DIA MIN	Ce DIA MIN	Ar DIA MAX	at ±30%	Cr DIA MAX	ct ±20%	CO REF	PO ±10%	RO REF
00S	00S		5	.354 (9.0)	.354 (9.0)	.217 (5.5)	.039 (1.0)	.079 (2.0)	.028 (0.7)	.295 (7.5)	.630 Max (16)	.385 (9.8)
00	S00		5	.354 (9.0)	.354 (9.0)	.217 (5.5)	.039 (1.0)	.079 (2.0)	.028 (0.7)	.295 (7.5)	.984 (25.0)	.551 (14.0)
01	S01		5,6	.472 (12.0)	.472 (12.0)	.276 (7.0)	.043 (1.1)	.118 (3.0)	.028 (0.7)	.295 (7.5)	.984 (25.0)	.551 (14.0)
02	S02		6,7	.669 (17.0)	.669 (17.0)	.276 (7.0)	.051 (1.3)	.138 (3.5)	.028 (0.7)	.394 (10.0)	1.181 (30.0)	.728 (18.5)
03	S03	01	8,10	.945 (24.0)	.945 (24.0)	.413 (10.5)	.063 (1.6)	.197 (5.0)	.035 (0.9)	.394 (10.0)	1.496 (38.0)	.748 (19.0)
04	S04	02	11-16	1.181 (30.0)	1.181 (30.0)	.551 (14.0)	.071 (1.8)	.236 (6.0)	.039 (1.0)	.630 (16.0)	2.165 (55.0)	1.181 (30.0)
05	S05	03	16-17	1.260 (32.0)	1.260 (32.0)	.709 (18.0)	.071 (1.8)	.276 (7.0)	.047 (1.2)	.748 (19.0)	2.638 (67.0)	1.299 (33.0)
06	S06	04	17-21	1.417 (36.0)	1.417 (36.0)	.866 (22.0)	.079 (2.0)	.335 (8.5)	.047 (1.2)	.787 (20.0)	3.150 (80.0)	1.575 (40.0)
07	S07	05	21-23	1.693 (43.0)	1.693 (43.0)	1.102 (28.0)	.087 (2.2)	.394 (10.0)	.051 (1.3)	1.142 (29.0)	3.898 (99.0)	2.165 (55.0)
08	S08	06	25	2.362 (60.0)	2.362 (60.0)	1.378 (35.0)	.130 (3.3)	.591 (15.0)	.063 (1.6)	1.575 (40.0)	5.118 (130.0)	1.969 (50.0)
09	S09	07		2.599 (66.0)	2.599 (66.0)	1.752 (44.5)	.150 (3.8)	.661 (16.8)	.079 (2.0)	2.283 (58.0)	6.693 (170.0)	3.543 (90.0)
10	S10	08		3.400 (86.4)	3.400 (86.4)	2.250 (57.2)	.160 (4.1)	1.06 (26.9)	.130 (3.3)	2.068 (52.5)	7.700 (195.6)	4.005 (102.0)
11	S11		5,6	.472 (12.0)	.472 (12.0)	.276 (7.0)	.043 (1.1)	.093 (2.4)	.028 (0.7)	.354 (9.0)	1.417 (36.0)	.750 (19.1)
12	S12		6,7	.669 (17.0)	.669 (17.0)	.375 (9.5)	.051 (1.3)	.187 (4.7)	.028 (0.7)	.394 (10.0)	1.496 (38.0)	.750 (19.1)

For materials Type 2, Type 3 and Type 9, dimension 'Ce' is nominal

Lipped Straight Shrink Boots: Part Marking, Raised Lettering

EXPANDED

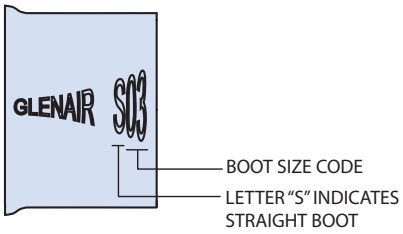

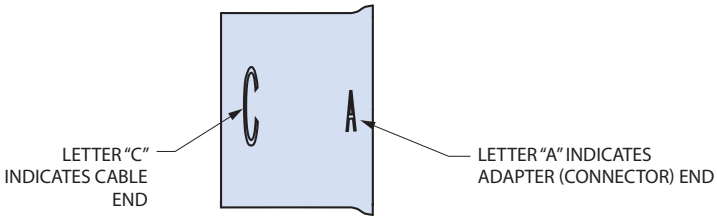

RECOVERED

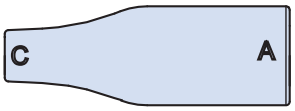

© 2025 Glenair, Inc • 1211 Air Way, Glendale, CA 91201 • 818-247-6000 • www.glenair.com • U.S. CAGE code 06324 •
SuperNine MIL-DTL-38999 Series I Type · Dimensions in Inches (millimeters) are subject to change without notice.

MIL-DTL-38999 Series I Type
770-001S Lipped, straight shrink boot, with eyelet

FEATURES

- Lipped, straight shrink boots, with eyelet, provide mechanical and environmental protection from damage and debris.
- Standard boots are available in eight material options with five adhesive choices.
- Glenair straight boots fit SuperNine series connectors with integral band/boot platforms and compatible backshell adapters.
- All adhesive lined and unlined shrink books are RoHS compliant. Shrink boots are water-tight when equipped with factory installed or user-installed adhesive.
- Lipped boots lock into boot groove located on adapter and can be ordered with potting holes or drain holes according to your requirements.
- Choose boot size based on adapter diameter and cable diameter.

NOTES

1. See **Modification Codes** listed in Section A for material color options available for **Type 1 (compound 2025)** material.

How to Order

Sample Part Number	770	-001	S	1	03	W1	-PP
Product Series	**770** = Series 77 shrink boot						
Basic Number	**001** = lipped boot with eyelet						
Angular Function	**S** = straight						
Material	See material and adhesives table						
Boot Size	**03**, **04**, **05**, **06**, **07**, **08**, **09**; see dimensions table						
Adhesive Lined	**Omit** for none; see material and adhesives table						
Potting Ports	**PP** = potting port **Omit** for none						

Material and Adhesive Compatibility

Material Code	Material Description (Compound No.)	Hot Melt Adhesives			High Performance Epoxy Adhesives	
		W1 High Temperature -55°C to 125°C	**W2** Standard -55°C to 70°C	**W3** (TACOM approved) Elastomeric -55°C to 125°C	**R** Pre-Coat -75°C to 150°C	**U** Two-Part -75°C to 155°C
1	High-Performance Semi-Rigid Elastomer (2025)	●	●		●	Type U epoxy adhesive is compatible with all boot materials. Ordered separately, user-installed (779-001). Order boot with no adhesive lining.
2	Zero Halogen Semi-Rigid Polyolefin (2010)	●	●		●	
3	General Purpose Flexible Polyolefin (2040)		●			
5	Viton Fluoroelastomer Blend (2050)	●		●	●	
6	High Performance Elastomer Alloy (2051)	●		●		
7	Semi-Rigid Polyolefin (2071)	●	●			
8	Low Outgassing Fluoropolymer Alloy (2008)	Material Type 8 not available with pre-coat adhesive. Use Type U two-part epoxy				
9	Low Temp Flexible Polyolefin (2013)		●			

MIL-DTL-38999 Series I Type
770-001S Lipped, straight shrink boot, with eyelet

Lipped Straight Adapter Shrink Boots, Standard: Dimensions

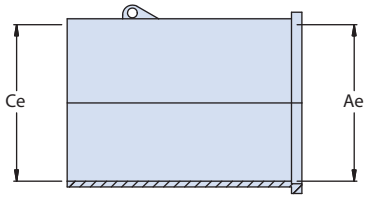

AS SUPPLIED

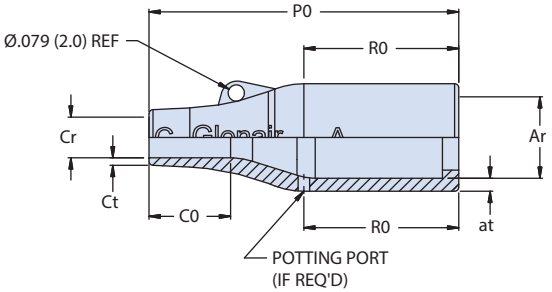

RECOVERED (-001)

Dimensions Table												
Boot Size	Glenair US Part Marking	Shell Size	Ae Dia Min	Ce Dia Min	Ar Dia Max	at ±30%	Cr Dia Max	ct ±20%	CO Ref	PO ±10%	RO Ref
03	S03	8,10	.945 (24.0)	.945 (24.0)	.413 (10.5)	.063 (1.6)	.197 (5.0)	.035 (0.9)	.394 (10.0)	1.496 (38.0)	.748 (19.0)
04	S04	11-16	1.181 (30.0)	1.181 (30.0)	.551 (14.0)	.071 (1.8)	.236 (6.0)	.039 (1.0)	.630 (16.0)	2.165 (55.0)	1.181 (30.0)
05	S05	16-17	1.260 (32.0)	1.260 (32.0)	.709 (18.0)	.071 (1.8)	.276 (7.0)	.047 (1.2)	.748 (19.0)	2.638 (67.0)	1.299 (33.0)
06	S06	17-21	1.417 (36.0)	1.417 (36.0)	.866 (22.0)	.079 (2.0)	.335 (8.5)	.047 (1.2)	.787 (20.0)	3.150 (80.0)	1.575 (40.0)
07	S07	21-23	1.693 (43.0)	1.693 (43.0)	1.102 (28.0)	.087 (2.2)	.394 (10.0)	.051 (1.3)	1.142 (29.0)	3.898 (99.0)	2.165 (55.0)
08	S08	25	2.362 (60.0)	2.362 (60.0)	1.378 (35.0)	.130 (3.3)	.591 (15.0)	.063 (1.6)	1.575 (40.0)	5.118 (130.0)	1.969 (50.0)
09	S09		2.599 (66.0)	2.599 (66.0)	1.752 (44.5)	.150 (3.8)	.661 (16.8)	.079 (2.0)	2.283 (58.0)	6.693 (170.0)	3.543 (90.0)

For materials Type 2, Type 3 and Type 9, dimension 'Ce' is nominal

Lipped Straight Shrink Boots: Part Marking, Raised Lettering

EXPANDED

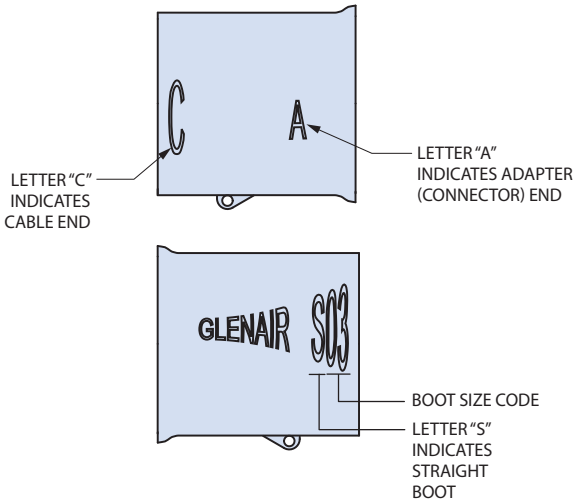

RECOVERED

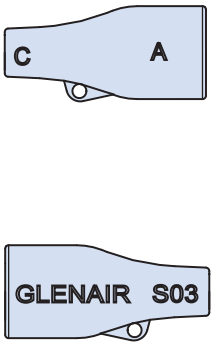

© 2025 Glenair, Inc • 1211 Air Way, Glendale, CA 91201 • 818-247-6000 • www.glenair.com • U.S. CAGE code 06324 •
SuperNine MIL-DTL-38999 Series I Type · Dimensions in Inches (millimeters) are subject to change without notice.

MIL-DTL-38999 Series I Type
770-004S Lipped, short straight shrink boot, without eyelet

FEATURES

- Lipped, short, straight shrink boots, no eyelet, provide mechanical and environmental protection from damage and debris.
- Standard boots are available in eight material options with five adhesive choices.
- Glenair straight boots fit SuperNine series connectors with integral band/boot platforms and compatible backshell adapters.
- All adhesive lined and unlined shrink books are RoHS compliant. Shrink boots are water-tight when equipped with factory installed or user-installed adhesive.
- Lipped boots lock into boot groove located on adapter and can be ordered with potting holes or drain holes according to your requirements.
- Choose boot size based on adapter diameter and cable diameter.

NOTES

1. See **Modification Codes** listed in Section A for material color options available for **Type 1 (compound 2025)** material.

How to Order

Sample Part Number	770	-004	S	1	03	W1	-PP

Product Series	**770** = Series 77 shrink boot
Basic Number	**004** = short lipped boot
Angular Function	**S** = straight
Material	See material and adhesives table
Boot Size	**03**, **04**, **05**, **06**, **07**, **08**, **09**; see shell size in dimensions table
Adhesive Lined	**Omit** for no adhesive; see material and adhesives table
Potting Ports or Drain Holes	**PP** = potting port **DH** = drain hole **Omit** for none

Material and Adhesive Compatibility

Material Code	Material Description (Compound No.)	Hot Melt Adhesives			High Performance Epoxy Adhesives	
		W1	W2	W3 (TACOM approved)	R	U
		High Temperature -55°C to 125°C	Standard -55°C to 70°C	Elastomeric -55°C to 125°C	Pre-Coat -75°C to 150°C	Two-Part -75°C to 155°C
1	High-Performance Semi-Rigid Elastomer (2025)	●	●		●	Type U epoxy adhesive is compatible with all boot materials. Ordered separately, user-installed (779-001). Order boot with no adhesive lining.
2	Zero Halogen Semi-Rigid Polyolefin (2010)	●	●		●	
3	General Purpose Flexible Polyolefin (2040)		●			
5	Viton Fluoroelastomer Blend (2050)	●		●	●	
6	High Performance Elastomer Alloy (2051)	●		●		
7	Semi-Rigid Polyolefin (2071)	●	●			
8	Low Outgassing Fluoropolymer Alloy (2008)	Material Type 8 not available with pre-coat adhesive. Use Type U two-part epoxy				
9	Low Temp Flexible Polyolefin (2013)		●			

MIL-DTL-38999 Series I Type
770-004S Lipped, short straight shrink boot, without eyelet

Lipped Straight Adapter Shrink Boots, Short: Dimensions

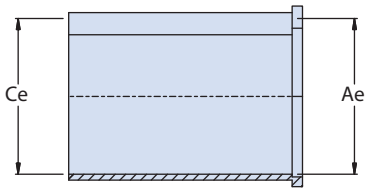

AS SUPPLIED

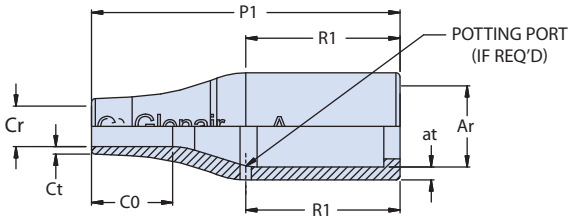

RECOVERED (-004)

Dimensions Table											
Boot Size	Glenair Us Part Marking	Shell Size	Ae DIA MIN	Ce DIA MIN	Ar DIA MAX	at ±30%	Cr DIA MAX	ct ±20%	CO REF	P1 ±10%	R1 REF
03	S03	8,10	.945 (24.0)	.945 (24.0)	.413 (10.5)	.063 (1.6)	.197 (5.0)	.035 (0.9)	.394 (10.0)	1.024 (26.0)	.276 (7.0)
04	S04	11-16	1.181 (30.0)	1.181 (30.0)	.551 (14.0)	.071 (1.8)	.236 (6.0)	.039 (1.0)	.630 (16.0)	1.693 (43.0)	.709 (18.0)
05	S05	16-17	1.260 (32.0)	1.260 (32.0)	.709 (18.0)	.071 (1.8)	.276 (7.0)	.047 (1.2)	.748 (19.0)	1.850 (47.0)	.512 (13.0)
06	S06	17-21	1.417 (36.0)	1.417 (36.0)	.866 (22.0)	.079 (2.0)	.335 (8.5)	.047 (1.2)	.787 (20.0)	2.362 (60.0)	.787 (20.0)
07	S07	21-23	1.693 (43.0)	1.693 (43.0)	1.102 (28.0)	.087 (2.2)	.394 (10.0)	.051 (1.3)	1.142 (29.0)	3.150 (80.0)	1.417 (36.0)
08	S08	25	2.362 (60.0)	2.362 (60.0)	1.378 (35.0)	.130 (3.3)	.591 (15.0)	.063 (1.6)	1.575 (40.0)	4.331 (110.0)	1.181 (30.0)
09	S09		2.599 (66.0)	2.599 (66.0)	1.752 (44.5)	.150 (3.8)	.661 (16.8)	.079 (2.0)	2.283 (58.0)	5.910 (150.0)	2.760 (70.0)

For materials Type 2, Type 3 and Type 9, dimension 'Ce' is nominal

Lipped Straight Shrink Boots: Part Marking, Raised Lettering

EXPANDED

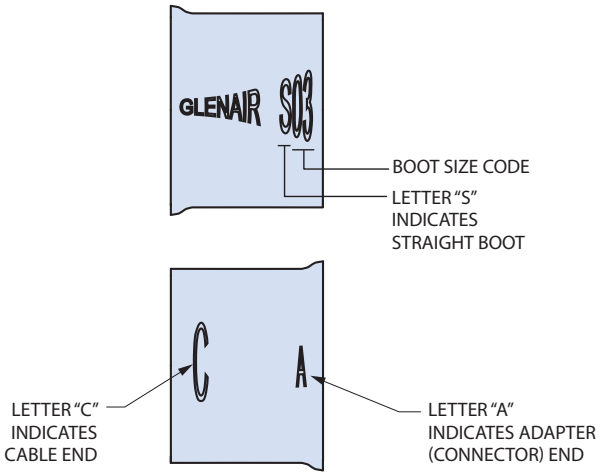

RECOVERED

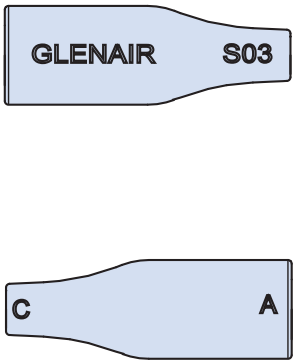

© 2025 Glenair, Inc • 1211 Air Way, Glendale, CA 91201 • 818-247-6000 • www.glenair.com • U.S. CAGE code 06324 •
SuperNine MIL-DTL-38999 Series I Type · Dimensions in Inches (millimeters) are subject to change without notice.

MIL-DTL-38999 Series I Type
770-005/-006 Autoshrink D cold-action boots, standard / short

How to Order

Sample Part Number	777	-005	S	0	03

Product Series	**777** = Autoshrink™
Basic Number	**005** = Lipped boot, no eyelet, Autoshrink™ D **006** = Short lipped boot, no eyelet, Autoshrink™ D
Angular Function	**S** = Straight
Color	See color table
Boot Size	See dimensions table

FEATURES

- Cold-action Autoshrink D shrink boots, no eyelet, provide mechanical and environmental protection from damage and debris.
- Lipped boots lock into boot groove located on adapter.
- Boots are made in accordance with AS85049 and available in short and standard lengths. Select short boots where space is a limited and a lower profile is required.
- Autoshrink™ D Boots are RoHS compliant, halogen free, and highly resistant to sunlight and ozone damage.
- Boots are water-tight when installed with 779-005 adhesive.
- Choose boot size based on adapter and cable diameter.
- 12 color choices available.
- Service temperature -65°C to 225°C

NOTES

1. Adhesive 779-005 sold separately
2. Number engraved on boot
3. Material:
   - Boot: Duralectric™ D

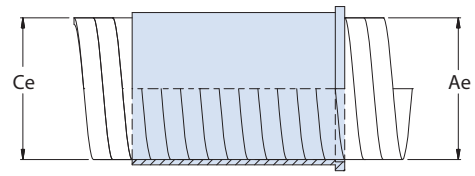

AS SUPPLIED

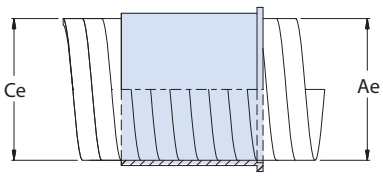

AS SUPPLIED

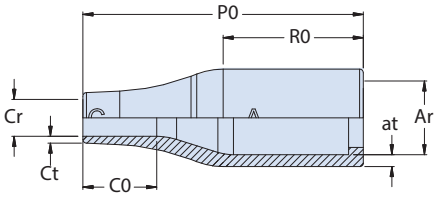

RECOVERED (-005)

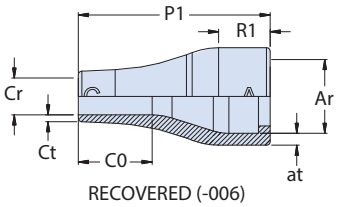

RECOVERED (-006)

Color Code	
Code	**Color**
0	Black
1	Brown
2	Red
3	Orange
4	Yellow
5	Green

Color Code	
Code	**Color**
6	Blue
7	Violet
8	Gray
9	White
DT	Desert Tan
OG	Dark Olive Green

Dimensions

BOOT SIZE	GLENAIR US PART MARKING[2]	AS85049 /140 REF	SHELL SIZE	Ae DIA MIN	Ce DIA MIN	Ar DIA MAX	at ±30%	Cr DIA MAX	ct ±20%	C0 REF	P0 ±10%	P1 ±10%	R0 REF	R1 REF
03	S03	01	8,10	.75(19.1)	.75(19.1)	.413(10.5)	.063(1.6)	.197(5.0)	.035(0.9)	.394(10.0)	1.496(38.0)	1.024(26.0)	.748(19.0)	.276(7.0)
04	S04	02	11-16	.75(19.1)	.75(19.1)	.551(14.0)	.071(1.8)	.236(6.0)	.039(1.0)	.630(16.0)	2.165(55.0)	1.693(43.0)	1.181(30.0)	.709(18.0)
05	S05	03	16-17	1.25(31.8)	1.25(31.8)	.709(18.0)	.071(1.8)	.276(7.0)	.047(1.2)	.748(19.0)	2.638(67.0)	1.850(47.0)	1.299(33.0)	.512(13.0)
06	S06	04	17-21	1.25(31.8)	1.25(31.8)	.866(22.0)	.079(2.0)	.335(8.5)	.047(1.2)	.787(20.0)	3.150(80.0)	2.362(60.0)	1.575(40.0)	.787(20.0)
07	S07	05	21-23	1.45(36.8)	1.45(36.8)	1.102(28.0)	.087(2.2)	.394(10.0)	.051(1.3)	1.142(29.0)	3.898(99.0)	3.150(80.0)	2.165(55.0)	1.417(36.0)
08	S08	06	25	2.25(57.2)	2.25(57.2)	1.378(35.0)	.130(3.3)	.591(15.0)	.063(1.6)	1.575(40.0)	5.118(130.0)	4.331(110.0)	1.969(50.0)	1.181(30.0)
09	S09	07		2.75(69.9)	2.75(69.9)	1.752(44.5)	.150(3.8)	.661(16.8)	.079(2.0)	2.283(58.0)	6.693(170.0)	5.910(150.0)	3.543(90.0)	2.760(70.0)
10	S10	08		4.00(101.6)	4.00(101.6)	2.250(57.2)	.160(4.1)	1.06(26.9)	.130(3.3)	2.068(52.5)	7.700(195.6)	N / A	4.005(102.0)	N / A

© 2025 Glenair, Inc • 1211 Air Way, Glendale, CA 91201 • 818-247-6000 • www.glenair.com • U.S. CAGE code 06324 •

MIL-DTL-38999 Series I Type
770-015 Autoshrink D cold-action boot, straight, lipless, no eyelet

FEATURES

- Cold-action Autoshrink D shrink boots, no eyelet, provide mechanical and environmental protection from damage and debris.
- Lipless boots install over connector adapter threads reducing overall length compared to connector and adapter combinations.
- Boots are made in accordance with AS85049 and available in straight, standard lengths only.
- Autoshrink™ D Boots are RoHS compliant, halogen free, and highly resistant to sunlight and ozone damage.
- Boots are water-tight when installed with 779-005 adhesive.
- Choose boot size based on adapter and cable diameter.
- 12 color choices available.
- Service temperature -65°C to 225°C

NOTES

1. Adhesive 779-005 sold separately
2. Number engraved on boot
3. Material:
   - Boot: Duralectric™ D

How to Order					
Sample Part Number	**777**	**-015**	**S**	**0**	**03**
Product Series	**777** = Autoshrink™				
Basic Number	**015** = Lipless boot, no eyelet, Autoshrink™ D				
Angular Function	**S** = Straight				
Color	See color table				
Boot Size	See dimensions table				

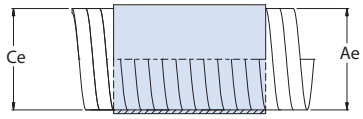

AS SUPPLIED

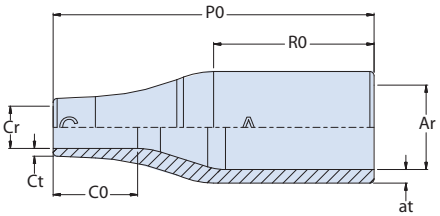

RECOVERED

Color Code	
Code	**Color**
0	Black
1	Brown
2	Red
3	Orange
4	Yellow
5	Green

Color Code	
Code	**Color**
6	Blue
7	Violet
8	Gray
9	White
DT	Desert Tan
OG	Dark Olive Green

Dimensions

BOOT SIZE	GLENAIR US PART MARKING[2]	SHELL SIZE	Ae DIA MIN	Ce DIA MIN	Ar DIA MAX	at ±30%	Cr DIA MAX	ct ±20%	C0 REF	P0 ±10%	R0 REF
03	S03	8,10	.75(19.1)	.75(19.1)	.413(10.5)	.063(1.6)	.197(5.0)	.035(0.9)	.394(10.0)	1.496(38.0)	.748(19.0)
04	S04	11-16	.75(19.1)	.75(19.1)	.551(14.0)	.071(1.8)	.236(6.0)	.039(1.0)	.630(16.0)	2.165(55.0)	1.181(30.0)
05	S05	16-17	1.25(31.8)	1.25(31.8)	.709(18.0)	.071(1.8)	.276(7.0)	.047(1.2)	.748(19.0)	2.638(67.0)	1.299(33.0)
06	S06	17-21	1.25(31.8)	1.25(31.8)	.866(22.0)	.079(2.0)	.335(8.5)	.047(1.2)	.787(20.0)	3.150(80.0)	1.575(40.0)
07	S07	21-23	1.45(36.8)	1.45(36.8)	1.102(28.0)	.087(2.2)	.394(10.0)	.051(1.3)	1.142(29.0)	3.898(99.0)	2.165(55.0)
08	S08	25	2.25(57.2)	2.25(57.2)	1.378(35.0)	.130(3.3)	.591(15.0)	.063(1.6)	1.575(40.0)	5.118(130.0)	1.969(50.0)
09	S09		2.75(69.9)	2.75(69.9)	1.752(44.5)	.150(3.8)	.661(16.8)	.079(2.0)	2.283(58.0)	6.693(170.0)	3.543(90.0)
10	S10		4.00(101.6)	4.00(101.6)	2.250(57.2)	.160(4.1)	1.06(26.9)	.130(3.3)	2.068(52.5)	7.700(195.6)	4.005(102.0)

© 2025 Glenair, Inc • 1211 Air Way, Glendale, CA 91201 • 818-247-6000 • www.glenair.com • U.S. CAGE code 06324 •
SuperNine MIL-DTL-38999 Series I Type · Dimensions in Inches (millimeters) are subject to change without notice.

MIL-DTL-38999 Series I Type
770-015 Autoshrink D cold-action boot, 90°, lipless, no eyelet

FEATURES

- Cold-action Autoshrink D shrink boots, no eyelet, provide mechanical and environmental protection from damage and debris.
- Lipless boots install over connector adapter threads reducing overall length compared to connector and adapter combinations.
- Boots are made in accordance with AS85049 and available in right-angle, standard lengths only.
- Autoshrink™ D Boots are RoHS compliant, halogen free, and highly resistant to sunlight and ozone damage.
- Boots are water-tight when installed with 779-005 adhesive.
- Choose boot size based on adapter and cable diameter.
- 12 color choices available.
- Service temperature -65°C to 225°C

How to Order					
Sample Part Number	**777**	**-015**	**A**	**0**	**03**
Product Series	**777** = Autoshrink™				
Basic Number	**015** = Lipless boot, no eyelet, Autoshrink™ D				
Angular Function	**A** = 90°				
Color	See color table				
Boot Size	See dimensions table				

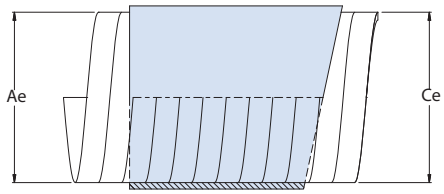

AS SUPPLIED

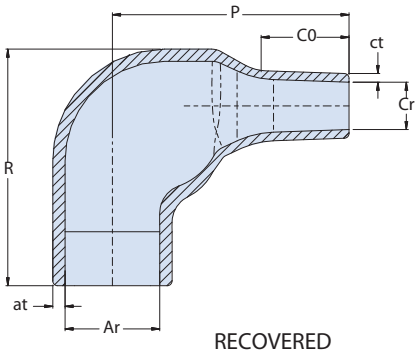

RECOVERED

NOTES

1. Adhesive 779-005 sold separately
2. Number engraved on boot
3. Material:
   - Boot: Duralectric™ D

Color Code		Color Code	
Code	Color	Code	Color
0	Black	6	Blue
1	Brown	7	Violet
2	Red	8	Gray
3	Orange	9	White
4	Yellow	DT	Desert Tan
5	Green	OG	Dark Olive Green

Dimensions

BOOT SIZE	GLENAIR US PART MARKING[2]	SHELL SIZE	Ae DIA MIN	Ce DIA MIN	Ar DIA MAX	at ±30%	Cr DIA MAX	ct ±20%	C0 REF	P ±20%	R REF
03	A03	9	.75(19.1)	.75(19.1)	.394(10.0)	.063(1.6)	.197(5.0)	.035(0.9)	.394(10.0)	.984 (25.0)	.984 (25.0)
04	A04	11-15	.75(19.1)	.75(19.1)	.532(13.5)	.071(1.8)	.217(5.5)	.039(1.0)	.742(18.8)	1.260 (32.0)	1.063 (27.0)
05	A05	13-17	1.25(31.8)	1.25(31.8)	.709(18.0)	.071(1.8)	.276(7.0)	.047(1.2)	.591(15.0)	1.535 (39.0)	1.260 (32.0)
06	A06	17-21	1.25(31.8)	1.25(31.8)	.886(22.5)	.079(2.0)	.335(8.5)	.047(1.2)	.630(16.0)	1.929 (49.0)	1.496 (38.0)
07	A07	21-23	1.45(36.8)	1.45(36.8)	1.102(28.0)	.087(2.2)	.394(10.0)	.059 (1.5)	.709(18.0)	2.165 (55.0)	1.850 (47.0)
08	A08	23-25	2.25(57.2)	2.25(57.2)	1.378(35.0)	.130(3.3)	.591(15.0)	.079 (2.0)	1.260(32.0)	3.150 (80.0)	2.165 (55.0)

© 2025 Glenair, Inc • 1211 Air Way, Glendale, CA 91201 • 818-247-6000 • www.glenair.com • U.S. CAGE code 06324 •

MIL-DTL-38999 Series I Type
600-117 Jam nut wrench for connectors

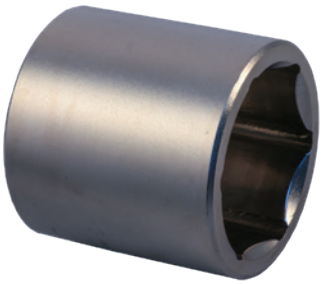

600-117

HOW TO ORDER		
Sample Part Number	**600-117**	**02**
Basic Part Number	Jam Nut Wrench for Connectors	
Dash No.	See Table I	

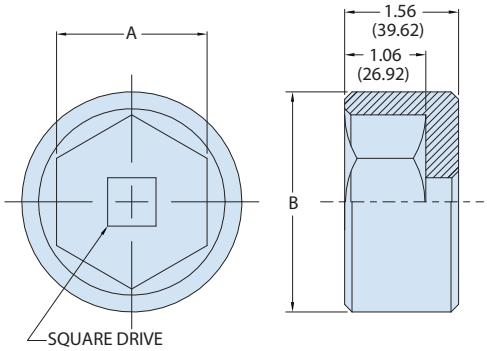

CONNECTOR FEATURES

- Material/Finish:
  Jam Nut Wrench - Steel/Nickel Plate

TABLE I

Dash No.	A Dim Fits Jam Nut Size: Inches	A Dim Fits Jam Nut Size: Millimeters	B DIA Ref	Square Drive	For Connector Shell Size (REF) MIL-DTL -38999 Series I
1	.693 to .717	17.60 to 18.21	1.04	1/4"	
2	.765 to .791	19.43 to 20.09	1.13	1/4"	
3	.818 to .845	20.77 to 21.46	1.19	1/4"	
4	.873 to .902	22.17 to 22.91	1.26	1/4"	9
5	.933 to .964	23.69 to 24.48	1.33	3/8"	
6	.996 to 1.030	25.29 to 26.16	1.41	3/8"	11
7	1.064 to 1.100	27.02 to 27.94	1.51	3/8"	
8	1.137 to 1.175	28.87 to 29.84	1.59	3/8"	
9	1.175 to 1.214	29.84 to 30.83	1.63	3/8"	13
10	1.297 to 1.340	32.94 to 34.03	1.78	3/8"	15
11	1.385 to 1.432	35.17 to 36.37	1.89	3/8"	
12	1.432 to 1.480	36.37 to 37.59	1.95	3/8"	17
13	1.529 to 1.580	38.83 to 40.13	2.06	3/8"	19
14	1.580 to 1.633	40.13 to 41.47	2.12	3/8"	
15	1.633 to 1.688	41.47 to 42.87	2.19	3/8"	
16	1.688 to 1.745	42.87 to 44.32	2.25	3/8"	21
17	1.803 to 1.864	45.79 to 47.34	2.39	3/8"	23
18	1.926 to 1.991	48.92 to 50.57	2.54	3/8"	
19	1.991 to 2.057	50.57 to 52.24	2.61	3/8"	25
20	2.126 to 2.197	54.00 to 55.80	2.78	3/8"	
21	2.197 to 2.271	55.80 to 57.68	2.87	3/8"	
22	2.347 to 2.426	59.61 to 61.62	3.04	3/8"	
23	2.507 to 2.591	63.67 to 65.81	3.24	3/8"	
24	2.678 to 2.769	68.02 to 70.33	3.44	3/8"	
25	2.956 to 3.055	75.08 to 77.59	3.77	3/8"	
26	3.180 to 3.280	80.77 to 83.31	4.04	3/8"	

© 2025 Glenair, Inc • 1211 Air Way, Glendale, CA 91201 • 818-247-6000 • www.glenair.com • U.S. CAGE code 06324 •
SuperNine MIL-DTL-38999 Series I Type · Dimensions in Inches (millimeters) are subject to change without notice.

MIL-DTL-38999 Series I Type
Quick selection guide

QUICK SELECTION GUIDE	
Description	**Page**
SuperNine Contact, Product Selection Guide	175
D38999 QPL Crimp Contacts and Commercial Crimp Contacts	176
Extended Durablity (1500 Cycle) D38999 QPL and Commercial Crimp Contacts	177
Extended Durability D38999 QPL and Commercial Equivalent Crimp Contacts	177
#8 High Power Contacts	177
Size #16 Coaxial Contacts	178
Size #12 Coaxial Contacts	179
Size #12, 75 Ohm Matched Impedance Coaxial Contacts	180
Size #8, 2.5 GHz Max Operating Frequency, 50 Ohm Contacts for Low Loss Coax Cable	182
Size #8, 3 GHz Max Operating Frequency, 50 Ohm Contacts for Coax Cable	184
Size #8, 4 GHz Max Frequency, 75 Ohm Low-Loss, Matched-Impedance Coax Contacts & Cable	186
Size #8 (50Ω and 75Ω) Coaxial Contacts	190
Size #8 Concentric Twinax Contacts	192
Size #8 Quadrax Contacts	199
Thermocouple Contacts	202
Size #12 Pneumatic Contacts	203
Size 8 Cavity Optoelectronic Contact	203
Crimp Contact Termination Instructions	204
Power and Signal Crimp Contact Tool Cross Reference	205
El Ochito® Octaxial "White," "Blue," and "Red" Contacts and Assembly Tools	210
600-280 El Ochito® Contact Termination/Installation Kit	214
Crimp Tools & Positioners	215
Contact Insertion and Extraction Tools	217
Contact Retention Tester for Size #23 Contacts	217
Dummy Contact Sealing Plugs (DCSP)	218
Sealing Plugs	219
Band-Master ATS® Banding Tool	223
600H005 Connector Holding Tool	224

Crimp Contacts

Banding Tool

Contact Termination/ Installation Kit

Contact Retention Tester

Crimp Tool

MIL-DTL-38999 Series I Type
M39029 and Glenair signature contact solutions

D38999 QPL AND SUPERNINE 233-205 AND 233-206 CONTACT QUICK REFERENCE GUIDE

D38999 QPL				
Size	Pin	Socket	Durability	Mil Spec Gender Designator
23	M39029/122-670	M39029/121-663	500	P or S
22	M39029/58-360	M39029/56-348	500	P or S
20	M39029/58-363	M39029/56-351	500	P or S
16	M39029/58-364	M39029/56-352	500	P or S
12	M39029/58-365	M39029/56-353	500	P or S

/18 and /17 are not used for D38999

Extended Durability D38999 QPL				
Size	Pin	Socket	Durability	Mil Spec Gender Designator
23	No Mil Spec Available	No Mil Spec Available	1500	N/A
22	M39029/107-620	M39029/106-614	1500	H or J
20	M39029/107-621	M39029/106-615	1500	H or J
16	M39029/107-622	M39029/106-616	1500	H or J
12	M39029/107-623	M39029/106-617	1500	H or J

SuperNine 233-205 and 233-206 Extended Durability Connector Contacts				
Size	Pin	Socket	Durability	Gender Designator
23	857-189	857-190	1500	P or S
22	857-151-22	857-150-22	1500	P or S
20	857-151-20	857-150-20	1500	P or S
16	857-151-16	857-150-16	1500	P or S
12	857-151-12	857-150-12	1500	P or S
22	M39029/107-620	M39029/106-614	1500	H or J
20	M39029/107-621	M39029/106-615	1500	H or J
16	M39029/107-622	M39029/106-616	1500	H or J
12	M39029/107-623	M39029/106-617	1500	H or J

D38999 QPL CRIMP CONTACTS (500 CYCLE)

How-To-Order D38999 QPL Qualified Crimp Contacts					
Mating End Size	Wire Accomodation	Pin Contacts		Socket Contacts	
		Military P/N.	Glenair P/N	Military P/N.	Glenair P/N
23	22 - 28 AWG*	M39029/122-670	850-319-23-670	M39029/121-663	850-318-23-663
22	22-28 AWG	M39029/58-360	850-002-22-360	M39029/56-348	850-001-22-348
20	20-24 AWG	M39029/58-363	850-002-20-363	M39029/56-351	850-001-20-351
16	16-20 AWG	M39029/58-364	850-002-16-364	M39029/56-352	850-001-16-352
12	12-14 AWG	M39029/58-365	850-002-12-365	M39029/56-353	850-001-12-353

*26-30 AWG accommodation is available for size 23, consult factory for details

MATERIAL AND FINISH

- Copper alloy, plated; meets AS39029 specifications.
- Rated to 500 cycles of durability for size 23 extended duty see P/N 857-189 and 857-190.

© 2025 Glenair, Inc • 1211 Air Way, Glendale, CA 91201 • 818-247-6000 • www.glenair.com • U.S. CAGE code 06324 •

MIL-DTL-38999 Series I Type
M39029 and Glenair signature contact solutions

EXTENDED DURABILITY (1500 CYCLE) D38999 QPL M39029/107 (850-007) H PIN CONTACT OPTION AND M39029/106 (850-006) J SOCKET CONTACT OPTION

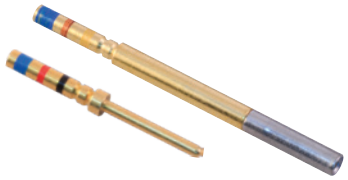

How-To-Order Extended Durability Crimp Contacts					
Mating End Size	Wire Accomodation	Pin Contacts Military Part No.	Pin Contacts Glenair Part No.	Socket Contacts Military Part No.	Socket Contacts Glenair Part No.
22	22-28 AWG	M39029/107-620	850-007-22-620	M39029/106-614	850-006-22-614
20	20-24 AWG	M39029/107-621	850-007-20-621	M39029/106-615	850-006-20-615
16	16-20 AWG	M39029/107-622	850-007-16-622	M39029/106-616	850-006-16-616
12	12-14 AWG	M39029/107-623	850-007-12-623	M39029/106-617	850-006-12-617

MATERIAL AND FINISH

- Copper alloy / gold plated; IAW ASTM B 488, Type II, Code C, .000005 min thickness, over palladium IAW ASTM B 679, .000045 min thickness, over nickel IAW SAE ASS-QQ-N290, Class 2, .000050 to .000100 thickness
- Rated to 1500 cycles of durability.
- Size 23 contacts not available for M39029/107, for size 23 extended duty crimp contacts, see part number 857-189 and 857-190.

COMMERCIAL, EXTENDED DURABILITY (1500 CYCLE) CONTACTS FOR SUPERNINE 233-205 AND 233-206 CONNECTORS; AVAILABLE FOR TYPE P AND S CRIMP CONTACT OPTIONS ONLY

How-To-Order Extended Durability Crimp Contacts			
Mating End Size	Wire Accomodation	Pin Contacts Glenair Part No.	Socket Contacts Glenair Part No.
23	22-28 AWG	857-189*	857-190*
22	22-28 AWG	857-151-22	857-150-22
20	20-24 AWG	857-151-20	857-150-20
16	16-20 AWG	857-151-16	857-150-16
12	12-14 AWG	857-151-12	857-150-12

* 857-189 and 857-190 are also used in high-density size 23 insert arrangements

MATERIAL AND FINISH

- Copper alloy, plated; meets AS39029 specifications.
- Rated to 1500 cycles of durability.
- Plated with 50 microinches gold per ASTM B488 Type II code C

#8 HIGH POWER CONTACTS

	How-To-Order #8 High Power Contacts		
Type	Mating End Size	Wire Accommodation	Glenair Part Number
Socket	8	8 AWG	850-013
Pin	8	8 AWG	850-014

MATERIAL AND FINISH

- Contact Body: Copper alloy, plated with 50 microinches gold per ASTM B488 Type II code C
- Hood: CRES, passivated
- 50–100 microinches nickel IAW SAE AMS-QQ-N-290, class II

SIZE #16 COAXIAL CONTACTS

These #16 contacts accept 50 ohm and 75 ohm coaxial cable. Inner contact is rated at 1 amp, the outer contact 12 amps. DWV rating is 800 Vac rms sea level, 250 Vac at 50,000 feet. Contacts are packaged individually and are unassembled with instruction sheet. One contact consists of outer contact , fluorocarbon dielectric, inner contact and shield crimp sleeve. Inner and outer contacts are gold-plated copper alloy. Approved to SAE AS39029. VSWR rating 1.5:1 maximum up to 700 MHz. 5000 megohm insulation resistance.

How-To-Order Size #16 Coaxial Contacts

Type	Cable Accommodation	Part Number	Military Part Number	Color Band		
				1st	2nd	3rd
Pin	M17/119-RG174, M17/113-RG316, M17/094-RG179, Times AA3248, Teledyne 11299, Haveg 8100207, Thermax 75-738-BCCWXE, Tensolite 3088/L707YX-1	852-008-16-424	M39029/76-424	Yellow	Red	Yellow
	M19/093-RG178	852-008-16-425	M39029/76-425	Yellow	Red	Green
Socket	M17/119-RG174, M17/113-RG316, M17/094-RG179, Times AA3248, Teledyne 11299, Haveg 8100207, Thermax 75-738-BCCWXE, Tensolite 30888/L707YX-1	852-009-16-428	M39029/77-428	Yellow	Red	Gray
	M17/093-RG178	852-009-16-429	M39029/77-429	Yellow	Red	White

MATERIAL AND FINISH

- Contact Body: Copper Alloy/Gold Plated
- Center Contact: Copper Alloy/Gold Plated
- Crimp Sleeve: Copper Alloy/Gold Plated
- Insulator: Teflon

© 2025 Glenair, Inc • 1211 Air Way, Glendale, CA 91201 • 818-247-6000 • www.glenair.com • U.S. CAGE code 06324 •

MIL-DTL-38999 Series I Type
M39029 and Glenair signature contact solutions

SIZE #12 COAXIAL CONTACTS

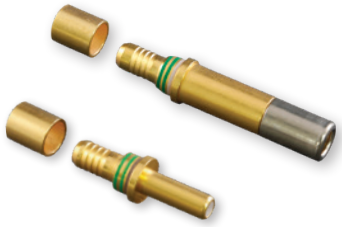

These #16 contacts accept 50 ohm and 75 ohm coaxial cable. Inner contact is rated at 1 amp, the outer contact 12 amps. DWV rating is 800 Vac rms sea level, 250 Vac at 50,000 feet. Contacts are packaged individually and are unassembled with instruction sheet. One contact consists of outer contact , fluorocarbon dielectric, inner contact and shield crimp sleeve. Inner and outer contacts are gold-plated copper alloy. Approved to SAE AS39029. VSWR rating 1.5:1 maximum up to 700 MHz. 5000 megohm insulation resistance.

MATERIAL AND FINISH

- Contact Body: Copper Alloy/Gold Plated
- Hood: Stainless Steel/Passivated
- Center Contact: Copper Alloy/Gold Plated
- Crimp Sleeve: Copper Alloy/Gold Plated
- Insulator: Teflon

How-To-Order Size #12 Coaxial Contacts

Type	Cable Accommodation	Part Number	Military Part Number	Color Band		
				1st	2nd	3rd
Pin	M17/113-RG316 M17/094-RG179	852-004-12-558	M39029/102-558	Green	Green	Gray
	M17/152-00001 (RG316DS)	852-016-02	N/A	N/A		
	M17/93-RG178	852-016-03	N/A	N/A		
	TFlex-405 or 086 equivalent	852-018	N/A	N/A		
Socket	M17/113-RG316 M17/094-RG179	852-005-12-559	M39029/102-558	Green	Green	White
	M17/152-00001 (RG316DS)	852-019-02	M39029/103-559	N/A		
	M17/93-RG178	852-019-03	N/A	N/A		
	TFlex-405 or 086 equivalent	852-037	N/A	N/A		

MIL-DTL-38999 Series I Type
M39029 and Glenair signature contact solutions

SIZE #12, 3 GHZ MAX OPERATING FREQUENCY, 75 OHM MATCHED IMPEDANCE COAXIAL CONTACTS

Pin Contact

Socket Contact

75 Ohm coax contacts provide DC – 3 GHz frequency range. Crimp termination. Supplied as unassembled kit with contact body, center contact and outer ferrule. Snap-in, rear-release contacts fit Series 80 Mighty Mouse connectors and Glenair MIL-DTL-38999 Series I, III, and IV connectors with size #12 cavities. Gold-plated copper alloy, fluoroplastic insulator.

TECHNICAL DATA

Specifications

- Operating temperature: -65°C. to +200°C.
- Dielectric withstanding voltage: 500 VRMS
- Current rating: 1 ampere
- VSWR: 1.25:1 max. @ 3 GHz
- Impedance: 75 Ohms nominal
- Durability: 500 mating cycles
- Shock: EIA-364-27 condition D
- Vibration: EIA-364-28 condition VI, letter J

Construction

- Center contact, body,crimp sleeve: copper alloy, 50 microinches gold over nickel plating
- Insulator: fluoroplastic
- Socket Hood: stainless steel, passivated

Size 12, 75 Ohm Matched-Impedance Coaxial Contacts

RG Cable	Pin Contact	Socket Contact	Assembly Instructions
RG179 (M17/94-RG179)	852-103-02	852-106-01	AI85075
V75268, V76261, V73263 (PIC™ Wire and Cable)	852-103-01	852-106-02	AI85024

Pin Contact 852-103-01, -02

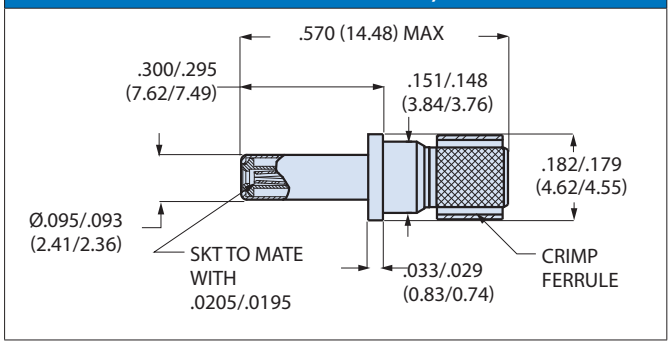

Socket Contact 852-106-01, -02

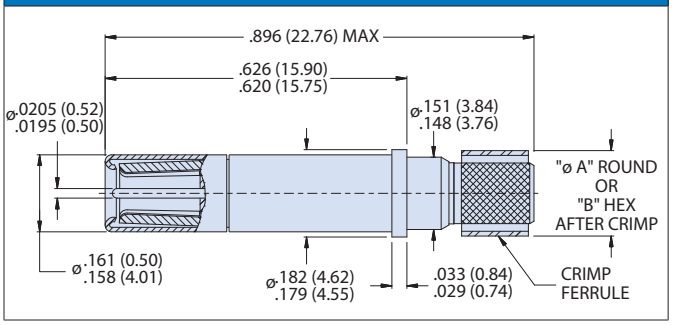

© 2025 Glenair, Inc • 1211 Air Way, Glendale, CA 91201 • 818-247-6000 • www.glenair.com • U.S. CAGE code 06324 •

MIL-DTL-38999 Series I Type
M39029 and Glenair signature contact solutions

SIZE #12, 3 GHZ MAX OPERATING FREQUENCY, 75 OHM MATCHED IMPEDANCE COAXIAL CONTACTS

Coax contacts 852-103 and 852-104 are designed for use with V75268, V76261, V73263 PIC wire and RG179. V75268 and V75261 coaxial cable can be used in cabin entertainment analog and digital video applications. V75263 cable is suitable for high-definition digital video and offers low VSWR and attenuation characteristics. Manufactured by PIC Wire, these cables are Skydrol resistant, RoHS compliant and meets the FAA flammability requirements of FAR Part 23 and 25, Appendix F; complies with MIL-C-17 as applicable

Glenair Part No.	960-130	960-131	960-132	N/A
Manufacturer Part No.	V75268	V76261	V73263	N/A
Military Part Number	N/A	N/A	N/A	RG179 (M17/94-RG179)
Manufacturer	PIC	PIC	PIC	MIL-SPEC
Impedance	75	75	75	75
Velocity of Propagation %	80.0	80.0	80.0	69.5
Capacitance (pF/ft)	16.0	16.0	16.0	23.0
Conductor Wire Size	AWG 26	AWG 26	AWG 26	.012 (0.30)
Conductor Type	Stranded SPC	Stranded SPC	Stranded SPC	Stranded SPC
Dielectric	Foamed Flouropolymer	Foamed Flouropolymer	Foamed Flouropolymer	Extruded PTFE
Shielding Effectiveness (dB)	-50 min	-90	-110	N/A
Outer Diameter	0.12 (3.10)	0.12 (3.10)	0.13 (3.18)	.100 (2.54)
Weight (lbs/100ft.)	1.3	1.1	1.5	.0108
Temperature Range	-55° to +150°C	-55° to +150°C	-55° to +150°C	-55° to +200°C
Frequency	Attenuation (dB/100 ft) nom/max			
135 MHz	5.9/6.5	5.8/6.4		
180 MHz	6.9/7.6	6.7/7.4		
270 MHz	8.6/9.5	8.3/9.1		
360 MHz	10.1/11.1	9.7/10.6		
400 MHz			10.2/11.3	21.0 nominal
750 MHz			14.2/15.7	
1.45 GHz		21.9/23.4	21.9/23.4	
1.5 GHz			20.6/22.7	
3.0 GHz		33.7/36.1	30.3/33.3	
6.0 GHz			44.9/49.5	

V76263

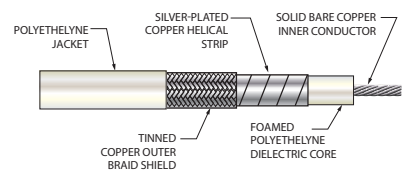

M17/94 RG179

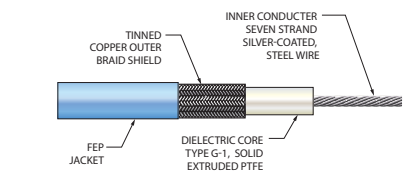

V75268

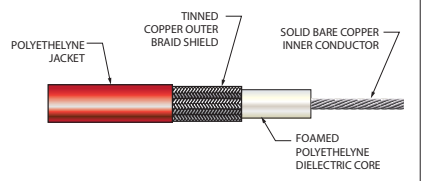

V75261

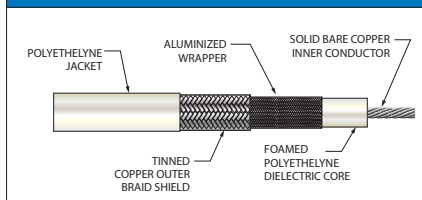

MIL-DTL-38999 Series I Type
M39029 and Glenair signature contact solutions

SIZE #8 50 OHM CONTACTS FOR LOW LOSS HIGH PERFORMANCE COAX CABLE

Pin Contact

Socket Contact

Fig.	Contact Type	Part Number Contact Only	Part Number Contact and Sealing Boot	Sealing Boot
Fig. 1	Pin	852-043	852-043F	859-042-02
Fig. 2	Socket	852-042	852-042F	859-042-02

Coax contacts fit Glenair Series 80 Mighty Mouse connectors and MIL-DTL-38999 Series I, III, and IV connectors with size 8 contact cavities. 50 Ohm nominal impedance. 0-2.5 GHz frequency range. Solder conductor to center contact, shield termination is crimp type. Supplied as unassembled kit with contact body, center contact, outer ferrule and sealing boot. Contacts are snap-in, rear release with plastic extraction tool. Gold-plated copper alloy, Fluoropolymer insulator. See following page for information on coaxial cable.

TECHNICAL DATA

Specifications

- Nominal Impedance: 50 Ohms
- Frequency Range: 0 – 2.5 GHz
- Dielectric Withstanding Voltage: 1300 VAC sea level, 250 VAC at 50,000 feet
- Insulation Resistance: 5000 megOhms minimum
- Durability: 500 mating cycles

Construction

- Center contact: copper alloy/ gold plated
- Body: copper alloy/ gold plated
- Ferrule: copper alloy/ gold plated
- Insulator: PTFE / N.A.

Materials, Finishes	
Contact body, center contact, ferrule	Copper Alloy
Contact finish	50 microinches gold over nickel plating
Dielectric	Fluorocarbon

Socket Contact 852-042F

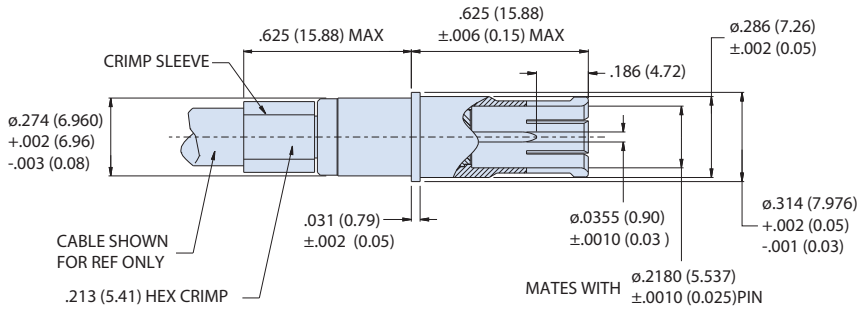

Pin Contact 852-043F

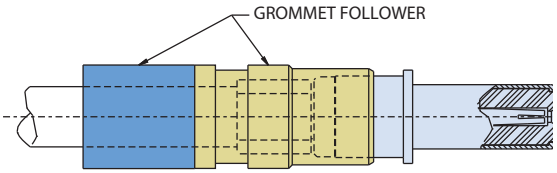

SHOWN WITH SEALING BOOT

Pin Contact 852-043

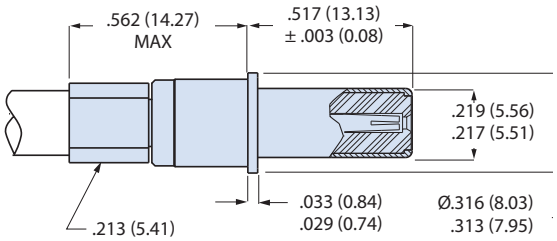

SHOWN WITHOUT SEALING BOOT

© 2025 Glenair, Inc • 1211 Air Way, Glendale, CA 91201 • 818-247-6000 • www.glenair.com • U.S. CAGE code 06324 •

SIZE #8 50 OHM CONTACTS FOR LOW LOSS HIGH PERFORMANCE COAX CABLE

LLSB-200 and LMR-195 Cable

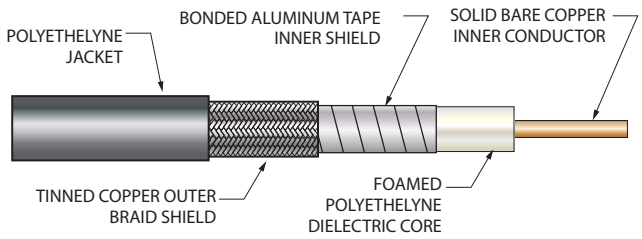

Coax contacts 852-042 and 852-043 are designed for use with LLSB-200 and LMR-195 cable (reference only, not sold by Glenair). This low loss, flexible cable is suitable for shipboard, airframe and tactical vehicles. Manufactured by Times Microwave, these cables are qualified to MIL-DTL-17/220. LMR-197 is a drop-in replacement for RG-58 and RG142 (TLMR is not QPL). Jacket is non-halogen, low smoke black UV resistant cross-linked polyethylene.

NOTE

1. 852-043 / -042 can be used / terminated on both cables
   LLSB-200 and LMR-195

Manufacturer Part No.	LLSB-200	LMR-195
Military Part Number	M17/220-00001	M17/ RG-58 or RG142
Impedance	50 ± 2	50
Velocity of Propagation %	80	80
Capacitance (pF/ft)	24.5	25.4
Conductor Type	Bare Copper	Bare Copper
Conductor Diameter	.044 (1.12)	.037 (.94)
Dielectric Diameter	.118 (3.0)	.110 (2.79)
Outer Shield Diameter	.144 (3.66)	.116 (2.95)
Shielding Effectiveness (dB)	90 min.	90 min
Outer Diameter	.195 (4.95)	.195 (4.95)
Temperature Range	-30° to +85°C	-40° to +85°Cw
Weight (lbs/ft.)	.037	.021
Attenuation (dB/100 ft)	nominal	
10 MHz	1.3	
30 MHz	2.1	2.0
50 MHz	2.7	2.5
100 MHz	3.8	
150 MHz		4.4
400 MHz	7.7	
450 MHz		7.8
900 MHz		11.1
1 GHz	12.0	
1.5		14.5
2.5 GHz	20.0	19.0

SEALING BOOT

Optional sealing boot is recommended. Slide boot onto wire before terminating contact. After contact is installed in connector, slide boot forward into connector grommet to seal the contact cavity. "F" suffix on contact part number specifies contact supplied with 859-042-02 sealing boot.

Sealing Boot Dimensions		
Wire Dia. (in.)	Wire Dia. (mm.)	Part Number
.130 - .170	3.30 - 4.32	859-042-02

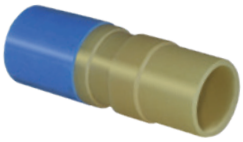

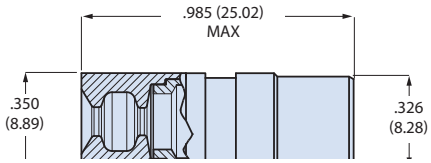

MIL-DTL-38999 Series I Type
M39029 and Glenair signature contact solutions

SIZE #8, 3 GHZ MAX OPERATING FREQUENCY, 50 OHM COAX CONTACTS AND CABLE

Pin Contact

Socket Contact

Dash Number	Cable Accommodation	"A" Hex	"B" Hex	Pin Part No.	Socket Part No.
-01	M17/152-00001 (RG316DS)	.128 (3.25)	-	852-031 -XX no sealing boot	852-030-XX no sealing boot
-02	M17/113-RG316	.128 (3.25)	-		
-03	M17/060-RG142 M17/128-RG400	-	.218 (5.54)	852-031-XXF with sealing boot	852-030-XXF with sealing boot
-04	M17/28-RG58	-	.218 (5.54)		

Pin Contact 852-031

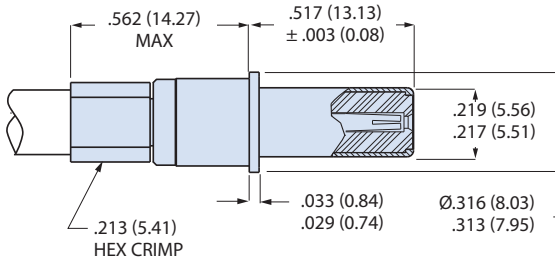

SHOWN WITHOUT SEALING BOOT

Socket Contact 852-030

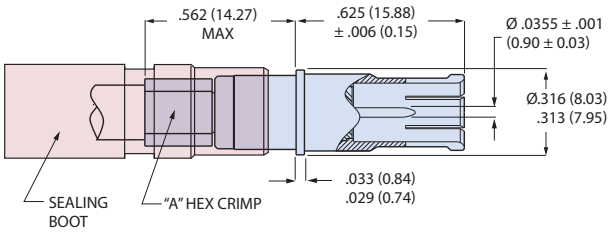

SHOWN WITH SEALING BOOT

Wire Dia. (in.)	Wire Dia. (mm.)	Part Number
.090 - .130	2.3 - 3.3	859-042-01
.130 - .170	3.3 - 4.3	859-042-02
.170 - .205	4.3 - 5.2	859-042-03

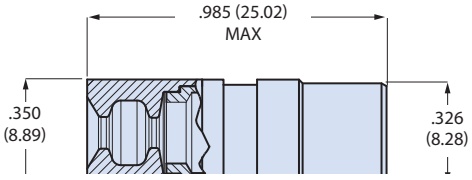

Sealing Boot	
Contact Part No.	Sealing Boot
852-031-01F	859-042-01
852-030-01F	859-042-01
852-031-02F	859-042-01
852-030-02F	859-042-01
852-031-03F	859-042-03
852-030-03F	859-042-03
852-031-04F	859-042-03
852-030-04F	859-042-03

© 2025 Glenair, Inc • 1211 Air Way, Glendale, CA 91201 • 818-247-6000 • www.glenair.com • U.S. CAGE code 06324 •

MIL-DTL-38999 Series I Type
M39029 and Glenair signature contact solutions

SIZE #8, 3 GHZ MAX OPERATING FREQUENCY, 50 OHM COAX CONTACTS AND CABLE

M17/152-00001

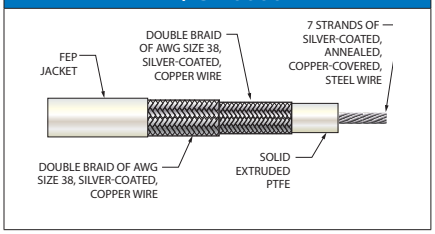

M17/113-RG316

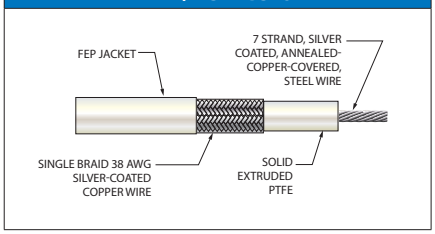

M17/60-RG142

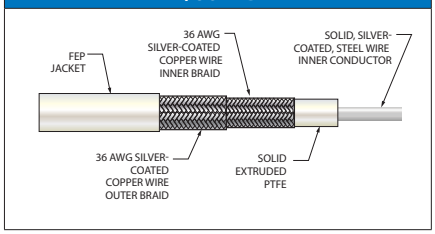

M17/128-RG400

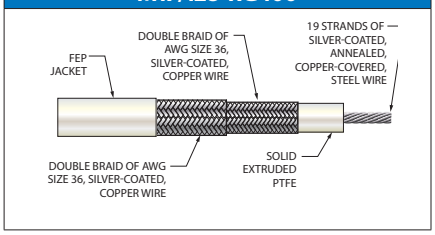

M17/28-RG058

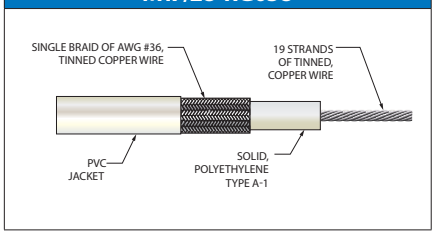

Military Part Number	M17/152-00001 (RG316DS)		M17/113-RG316		M17/060-RG142		M17/128-RG400		M17/28-RG058	
Impedance (Ohms)	50		50		50		50		50	
Velocity of Propagation %	69.5		69.5		69.5		69.5		69.5	
Capacitance (pF/ft)	32.0		32.0		29.3		32		32.2	
Conductor Wire Size	Seven Strands of Silver-Coated, Annealed Copper-Covered, Steel Wire. OD: 0.0201 ± .0010				Solid Silver-Coated, Steel Wire. OD: 0.0201 ± .0010		Solid Silver-Coated Steel Wire OD: 0.037 ± .001		19 Strands of Tinned Copper Wire OD: 0.0355 ± 0.0020	
Dielectric Core	Type F-1: Solid, Extruded PTFE		Type F-1: Solid, Extruded PTFE		Type F-1: Solid, Extruded PTFE		Type F-1: Solid, Extruded PTFE		Type A-1: Solid Polyethylene	
First Shield	38 AWG Silver-Coated Copper Wire 95.4% Nom. Coverage		38 AWG Silver-Coated Copper Wire 95.2% Nom. Coverage		36 AWG Silver-Coated Copper Wire 94.8% Nom. Coverage		36 AWG Silver-Coated Copper Wire 94.8% Nom. Coverage		Single Braid of 36 AWG Tinned Copper Wire 92.8% Nom. Coverage	
Second Shield	38 AWG Silver-Coated Copper Wire 94.6 Nom. Coverage		N/A		36 AWG Silver-Coated Copper Wire 93.1 Nom. Coverage		36 AWG Silver-Coated Copper Wire 93.6% Nom. Coverage		N/A	
Shielding Effectiveness (dB)	40 to 60 dB range acceptable for lower frequency applications									
Jacket	Type IX: FEP		Type IX: FEP		Type IX: FEP		Type IX: FEP		Type IIA: PVC	
Outer Diameter	.114 (2.90) ±.004 (.10)		.098 (2.49) ±.004 (.10)		.195 (4.95) ±.005 (0.13)		.195 (4.95) ±.005 (0.13)		.195 (4.95) ±.004 (0.10)	
Temperature Rating	-55°C to +200° C		-55°C to +200° C		-55°C to +200°C		-55°C to +200°C		-40°C to +85°C	
Weight	1.85 (lbs/100 ft.)		1.22 (lbs/ft.)		.043 (lbs/ft.)		5 (lbs/100 ft.)		.026 (lbs/ft.)	
Max. Attenuation	Freq. (MHz)	dB/100 ft	Freq. (MHz)	dB/100 ft	Freq. (MHz)	dB/100 ft	Freq. (MHz)	dB/100 ft	Freq. (MHz)	dB/100 ft
	50	7.5	50 MHz	30	50 MHz	3.0	50 MHz	3.2	50 MHz	4.0
	500	26	100 MHz	30	100 MHz	4.4	100 MHz	4.5	100 MHz	6.5
	1,000	40	400 MHz	23	400 MHz	9.3	400 MHz	10.5	400 MHz	17.0
	3,000	75	1000 MHz	21	1000 MHz	15.3	1,000 MHz	17	1000 MHz	28.0
	10,000	170	3000 MHz	17	3000 MHz	29.3	3,000 MHz	38		
	12,400	230			8000 MHz	57.8	10,000 MHz	78		
					12400 MHz	85.4	12,400 MHz	90		

SIZE #8, 4 GHZ MAX FREQUENCY, 75 OHM LOW-LOSS, MATCHED-IMPEDANCE COAX CONTACTS & CABLE

852-056
Pin Contact

852-057
Socket Contact

852-082
Pin Contact

852-083
Socket Contact

Size 8 coax contacts fit aerospace-grade digital video cable. 75 Ohm nominal impedance. 0-4 GHz frequency range. Crimp termination. Supplied as unassembled kit with contact body, center contact, outer ferrule and sealing boot. These snap-in, rear-release contacts fit Series 80 Mighty Mouse connectors and Glenair MIL-DTL-38999 Series I, III, and IV connectors with size #8 cavities. Gold-plated copper alloy, fluoroplastic insulators.

Size 8, 75 Ohm Matched-Impedance Coaxial Contacts

Cable	Contact without Sealing Boot		Contact with Sealing Boot		Sealing Boot	*Hex A Crimp Dim*
	Pin	Socket	Pin	Socket		
960-130 (V7568) 960-131 (V76261) 960-132 (V73263)	852-056-01	852-057-01	852-056-01F	852-057-01F	859-042-01	.218 (5.54)
RG179 (M17/94-RG179)	852-056-02	852-057-02	852-056-02F	852-057-02F	859-042-01	.128 (3.25)
V78209 (PIC™ Wire and Cable)	852-082-01	852-083-01	852-082-01F	852-083-01F	687-754-8-8	.231 (5.87)
LMR-240-75 (Times Microwave)	852-082-02	852-083-02	852-082-02F	852-083-02F	687-754-8-9	.231 (5.87)

Pin Contact 852-056-01/-02, 852-082-01/-02

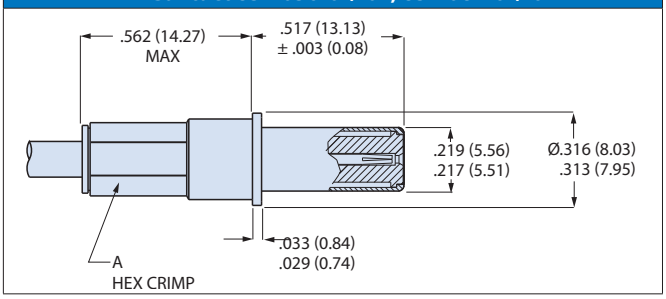

Pin Contact

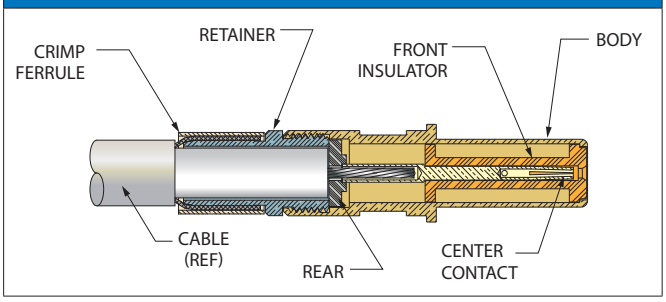

Socket Contact 852-057-01/-02, 852-083-01/-02

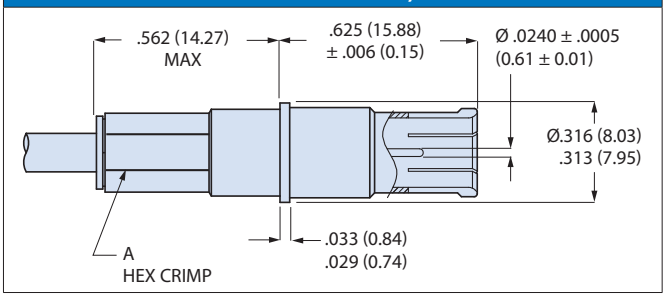

Socket Contact\l

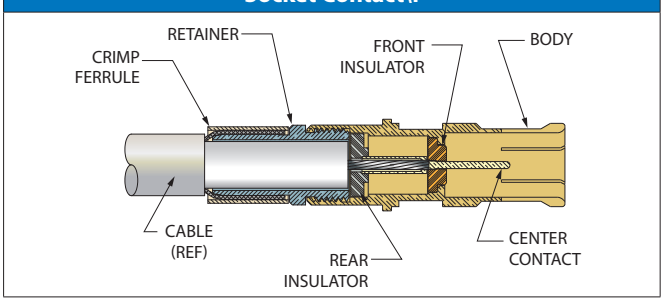

© 2025 Glenair, Inc • 1211 Air Way, Glendale, CA 91201 • 818-247-6000 • www.glenair.com • U.S. CAGE code 06324 •
SuperNine MIL-DTL-38999 Series I Type

SIZE #8 COAXIAL CONTACT CRIMP TOOLS AND SEALING BOOT

SEALING BOOT

Size 8 coax contacts fit aerospace-grade digital video cable. 75 Ohm nominal impedance. 0-4 GHz frequency range. Crimp termination. Supplied as unassembled kit with contact body, center contact, outer ferrule and sealing boot. These snap-in, rear-release contacts fit Series 80 Mighty Mouse connectors and Glenair MIL-DTL-38999 Series I, III, and IV connectors with size #8 cavities. Gold-plated copper alloy, fluoroplastic insulators.

TECHNICAL DATA

Specifications

- Operating temperature: -650C. to +2000C.
- Dielectric withstanding voltage: 500 Vac rms at sea level
- Current rating: 1 ampere
- VSWR: 1.25:1 max. @ 4 GHz
- 75 Ohm nominal impedance
- Durability: 500 mating cycles
- Shock: EIA-364-27 condition D
- Vibration: EIA-364-28 condition VI, letter J

Construction

- **Center contact, body, retainer, clamp nut, ferrule:** copper alloy, 50 microinches gold over nickel plating
- **Front and rear insulator**: fluoropolymer
- **Sealing boot:** fluorosilicone rubber, glass-filled PEI

Sealing Boot Dimensions

Wire Dia. (in.)	Wire Dia. (mm.)	Part Number
.090 - .130	2.3 - 3.3	859-042-01
.200 - .225	5.08 - 5.715	687-754-8-8
.225 - .240	5.715 - 6.096	687-754-8-9

Sealing Boot 859-042-01

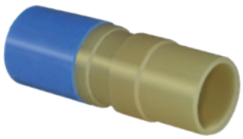

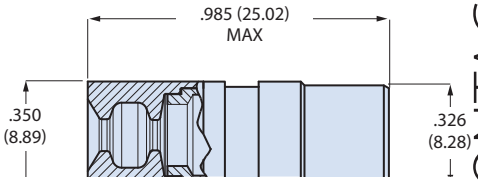

Sealing Boot 687-754-8-8/-9

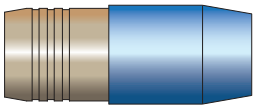

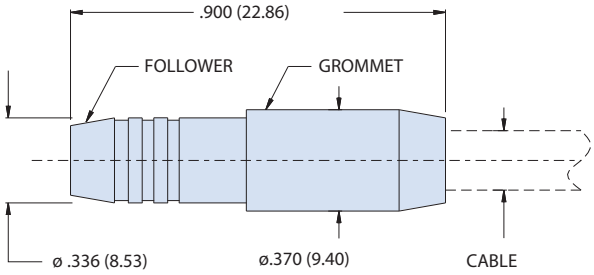

SIZE #8, 4 GHZ MAX FREQUENCY, 75 OHM LOW-LOSS, MATCHED-IMPEDANCE COAX CONTACTS & CABLE

PIC™ brand video cable is specially designed and manufactured for reliable performance in aircraft systems and other harsh environments involving high temperature, EMI and corrosive materials. Improved strength, lower attenuation, and better shielding compared with M17/94-RG179. Silver-plated conductor, foamed FEP dielectric, tinned copper braid, FEP or ETFE jacket. Skydrol resistant, RoHS compliant, meets FAA FAR Parts 23 and 25, Appendix F flammability, complies with MIL-DTL-17.

PIC™ V75268

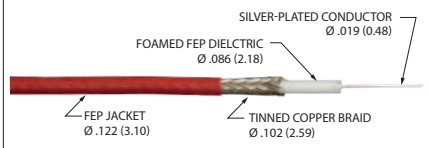

PIC™ V76261

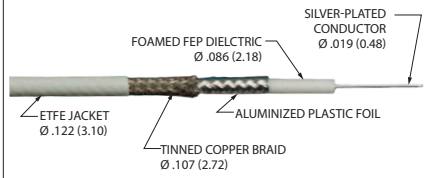

PIC™ V73263

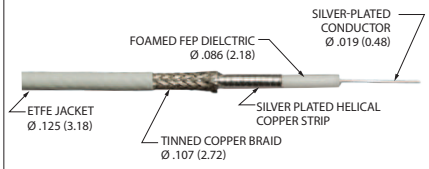

Glenair Part No.	960-130		960-131		960-132	
Manfacturer Part No.	V75268		V76261		V73263	
Mandufacturer	Picwire		Picwire		Picwire	
Impedance (Ohms)	75		75		75	
Velocity of Propagation %	80		80		80	
Capacitance (pF/ft)	16.0		16.0		16.0	
Conductor Wire Size	AWG 26 Stranded SPC		AWG 26 Stranded SPC		AWG 26 Stranded SPC	
Outer Diameter	0.12 (3.10)		0.12 (3.10)		0.13 (3.18)	
Dielectric	Foamed Fluoropolymer		Foamed Fluoropolymer		Foamed Fluoropolymer	
First Shield	Tinned copper braid, 95% coverage					
Second Shield	None		Aluminized film, 100% coverage		Silver plated helical copper strip, 100%	
Shielding Effectiveness (dB)	50		90		110	
Video Application	RS170		RS170		SMPTE 292M	
Temperature Rating	-65° to +165° C		-65° to +165° C		-65° to +165° C	
Weight (lbs/100 ft.)	1.2 lbs		1.1 lbs		1.5 lbs	
Time Delay	1.28		1.28		1.28	
Attenuation (dB/100 ft)	Nominal	Max.	Nominal	Max.	Nominal	Max.
1 MHz	0.51	0.55	0.49	0.52	0.43	0.58
10 MHz	1.70	1.77	1.6	1.71	1.4	1.6
100 MHz	5.3	5.7	5.1	5.5	4.5	5.0
400 MHz	11.1	11.8	10.6	11.3	9.6	10.6
1.45 GHz	23.0	24.6	21.9	23.4	20.0	22.0
3 GHz	35.0	37.4	33.7	36.1	30.9	34.0

© 2025 Glenair, Inc • 1211 Air Way, Glendale, CA 91201 • 818-247-6000 • www.glenair.com • U.S. CAGE code 06324 •

MIL-DTL-38999 Series I Type
M39029 and Glenair signature contact solutions

SIZE #8, 4 GHZ MAX FREQUENCY, 75 OHM LOW-LOSS, MATCHED-IMPEDANCE COAX CONTACTS & CABLE

PIC™ brand video cable is specially designed and manufactured for reliable performance in aircraft systems and other harsh environments involving high temperature, EMI and corrosive materials. Improved strength, lower attenuation, and better shielding compared with M17/94-RG179. Silver-plated conductor, foamed FEP dielectric, tinned copper braid, FEP or ETFE jacket. Skydrol resistant, RoHS compliant, meets FAA FAR Parts 23 and 25, Appendix F flammability, complies with MIL-DTL-17.

PIC™ V78209

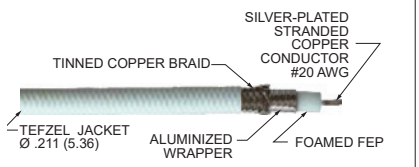

LMR®-240-75

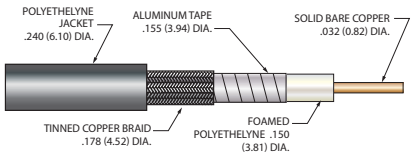

M17/94 RG179

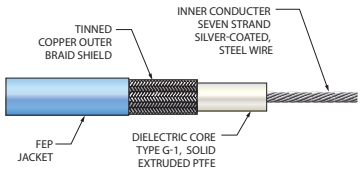

Glenair Part No.	962-007		N/A		N/A	
Manufacturer Part No.	V78209		LMR-240-75		N/A	
Military Part Number	N/A		N/A		M17/94-RG179	
Manufacturer	PIC™		Times Microwave		MIL-SPEC	
Impedance (Ohms)	75		75		75 ±3	
Velocity of Propagation %	80		84		69.5	
Capacitance (pF/ft)	16.5		16.1		23	
Conductor Wire Size	20 AWG Stranded SPC		.032 (.82)		.0040 (0.10)	
Outer Diameter	.21 (5.36)		.240 (6.10)		.100 (2.54)	
First Shield	Tin-Coated Braid		Tin-Coated Braid		7 strand SC[1], ACC[2], steel wire	
Second Shield	Aluminized film, 100% coverage		Aluminized film, 100% coverage		None	
Temperature Rating	-55° to +150° C		-40° to +85° C		-55° to +200°C	
Weight (lbs/100 ft.)	3.0		3.4		.012 (lbs/ft.)	
Max. Attenuation	Freq.	dB/100 ft	Freq.	dB/100 ft	Freq.	dB/100 ft
	1 MHz	0.4	50 MHz	1.6		
	10 MHz	0.9	450 MHz	5.0		
	100 MHz	3.0	900 MHz	7.2	4 GHz	21.0
	400 MHz	6.1	1.5 GHz	9.4		
	1.45 GHz	13.6	2.0 GHz	10.9		
	3 GHz	25.0	2.5 GHz	12.3		

1. SC = silver coated
2. ACC = annealed copper covered

MIL-DTL-38999 Series I Type
M39029 and Glenair signature contact solutions

SIZE #8 COAXIAL CONTACTS

Fig. 1
Pin Contact
852-007-08-367

Fig. 2
Socket Contact
852-006-08-366

Fig.	Item	Cable Accommodation	Part Number	AS39029 Part Number	Color Bands		
					1st	2nd	3rd
Fig. 1	Pin	M17/095-RG180	852-007-08-367	M39029/60-367	Orn	Blu	Vio
Fig. 2	Socket	M17/095-RG180	852-006-08-366	M39029/59-366	Orn	Blu	Blu
Fig. 3	Sealing Boot	M17/095-RG180	859-042-02	N/A			

Pin Contact 852-007

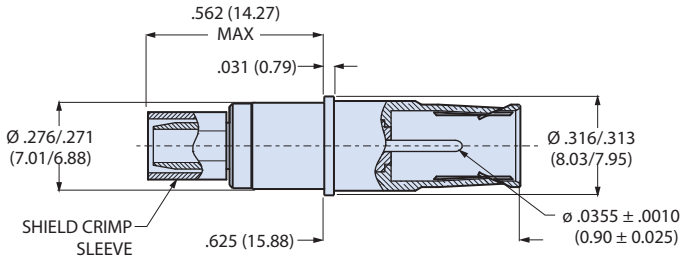

Socket Contact 852-006

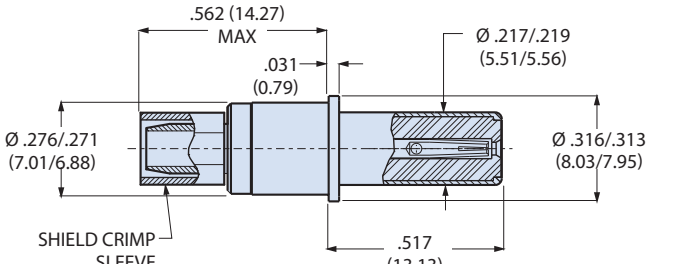

Coax contacts accept M17/095-RG180 cable. These snap-in, rear release contacts fit Glenair Series 80 Mighty Mouse connectors and Glenair MIL-DTL-38999 Series I, III, and IV connectors with size #8 cavities. Crimp termination. Gold-plated copper alloy, Fluoropolymer insulator. Supplied unassembled. Order sealing boot separately (fig. 3). 1 A current rating, 500 Vac. SAE AS39029 qualified.

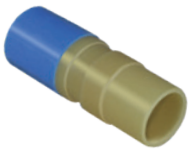

Wire Dia. (in.)	Wire Dia. (mm.)	Part Number
.130 - .170	3.3 - 4.3	859-042-02

SEALING BOOT

Sealing boot is ordered separately. Slide boot onto wire before terminating contact. After contact is installed in connector, slide boot forward into connector grommet to seal the contact cavity.

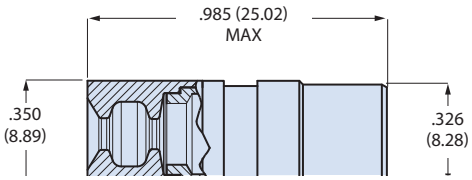

© 2025 Glenair, Inc • 1211 Air Way, Glendale, CA 91201 • 818-247-6000 • www.glenair.com • U.S. CAGE code 06324 •

MIL-DTL-38999 Series I Type
M39029 and Glenair signature contact solutions

SIZE #8 COAXIAL CONTACT 95 OHM CABLE

Material and Finish	
Contact Body, Center Contact, Ferrule	Copper Alloy, Gold Plated
Insulator	PTFE
Sealing Boot Grommet	Fluorosilicone
Grommet Follower	Polyetherimide

M17/95-RG180

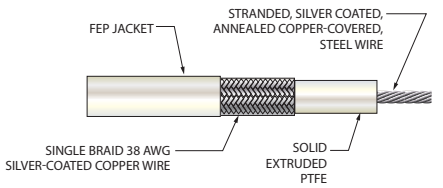

Contact Specifications	
Current Rating	1 ampere
Contact Resistance, Inner Contact	120 millivolt max. voltage drop @ 1 ampere
Contact Resistance – Outer Contact	60 millivolt max. voltage drop @ 12 amperes
Dielectric Withstanding Voltage	1300 Vrms Sea Level, 250 Vrms at 50,000 feet
Temperature Range	-65°C to +200°C
Durability	500 mating cycles
Corrosion	EIA-364-26, condition B, 48 hours
Vibration	EIA-364-28, condition V, letter J, 37g's
Shock	EIA-364-27, condition D, 300g's

Military Part Number	M17/95-RG180	
Maximum Operating Frequency	3 GHz	
Impedance (Ohms)	95	
Velocity of Propagation %	69.5	
Capacitance (pF/ft)	17.4	
Conductor	AWG 28 (7/38) Silver-Coated, Annealed-Copper-Covered, Steel Wire.	
Shielding Effectiveness (dB)	<-90 dB	
Dielectric Core	Type F-1: Solid, Extruded PTFE	
First Shield	38 AWG Silver-Coated Copper Wire 91.0% Nom. Coverage	
Second Shield	N/A	
Jacket	Type IX: FEP	
Outer Diameter	.141 (3.58) ± .004 (0.10)	
Temperature Rating	-55°C to +200° C	
Weight	.0198 (lbs/ft.)	
Time Delay nS/ft	N/A	
Max. Attenuation	Freq. (MHz)	dB/100 ft
	400	17.0

MIL-DTL-38999 Series I Type
M39029 and Glenair signature contact solutions

SIZE #8 CONCENTRIC TWINAX CONTACTS FOR MIL-STD-1553 DATABUS

Fig. 1
Pin Contact
853-003-08-625

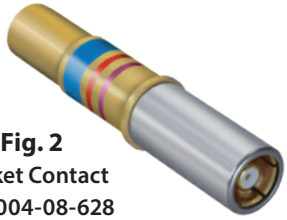

Fig. 2
Socket Contact
853-004-08-628

Fig. 3
Heatshrink Boot
(Supplied with Contact)

Fig. 4
Sealing Boot
859-042-01
(Not supplied with contact.
Order separately)

Fig.	Description	Cable Accommodation	Part Number	AS39029 Part Number	Color Bands		
					1st	2nd	3rd
Fig. 1	Pin	M17/176-00002	853-003-08-625	M39029/113-625	Blu	Red	Grn
Fig. 2	Socket	M17/176-00002	853-004-08-628	M39029/114-628	Blu	Red	Vio
Fig. 4	Sealing Boot	M17/176-00002	859-042-01				

Concentric twinax contacts accept M17/176-0002 shielded twisted pair databus cable. These snap-in, rear release contacts fit Glenair Series 23 Mighty Mouse connectors and Glenair MIL-DTL-38999 Series I, III and IV connectors with size #8 cavities. Crimp termination. Gold-plated copper alloy, FEP insulator. Supplied unassembled with heatshrink boot (Fig. 3). Order sealing boot separately (Fig. 4). 55mV max voltage drop at 1 amp test current. DWV at sea level: 1000 VAC between contacts; 500 VAC between intermediate and outer contact. SAE AS39029 qualified.

Pin Contact 853-003-08-625

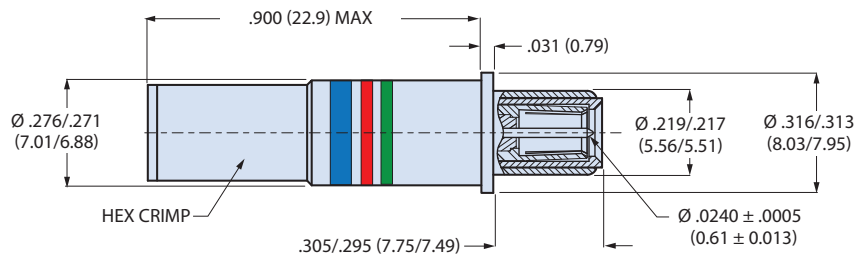

Socket Contact 853-004-08-628

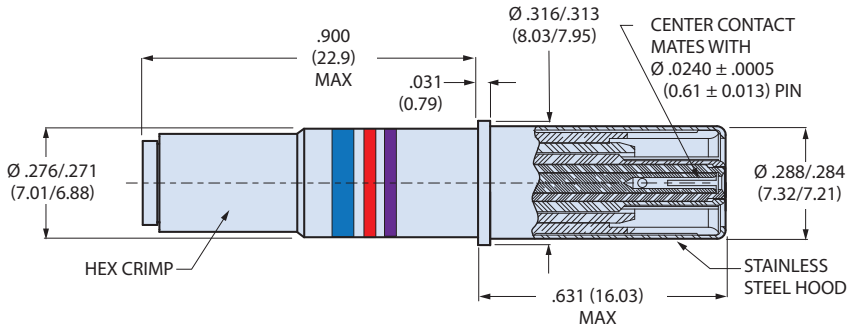

© 2025 Glenair, Inc • 1211 Air Way, Glendale, CA 91201 • 818-247-6000 • www.glenair.com • U.S. CAGE code 06324 •

MIL-DTL-38999 Series I Type
M39029 and Glenair signature contact solutions

CABLE FOR SIZE #8 TWINAX CONTACTS FOR MIL-STD-1553 DATABUS

HEATSHRINK BOOT

Supplied with contact. Slide onto cable before terminating contact. Slide onto contact after the cable is terminated. Apply heat to shrink the boot and melt the adhesive. Install contact into connector.

SEALING BOOT

Sealing boot is ordered separately. Slide boot onto wire before terminating contact. After contact is installed in connector, slide boot forward into connector grommet to seal the contact cavity. Additional information on sealing boot is on the next page.

Material and Finish	
Contact Body, Inner and Intermediate Contacts and Crimp Sleeve	Copper Alloy / Gold Plated
Insulators	Peek and PTFE / N/A
Sealing Boot Grommet	Fluorosilicone
Grommet Follower	Polyetherimide

Contact Specifications	
Current Rating	**1 ampere**
Contact Resistance, Center and Intermediate Contacts	55 millivolt max. voltage drop @ 1 ampere
Contact Resistance – Outer Contact	75 millivolt max. voltage drop @ 12 amperes
Dielectric Withstanding Voltage, Center Contact to Intermediate Contact	1000 Vrms Sea Level, 250 Vrms at 70,000 feet
Dielectric Withstanding Voltage, Intermediate Contact to Outer Contact	500 Vrms Sea Level, 250 Vrms at 70,000 feet
Temperature Range	-65°C to +175°C
Durability	500 mating cycles
Corrosion	EIA-364-26, condition B, 48 hours
Vibration	EIA-364-28, condition V, letter J, 37g's
Shock	EIA-364-27, condition D, 300g's

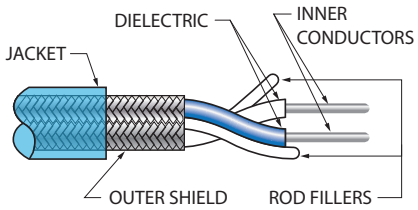

Military Part Number	M17/176-00002	
Impedance	77 Ohm	
Operating Frequency	10 MHz max	
Velocity of Propagation %	68	
Capacitance	24 pF/foot	
Conductor	Two - 24 AWG (19/36) silver-coated, high strength copper alloy wire	
Dielectric	PTFE	
Outer Conductor	Single braid of AWG 38, silver-coated, high strength copper alloy wire	
Jacket	Type XIII: PFA	
Outer Dia.	.129 (3.28) ± .005 (0.13)	
Temperature Rating	-55° to +200°C	
Weight	18 lbs/1000ft	
Max. Attenuation	Freq. (MHz)	dB/100 ft
	1	1.4

SIZE #8 DIFFERENTIAL TWINAX CONTACTS

Fig. 1
Pin Contact
853-014

Fig. 2
Socket Contact
853-013

Fig.	Description	Cable	Part Number		
			Basic No.	Dash No	Grommet Follower (Omit for None)
Fig. 1	Pin	See Cable Accommodation Table	853-014	-01 thru -13	F
			853-018	-01	
			853-025	-01 and -02	
Fig. 2	Socket		853-013	-01 thru -13	
			853-017	-01	
			853-024	-01 and -02	

Differential twinax contacts accept shielded twisted pair databus cable. These snap-in, rear release contacts fit Series 80 Mighty Mouse connectors and Glenair MIL-DTL-38999 Series I, III, and IV connectors with size #8 cavities. Crimp termination. Gold-plated copper alloy , FEP insulator. Supplied unassembled with optional sealing boot.

Material and Finish	
Contact Body and Center Contact	Copper alloy / Gold Plated
Crimp Sleeve	Brass or Equivalent / Gold Plated
Insulator, Sealing Boot	High-grade Rigid Dielectric
Sealing Boot Grommet	Fluorosilicone
Grommet Follower	Polyetherimide

Contact Specifications	
Characteristic Impedance (Ohms)	100 ± 10
Frequency Range	DC – 3 GHz
Insulation Resistance, Ambient Temperature	5000 megOhms minimum
Contact Resistance – Inner Contact*	15.0 milliOhms maximum initial @ 1 ampere
Contact Resistance – Outer Contact*	3.0 milliOhms maximum initial @ 12 amperes
Dielectric Withstanding Voltage	1000 VAC RMS between contacts, 500 VAC RMS between contacts and shell
Temperature Range	-65°C to +200°C
Durability	500 mating cycles
Corrosion (salt Fog)	EIA-364-26, condition B, 48 hours
Vibration	EIA-364-28, condition VI, letter J, 43g's
Shock	EIA-364-27, condition D, 300g's

* Contacts are tested in mated condition at their extremities.

Cable Accommodation				
Dash No	Cable Accommodation	Conductor AWG	Ref. Cable Impedance	Assembly Instructions
-01	Gore RCN 8945	24	100 Ohms	AI85007
-02	Gore GSC-03-83971-00	24		
-03	TE (Raychem) 10612	24	77 Ohms	
-04	TE (Raychem) 0024A0024	24	100 Ohms	
	Tensolite 24463/9P025X-2 (LD) S280W502-1	24		
-05	M17/176-00002	24	77 Ohms	
	5 M2022-003	24	75 Ohms	
-07	TE 2525B0524	24	125 Ohms	AI85050
-09	Gore DXN2603 / TE 0028S2664	26/28	100 Ohms	AI85007
-10	PIC E10222	22		AI85138
-11	963-102-30	30		AI85142
-12	Gore GSC-05-84308-00	26		AI85143
-13	Gore DXN2602	24		AI85007

© 2025 Glenair, Inc • 1211 Air Way, Glendale, CA 91201 • 818-247-6000 • www.glenair.com • U.S. CAGE code 06324 •

SIZE #8 DIFFERENTIAL TWINAX CONTACTS

ABOUT DIFFERENTIAL TWINAX CONTACTS

Differential twinax contacts are multi-pin contacts with two signal pins and an outer contact body. These contacts are used for 77 Ohm MIL-STD-1553 databus and 100 Ohm serial data transmission. The outer contact body provides a 360-degree EMI shield around the signal contacts. A raised boss on the contact body aligns the contact for proper mating. This boss fits into a slot inside the connector. All size 8 SuperNine and Mighty Mouse connector inserts have this alignment slot.

Socket Contact 853-014

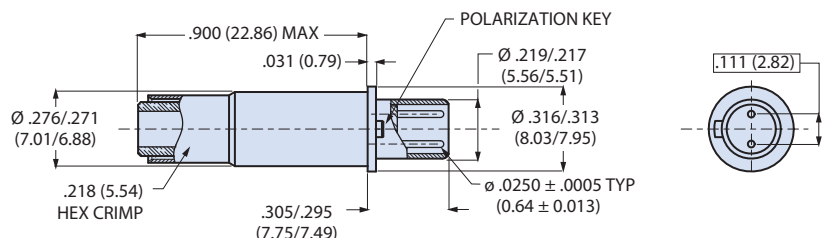

Socket Contact 853-013

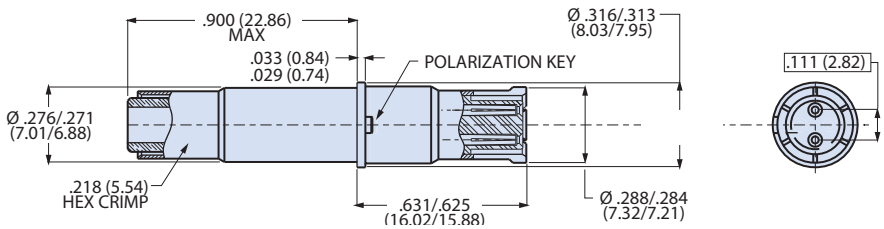

SEALING BOOT INFORMATION

The sealing boot is necessary to prevent moisture and contamination from penetrating the connector. The sealing boot is ordered separately. DO NOT USE HEATSHRINK BOOT IF USING SEALING BOOT. The boot consists of a rigid dielectric sleeve and a fluorosilicone rubber grommet. After contact is installed slide boot forward into connector grommet to seal the contact cavity. "F" suffix on contact part number specifies contact supplied with sealing

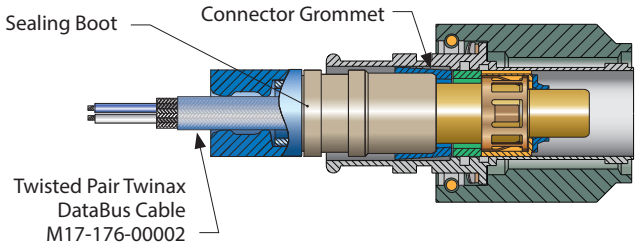

8 DIFFERENTIAL TWINAX CONTACT 100 OHM CABLE

Gore RCN8945

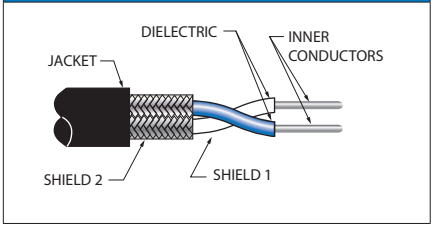

GSC-03-8I3971-00

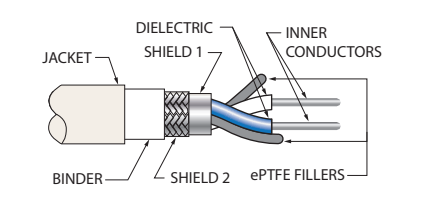

Raychem 10612

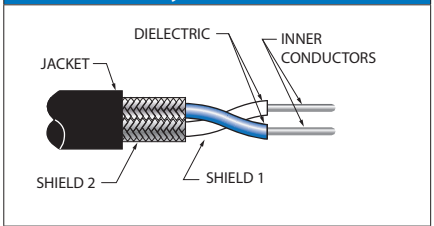

Raychem 0024A0024

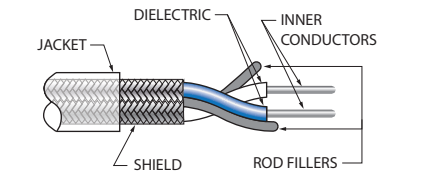

Tensolite 24463/9P025X-2 (LD) S280W502-1

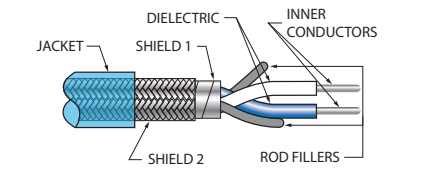

Cable Part Number	Gore RCN8945		Gore GSC-03-83971-00		Raychem 10612-24		Raychem 0024A0024		Tensolite 24463/9P025X-2 (LD) S280W502-1	
Impedance	100 ± 10		100 ±7		77 ± 5		100		100 ± 5.5 %	
Velocity of Propagation %	--		78		61		76		75	
Capacitance (pF/ft)	--		45 pF/ft.		30.0 pF/ft.		13.5 pF/ft.		13 pF/ft.	
Conductor Wire Size	AWG 24 (19/36) SPC[3]		AWG 24 (19/36) SCCA[1]		AWG 24 (19/36) SCCA[1]		AWG 24 (19/36) High-Strength SCCA[1]		AWG 24 (19/36) High-Strength SCCA[1]	
Dielectric	PTFE over ePTFE		FEP over expanded PTFE		Radiation-Crosslinked, Modified ETFE		Rayfoam H		PTFE over ePTFE	
Fillers	none		ePTFE		Radiation-Crosslinked Modified ETFE		Radiation-Crosslinked Modified ETFE		PTFE	
Shield	Shied 1: Aluminized Kapton		Shied 1: Aluminized Polyimide Foil		AWG 38 Tin-Coated Copper		38 AWG, Tin-Coated Copper		Shield 1: Flat Tin Coated Copper Braid	
	Shield 2: AWG 40 SPC[3] Braid		Shield 2: AWG 38 High Strength SSCA[1]						Shield 2: AWG 38A SPC[3] Braid	
Binder	None		ePTFE		None		None		None	
Jacket	Natural HSTF		FEP Color: White		Radiation-Crosslinked Modified ETFE Color: White		Modified FEP Color: Transparent White		Extruded FEP Color: Transparent Blue	
Outer Diameter	.162 (4.11) Max		0.13 (3.2)		.129 in (3.28)		.149 (3.78)		.150 (3.81)	
Temperature Rating	-55° C to + 200° C		-65° C to +200°C		150°C Max		- 55°C to +135°C		-55°C to 150° C	
Weight	TBD		27 g/m nominal		15.9 lbs/1000 ft (max)		18.1 lbs/1000 ft		19 lbs/1000 ft	
Max. Attenuation	Freq. (MHz)	dB/100 ft	Freq. (MHz)	dB/100 m	Freq. (MHz)	dB/100 ft	Freq. (MHz)	dB/100 ft	Freq. (MHz)	dB/75 ft
	100	6.7	1	2.7	1	1.4			6	1.8
	200	9.2	10	8.0						
	1000	22.0	20	11.2						
			100	25.2						

1. SCCA = silver-coated copper alloy 2. SPCA = silver-plated copper alloy 3. SPC = silver-plated copper

© 2025 Glenair, Inc • 1211 Air Way, Glendale, CA 91201 • 818-247-6000 • www.glenair.com • U.S. CAGE code 06324 •

MIL-DTL-38999 Series I Type
M39029 and Glenair signature contact solutions

SIZE #8 DIFFERENTIAL TWINAX CONTACT CABLE

M17/176-00002

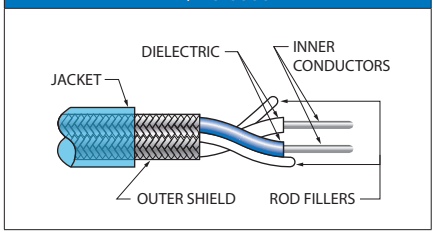

5M2022-003

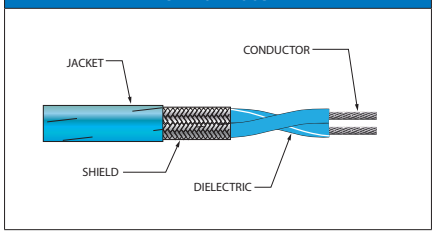

Belden 1350SB

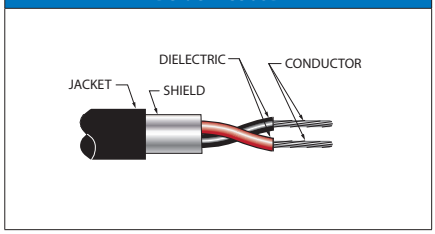

TE 252B0524

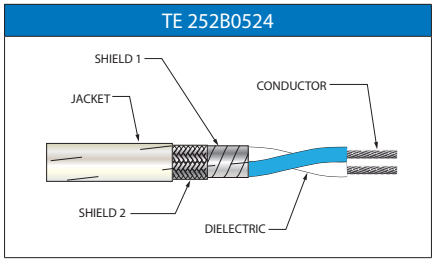

Cable Part Number	M17/176-00002		5M2022-003		Belden 1350SB		TE 252B0524	
Impedance	77 ± 3		75 ± 5		100		125 ± 10	
Velocity of Propagation %	71		55		79		78	
Capacitance	24 pF/ft.		24 pF/ft.		13.4 pF/ft.		11.0 pF/ft.	
Conductor Wire Size	AWG 24 (19/36) SCCA[1]		24 AWG (19/36) SPCA[2]		24 AWG (7/32) Tinned Copper		24 AWG, 19/36 High-Strength SCCA[1]	
Dielectric	PTFE		Extruded PTFE		PE		Rayfoam H	
Shield	Silver-Coated Copper Braid		38 AWG, SPC 90% Min. Coverage		Bi-Laminate Tape Beldfoil®		Aluminum Polyimide AWG 38, Silver Coated Copper	
Jacket	Type XIII: PFA Color: Blue		Extruded FEP Color: Blue		.179 (4.55) LSZH, Color: Black		UXL - Modified ETFE	
Outer Diameter	.129 (3.28) ± .005 (0.13)		.128 (3.25)		***.179 (4.55)***			
Temperature Rating	-55° to +200°C		-65° C to +200° C		-30°C to +75°C		--	
Weight	.018 lb/ft		15.7 lb/1000 ft		20 lbs/1000 ft		22.7 lbs/1000ft	
Max. Attenuation	Freq. (MHz)	dB/100 ft	Freq. (MHz)	dB/100 ft	Freq. (MHz)	dB/100 ft	Freq. (MHz)	dB/100 ft
	1	1.4	1	1.5	.768	.88	10	2.0
	3	2.1			1.4112	1.18		
	4	2.4			2.048	1.371		
	5	2.8			3.072	1.6		
	7	3.5			6.144	2.09		
	10	4.5			12.288	2.84		
					24.576	4.01		

1. SCCA = silver-coated copper alloy 2. SPCA = silver-plated copper alloy

MIL-DTL-38999 Series I Type
M39029 and Glenair signature contact solutions

SIZE #8 DIFFERENTIAL TWINAX CONTACT CABLE

Gore DXN2603 /TE 0028S2664

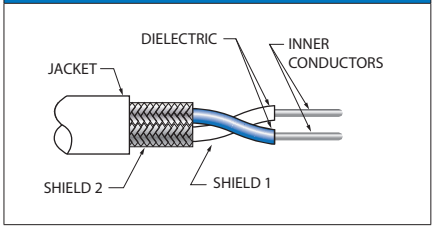

PIC E10222

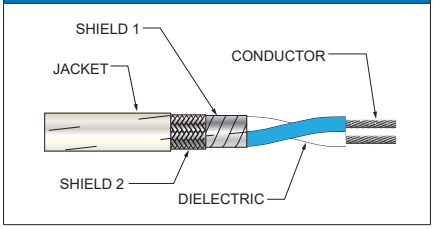

Glenair 963-102-30

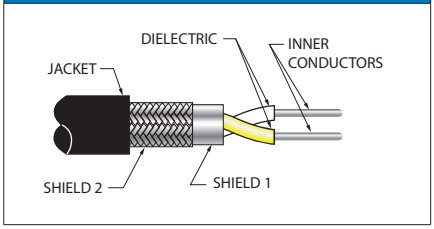

Gore GSC-05-84308-00

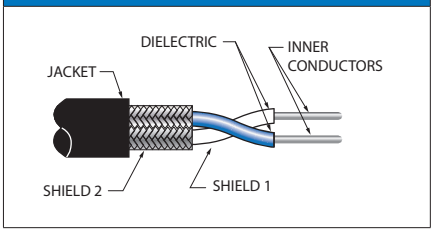

Gore DXN2602

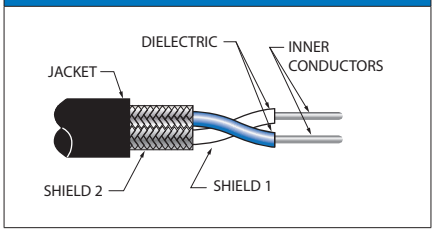

Cable Part Number	Gore DXN2603 / TE 0028S2664		PIC E10222		Glenair 963-102-30		Gore GSC-05-84308-00		Gore DXN2602	
Impedance	100 ± 10		100		100 ± 10		100 ± 4		100 ± 10	
Velocity of Propagation %	80		80.0		80.0		80.0		80	
Capacitance	13.0 pF/ft		13.0 pF/ft		15.0 pF/ft		45 (pF/m)		13.0 pF/ft	
SPCAConductor Wire Size	AWG 24 (19/36) SPCA[2]		AWG 22 stranded tin-plated copper		AWG 30 (19/42) High-Strength SPCA[2]		AWG 26 (7/34) High-Strength SPCA[2]		AWG 24 (19/36) SPCA[2]	
Dielectric	PTFE over ePTFE		Foamed Fluoropolymer Insulation		PFA		ePTFE		PTFE over ePTFE	
Shield	AWG 40 SPC Braid		Shield 1: Foil Shield Shield 2: Tin-Plated Copper Braid Shield		Shield 1: Aluminum/ Polyester Tape Shield 2: AWG 40 High-Strength SPCA		AWG 40 Silver Plated copper 90% min		AWG 40 SPC Braid	
Jacket	EF100 PTFE Color: White		ETFE Color: White		PFA Color: Black		ETFE Color: Black		EF100 PTFE Color: White	
Outer Diameter			**0.19 (4.80)**		***.107 (2.72)***		0.12 (3.1)		.09 (2.29)	
Temperature Rating	-55°C to +200°C		-50°C to +150°C		105° C Max		-200°C to +180°C		-55°C to +200°C	
Weight	11.3 lbs/1000 ft		2.3 lbs/100 ft		N/A		18 g/m max.		11.3 lbs/1000 ft	
Max. Attenuation	Freq. (MHz)	dB/100 ft	Freq. (MHz)	dB/100 ft	Freq. (MHz)	dB/100 ft	Freq. (MHz)	dB/100 m	Freq. (MHz)	dB/100 ft
	100	7.6	10	1.5	500	40	20	17	100	7.6
	200	10.7	100	5.4	1000	56	35	22	200	10.7
	500	17.3					70	30	500	17.3
	1000	25.0					80	32	1000	25.0
							100	36		

1. SCC = silver-coated copper 2. SPCA = silver-plated copper alloy 3. SPC = silver-plated copper

© 2025 Glenair, Inc • 1211 Air Way, Glendale, CA 91201 • 818-247-6000 • www.glenair.com • U.S. CAGE code 06324 •

MIL-DTL-38999 Series I Type
M39029 and Glenair signature contact solutions

SIZE #8 QUADRAX CONTACTS

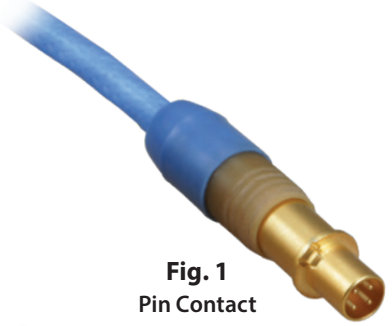

Fig. 1
Pin Contact
854-001

Fig. 2
Socket Contact
854-002

Figure	Cable Accommodation	Contact Type	Part Number Contact Only	P/N Contact and Sealing Boot	Wire AWG	Cable OD
1	Tensolite NF22Q100 Draka F-4704-7	Pin	**854-001-05**	**854-001-05F**	22	.190 (4.83)
1	PIC E51424 Tensolite NF24Q100	Pin	**854-001-02**	**854-001-02F**	24	.163 (4.14)
1	PIC E50424 Draka F 4704-4	Pin	**854-001-04**	**854-001-04F**	24	.175 (4.44)
1	PIC E51426 Tensolite NF26Q100	Pin	**854-001-01**	**854-001-01F**	26	.143 (3.63)
1	Draka F 4704-6	Pin	**854-001-03**	**854-001-03F**	26	.149 (3.78)
2	Tensolite NF22Q100 Draka F-4704-7	Socket	**854-002-05**	**854-002-05F**	22	.190 (4.83)
2	PIC E51424 Tensolite NF24Q100	Socket	**854-002-02**	**854-002-02F**	24	.163 (4.14)
2	PIC E50424 Draka F 4704-4	Socket	**854-002-04**	**854-002-04F**	24	.175 (4.44)
2	PIC E51426 Tensolite NF26Q100	Socket	**854-002-01**	**854-002-01F**	26	.143 (3.63)
2	Draka F 4704-6	Socket	**854-002-03**	**854-002-03F**	26	.149 (3.78)

100 Ohm quadrax contacts accept standard flight-grade star quad cable. These snap-in, rear release contacts fit Glenair Series 800 through 805 Mighty Mouse connectors (not compatible with Series 806) with size #8 keyed insulators to properly align contact. Crimp termination. Contact has in-line key for alignment in connector. Gold-plated copper alloy , thermoplastic insulators. Supplied as unassembled kit.

Contact Specifications	
Characteristic Impedance	100 Ohms ± 10 Ohms
Frequency Range	DC – 3 GHz
Insulation Resistance, Ambient Temperature	5000 megOhms minimum
Contact Resistance – Inner Contact	15.0 milliOhms maximum initial @ 1ampere
Contact Resistance – Outer Contact	3.0 milliOhms maximum initial @ 12 amperes
Dielectric Withstanding Voltage	1000 Vac RMS between contacts, 500 Vac RMS between contacts and shell
Temperature Range	-65°C to +200°C
Durability	500 mating cycles
Corrosion (salt Fog)	EIA-364-26, condition B, 48 hours
Vibration	EIA-364-28, condition VI, letter J, 43g's
Shock	EIA-364-27, condition D, 300g's

Material And Finish	
Contact Body, Inner Contact	Copper Alloy / Gold Plated
Crimp Ferrule	Brass or Equivalent / Gold Plated
Insulator	PTFE, Polyetherimide or equivalent
Sealing Boot Grommet	Fluorosilicone
Grommet Follower	Polyetherimide

MIL-DTL-38999 Series I Type
M39029 and Glenair signature contact solutions

SIZE #8 QUADRAX CONTACTS

854-001 Pin

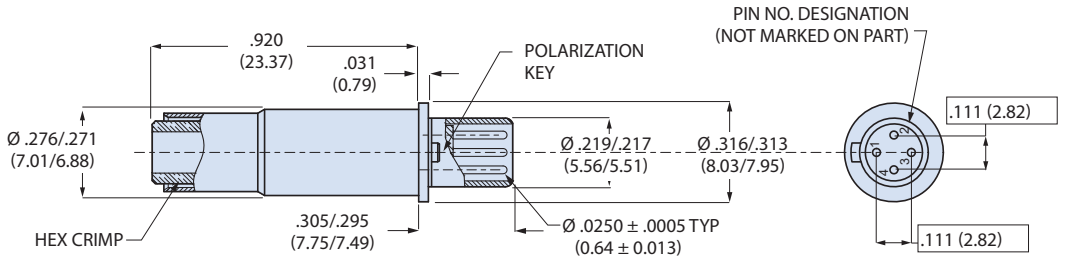

854-002 Socket

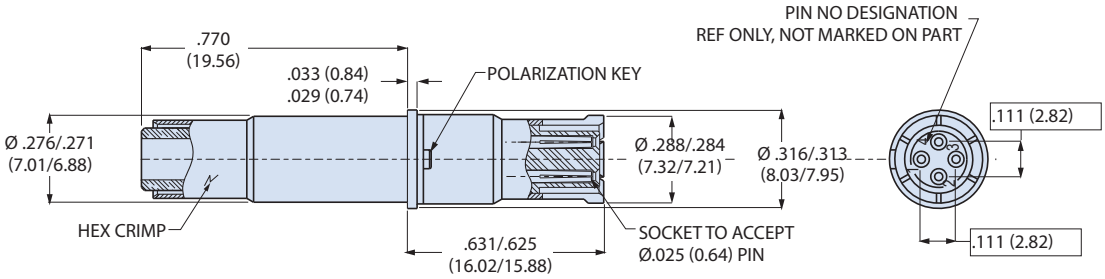

ABOUT QUADRAX CONTACTS AND STAR QUAD CABLE

Quadrax contacts are size 8 multi-pin contacts with four signal pins and an outer contact body. These contacts are used for ARINC 664 100BASE-T Ethernet. Each quadrax contact yields one Ethernet port. The outer contact body provides a 360-degree EMI shield around the signal contacts. Star quad cables have four parallel wires uniformly twisted around a center filler. These 100 Ohm high performance 100BASE-T cables are designed for use in aircraft systems. The cable has two shields– a flat tinned copper braid inner shield and an outer tinned copper overbraid. The FEP jacket meets FAA flammability requirements.

Arinc 664 Star Quad Cable

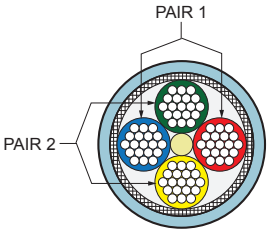

SEALING BOOT

Optional sealing boot is recommended. Slide boot onto wire before terminating contact. After contact is installed in connector, slide boot forward into connector grommet to seal the contact cavity. "F" suffix on contact part number specifies contact supplied with 859-042-02 sealing boot.

Dimensions		
Wire Dia. (in.)	Wire Dia. (mm.)	Part Number
.090 - .130	2.3 - 3.3	859-042-01
.130 - .170	3.3 - 4.3	859-042-02
.170 - .205	4.3 - 5.2	859-042-03

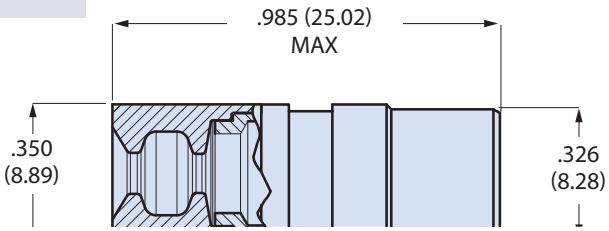

© 2025 Glenair, Inc • 1211 Air Way, Glendale, CA 91201 • 818-247-6000 • www.glenair.com • U.S. CAGE code 06324 •

MIL-DTL-38999 Series I Type
M39029 and Glenair signature contact solutions

SIZE #8, 100 OHM QUADRAX CONTACT CABLE

Tensolite NF22Q100 (Draka F-4704-7)

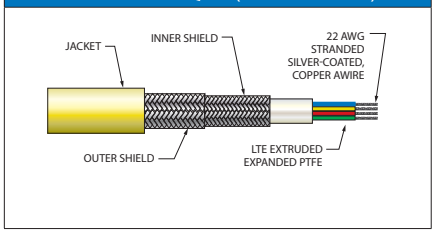

PIC E51424

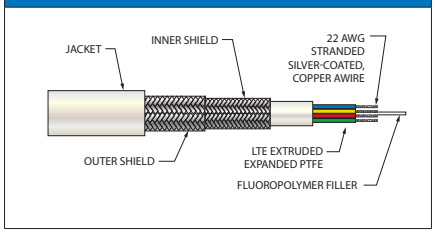

PIC E50424 or Draka F 4704-4

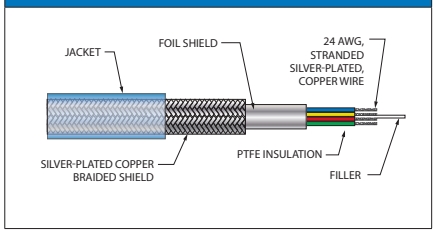

PIC E51426 or Tensolite NF26Q100

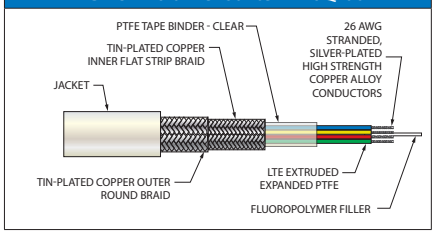

Draka F 4704-6

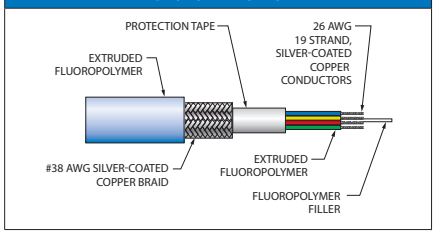

Cable Part Number	Tensolite NF22Q100 (Draka F-4704-7)		PIC E51424		PIC E50424 Draka F 4704-4		PIC E51426 Tensolite NF26Q100		Draka F 4704-6	
Impedance	100		100		100		100		100	
Velocity of Propagation %	80.0		80.0		69.5		70.0		65	
Capacitance (pF/ft)	13.0		13.0		13.0		14.5		--	
Conductor Wire Size	AWG 22		AWG 24		AWG 24		AWG 26		26	
Conductor Material	SCC[1]		Stranded SPCA[2]		Stranded SPC[3]		Stranded SPCA[2]		19 Strand SCC[1]	
Dielectric	PTFE		Fluoropolymer		PTFE		Fluoropolymer		Fluoropolymer	
Inner Shield Coverage	--		90% Braid		100% Foil		90% Braid		--	
Outer Shield Coverage	--		85 Braid		85% Braid		85 Braid		--	
Pair #1	Red, Blue		Red, Blue		Red, Blue		Red, Blue		Red, Blue	
Pair #2	Yellow, Green		Yellow, Green		Yellow, Green		Yellow, Green		Yellow, Green	
Jacket	FEP		ETFE		Fluoropolymer		ETFE		Extruded Fluoropolymer	
Outer Diameter	.190 (4.83)		0.16 (4.06)		.17 (4.32)		0.14 (3.48)		--	
Temperature Rating	-55°C to 200°C		-55°C to 150°C		-55°C to 200°C		-55°C to 150°C		-65°C to 125°C	
Weight	34.5 lbs/1000 ft		2.2 lbs/100 ft		2.7 lbs/100 ft		1.8 lbs/100 ft		--	
Max. Attenuation	Freq. (MHz)	dB/100 ft	Freq. (MHz)	dB/100 ft	Freq. (MHz)	dB/100 ft	Freq. (MHz)	dB/100 ft	Freq. (MHz)	dB/100 ft
			10	2.3/2.7	10	2.2/3.0	10	2.8/3.2	1	.092
	100	6.4/7.3	100	8.0/9.2	100	7.1/8.2	100	9.6/11.0	4	1.83
									10	2.75
									16	3.66
									20	4.27
									62.5	7.62
									100	9.15

1. SCC = silver-coated copper 2. SPCA = silver-plated copper alloy 3. SPC = silver-plated copper

THERMOCOUPLE CONTACTS

MATERIAL AND FINISH

Thermocouple contacts: constanston, alumel, and chromel unplated, per ANSI 96.1. Iron contacts with cadmium finish
Socket contact hood: stainless steel, passivated per AMS-QQ-P-35.

How-To-Order Thermocouple Contacts

Type	Mating End Size	Wire Accomodation	Glenair Part Number	Material	Finish
Pin	23	23 AWG	857-104A	Alumel	None
	23	23 AWG	857-104C	Chromel	None
	22	22-28 AWG	850-181-22-470	Constanton	None
	22	22-28 AWG	850-181-22-471	Alumel	None
	22	22-28 AWG	850-181-22-472	Chromel	None
	22	22-28 AWG	850-181-22-473	Iron	Cadmium Plate*
	20	20-24 AWG	850-181-20-474	Constanton	None
	20	20-24 AWG	850-181-20-475	Alumel	None
	20	20-24 AWG	850-181-20-476	Chromel	None
	20	20-24 AWG	850-181-20-477	Iron	Cadmium Plate*
	16	16-20 AWG	850-181-16-478	Constanton	None
	16	16-20 AWG	850-181-16-479	Alumel	None
	16	16-20 AWG	850-181-16-480	Chromel	None
	16	16-20 AWG	850-181-16-481	Iron	Cadmium Plate*
Socket	23	23 AWG	857-105A	Alumel	None
	23	23 AWG	857-105C	Chromel	None
	22	22-28 AWG	850-183-22-482	Constanton	None
	22	22-28 AWG	850-183-22-483	Alumel	None
	22	22-28 AWG	850-183-22-484	Chromel	None
	22	22-28 AWG	850-183-22-485	Iron	Cadmium Plate*
	20	20-24 AWG	850-183-20-486	Constanton	None
	20	20-24 AWG	850-183-20-487	Alumel	None
	20	20-24 AWG	850-183-20-488	Chromel	None
	20	20-24 AWG	850-183-20-489	Iron	Cadmium Plate*
	16	16-20 AWG	853-183-16-490	Constanton	None
	16	16-20 AWG	853-183-16-491	Alumel	None
	16	16-20 AWG	853-183-16-492	Chromel	None
	16	16-20 AWG	853-183-16-493	Iron	Cadmium Plate*

* Chromate clear coat

© 2025 Glenair, Inc • 1211 Air Way, Glendale, CA 91201 • 818-247-6000 • www.glenair.com • U.S. CAGE code 06324 •

MIL-DTL-38999 Series I Type
M39029 and Glenair signature contact solutions

SIZE #12 PNEUMATIC CONTACTS

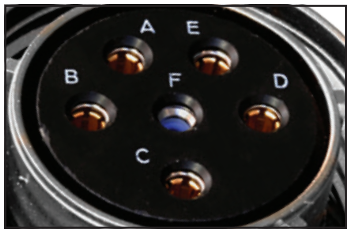

Cavity F contains a Pitot tube
Socket contact

Contact Type	For Use In	Part Number
Pin	D38999 Type, All Series	830-003[1]

1. 830-003 supersedes 857-011

Contact Type	For Use In	Part Number
Socket	D38999 Type Series I, III, IV	830-005

Stainless steel pneumatic contacts fit MIL-DTL-38999 connectors. Contacts snap into size #12 cavities. Attach to 3/32 inch (2.38) diameter tubing. Socket contact has fluorosilicone O-ring and PTFE backup washers. Originally designed for pitot tube connections, these pneumatic contacts are rated for 100 psi maximum air pressure. No installation tool is required. Remove contacts with plastic extraction tool 809-132 (M81969/14-04).

SIZE #8 CAVITY OPTOELECTRONIC CONTACT

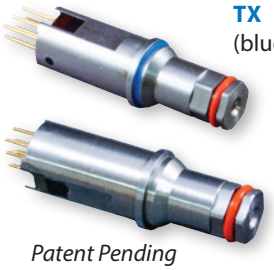

Patent Pending

How-To-Order Size 8 Transmitter Optoelectronic Contacts		
Type	Signal Type	Glenair Part Number
Transmitter	1.25 Gbps	050-301-01-T
	2.50 Gbps	050-301-02-T
	3.20 Gbps	050-301-03-T
	4.25 Gbps	050-301-04-T

How-To-Order Size 8 Receiver Optoelectronic Contacts		
Type	Signal Type	Glenair Part Number
Receiver	1.25 Gbps	050-301-01-R
	2.50 Gbps	050-301-02-R
	3.20 Gbps	050-301-03-R
	4.25 Gbps	050-301-04-R

Size 8 Cavity Optoelectronic contacts transmit and receive differential CML electrical signals over Multimode fiber optic cable. Transmitters consist of a laser driver with a temperature compensation circuit to maintain optical power over the entire operating temperature range, and a 850nm VCSEL laser. Receivers consist of an 850nm PIN Photo Detector, a Transimpedance Amplifier with automatic gain control circuit, and a Limiting Amplifier. Differential output data signals are CML compatible. The transmitter has a Tx Disable pin to turn off transmitter output and a Tx Fault pin to signal a fault condition. Receiver includes a CMOS compatible Loss of Signal Indicator to prevent invalid data.

MATERIAL/FINISH

Shell: 300CRES/Passivate or NM6
Seal: Silicone elastomer
Ferrule & sleeve: Zirconia ceramic
PC tails: Copper alloy/gold plated
PCB flex: FR4 & Polyimide
Solder type: RoHS compliant Sn95/Sb5 (232°C melting temp) & RoHS compliant Sn96.5/Ag3.0/Cu0.5 (217° melting)

MIL-DTL-38999 Series I Type
Crimp contact termination instructions

HOW TO TERMINATE, INSTALL, AND REMOVE CRIMP CONTACTS

1 ***Set Up Crimp Tool***. Install proper positioner into crimp tool. The label on the positioner shows the proper tool setting for each wire size. Turn the adjustment wheel to the correct setting.

2 ***Strip Wire.*** Remove wire insulation, taking care to avoid nicking or cutting wire strands. Strip wire to proper length so wire is visible thru inspection hole.

3 ***Insert wire*** into contact. The wire should be visible in the inspection hole.

4 ***Insert contact*** into crimp tool as shown. Make sure that the contact is fully inserted into the tool. Squeeze handle completely. The ratchet mechanism will not allow a partial crimp. Release handle and remove contact.

5 ***Inspect crimped contact***. Wire should be fully inserted and the crimp should be uniform in appearance.

Insertion/Extraction Tool

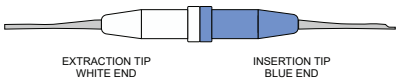

6 ***Install contact into connector***. Push the contact through the rear grommet until the contact locks into place. This can usually be done by hand without the need for a tool. If the wire gage is #26 or smaller, a tool is helpful. There are two techniques for installing contacts with a tool. One method is to push the contact in by hand, then use the tool to finish the insertion. The other method is to position the insertion tip against the contact shoulder, then insert the contact. Use insertion/extraction tool 809-088 to install contacts. Slide the wire into the groove on the blue end of the tool. Slide the tool tip up the contact until it touches the contact shoulder. **USE CARE TO AVOID DAMAGING THE CONNECTOR.**

7 ***Contact Extraction.*** Use tool M81969/14-01. The white end is used for contact extraction. First, push the wire into the groove of the metal tip. Slide the tip of the tool into the connector. Push the tool into the connector cavity until the tip bottoms in the connector. Avoid wiggling or rocking the tip. This may damage the cavity. A straight push is best. Pinch the wire between your finger and the white plastic grip and slide the tool and contact out of the connector. **Wire insulation diameter greater than 0.045 inches (1.14mm) is too large to work properly with the extraction tool. Connector damage is possible.**

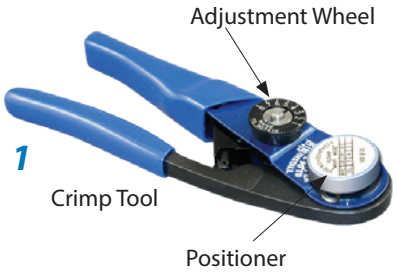

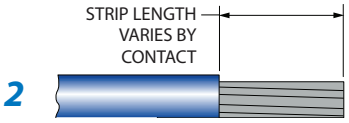

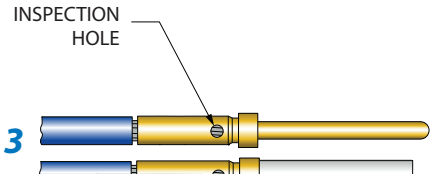

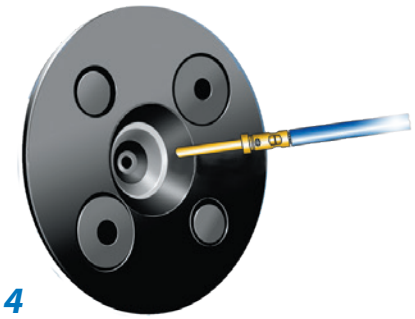

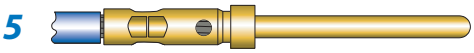

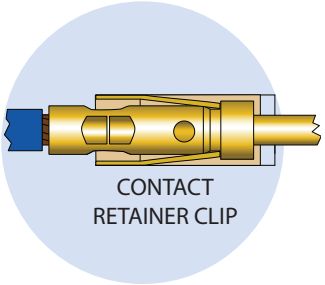

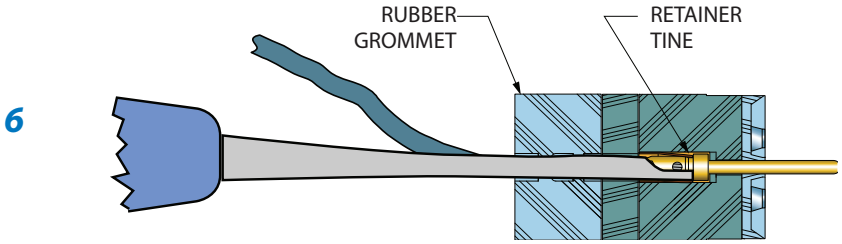

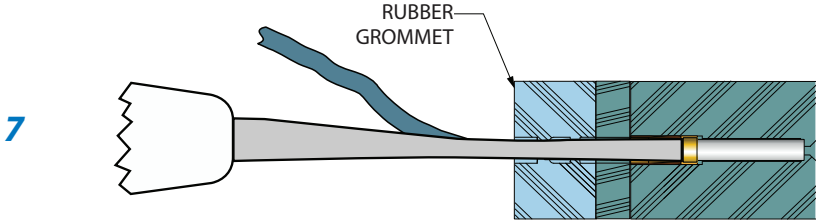

© 2025 Glenair, Inc • 1211 Air Way, Glendale, CA 91201 • 818-247-6000 • www.glenair.com • U.S. CAGE code 06324 •

MIL-DTL-38999 Series I Type
Signal and power crimp contact tool cross reference

Signal Crimp Contacts						
Size	Gender	Contact Part Number	Crimp Tool	Positioner	Insertion Tool	Extraction Tool
D38999 QPL and Commercial Contacts						
23	Pin	M39029/122-670	**809-015** M22520/2-01	**859-210** M22520/2-13	**859-163** M81969/1-05	**859-163** M81969/1-05
23	Skt	M39029/121-663	**809-015** M22520/2-01	**859-211** M22520/2-16	**859-163** M81969/1-05	**859-163** M81969/1-05
22	Pin	**850-002-22-360** M39029/58-360	**809-015** M22520/2-01	**859-018** M22520/2-09	**859-163** M81969/14-01	**859-163** M81969/14-01
22	Skt	**850-001-22-348** M39029/56-348	**809-015** M22520/2-01	**809-369** M22520/2-07	**859-163** M81969/14-01	**859-163** M81969/14-01
20	Pin	**850-002-20-363** M39029/58-363	**809-015** M22520/2-01	M22520/2-10	**809-207** M81969/14-10	**809-207** M81969/14-10
			809-136 M22520/1-01	**809-137** M22520/1-04 (Red)		
20	Skt	**800-001-20-351** M39029/56-351	**809-015** M22520/2-01	M22520/2-10	**809-207** M81969/14-10	**809-207** M81969/14-10
			809-136 M22520/1-01	**809-137** M22520/1-04 (Red)		
16	Pin	**850-002-16-364** M39029/58-364	**809-136** M22520/1-01	**809-137** M22520/1-04 (Blue)	**809-131** M81969/14-03	**809-131** M81969/14-03
16	Skt	**850-001-16-352** M39029/56-352	**809-136** M22520/1-01	**809-137** M22520/1-04 (Blue)	**809-131** M81969/14-03	**809-131** M81969/14-03
12	Pin	**850-002-12-365** M39029/58-365	**809-136** M22520/1-01	**809-137** M22520/1-04 (Yellow)	**809-132** M81969/14-04	**809-132** M81969/14-04
12	Skt	**850-001-12-353** M39029/56-353	**809-136** M22520/1-01	**809-137** M22520/1-04 (Yellow)	**809-132** M81969/14-04	**809-132** M81969/14-04
Thermocouple Contacts						
23	Pin	**857-104**	**809-015** M22520/2-01	**859-210** M22520/2-13	**859-163** M81969/1-05	**859-163** M81969/1-05
23	Skt	**857-105**	**809-015** M22520/2-01	**859-211** M22520/2-16	**859-163** M81969/1-05	**859-163** M81969/1-05
22	Pin	**850-181-22**	**809-015** M22520/2-01	**859-018** M22520/2-09	**859-163** M81969/14-01	**859-163** M81969/14-01
22	Skt	**850-183-22**	**809-136** M22520/2-01	**809-369** M22520/2-07	**859-163** M81969/14-01	**809-131** M81969/14-03
20	Pin	**850-181-20**	**809-015** M22520/2-01	M22520/2-10	**809-207** M81969/14-10	**809-207** M81969/14-10
20	Skt	**850-183-20**	**809-015** M22520/2-01	M22520/2-10	**809-207** M81969/14-10	**809-207** M81969/14-10
16	Pin	**850-181-16**	**809-136** M22520/1-01	**809-137** M22520/1-04 (Blue)	**809-131** M81969/14-03	**809-131** M81969/14-03
16	Skt	**850-183-16**	**809-136** M22520/1-01	**809-137** M22520/1-04 (Blue)	**809-131** M81969/14-03	**809-131** M81969/14-03

MIL-DTL-38999 Series I Type
Signal and power crimp contact tool cross reference

Signal Crimp Contacts						
Size	Gender	Contact Part Number	Crimp Tool	Positioner	Insertion Tool	Extraction Tool
Extended Durability D38999 Contacts						
22	Pin	**850-007-22-620** M39029/107-620	**809-015** M22520/2-01	**859-018** M22520/2-09	**859-163** M81969/14-01	**859-163** M81969/14-01
22	Skt	**850-006-22-614** M39029/106-614	**809-015** M22520/2-01	**809-369** M22520/2-07	**859-163** M81969/14-01	**859-163** M81969/14-01
20	Pin	**850-007-20-621** M39029/107-621	**809-136** M22520/1-01	**809-137** M22520/1-04 (Red)	**809-207** M81969/14-10	**809-207** M81969/14-10
			809-015 M22520/2-01	M22520/2-10		
20	Skt	**850-006-20-615** M39029/106-615	**809-136** M22520/1-01	M22520/2-10	**809-207** M81969/14-10	**809-207** M81969/14-10
			809-015 M22520/2-01	M22520/2-10		
16	Pin	**850-007-16-622** M39029/107-622	**809-136** M22520/1-01	**809-137** M22520/1-04 (blue)	**809-131** M81969/14-03	**809-131** M81969/14-03
16	Skt	**850-006-16-616** M39029/106-616	**809-136** M22520/1-01	**809-137** M22520/1-04 (blue)	**809-131** M81969/14-03	**809-131** M81969/14-03
12	Pin	**850-007-12-623** M39029/107-623	**809-136** M22520/1-01	**809-137** M22520/1-04 (yellow)	**809-132** M81969/14-04	**809-132** M81969/14-04
12	Skt	**850-006-12-617** M39029/106-617	**809-136** M22520/1-01	**809-137** M22520/1-04 (yellow)	**809-132** M81969/14-04	**809-132** M81969/14-04
SuperNine 233-205 and 233-206 Extended Durability Connector Contacts						
23	Pin	**857-189** (AS39029/18 Type)	**809-015** M22520/2-01	**859-210** M22520/2-13	M81969/16-04	M81969/16-04
23	Skt	**857-190** (AS39029/17 Type)	**809-015** M22520/2-01	M22520/2-16	M81969/16-04	M81969/16-04
22	Pin	**857-151-22** (IAW M39029/58-360)	**809-015** M22520/2-01	**859-018** M22520/2-09	**859-163** M81969/14-01	**859-163** M81969/14-01
22	Skt	**857-150-22** (IAW M39029/56-348)	**809-015** M22520/2-01	**809-369** M22520/2-07	**859-163** M81969/14-01	**859-163** M81969/14-01
20	Pin	**857-151-20** (IAW M39029/58-363)	**809-015** M22520/2-01	M22520/2-10	**809-207** M81969/14-10	**809-207** M81969/14-10
			809-136 M22520/1-01	**809-137** M22520/1-04 (Red)		
20	Skt	**857-150-20** (IAW M39029/56-351)	**809-015** M22520/2-01	M22520/2-10	**809-207** M81969/14-10	**809-207** M81969/14-10
			809-136 M22520/1-01	**809-137** M22520/1-04 (Red)		
16	Pin	**857-151-16** (IAW M39029/58-364)	**809-136** M22520/1-01	**809-137** M22520/1-04 (Blue)	**809-131** M81969/14-03	**809-131** M81969/14-03
16	Skt	**857-150-16** (IAW M39029/56-352)	**809-136** M22520/1-01	**809-137** M22520/1-04 (Blue)	**809-131** M81969/14-03	**809-131** M81969/14-03
12	Pin	**857-151-12** (IAW M39029/58-365)	**809-136** M22520/1-01	**809-137** M22520/1-04 (Yellow)	**809-132** M81969/14-04	**809-132** M81969/14-04
12	Skt	**857-150-12** (IAW M39029/56-353)	**809-136** M22520/1-01	**809-137** M22520/1-04 (Yellow)	**809-132** M81969/14-04	**809-132** M81969/14-04

© 2025 Glenair, Inc • 1211 Air Way, Glendale, CA 91201 • 818-247-6000 • www.glenair.com • U.S. CAGE code 06324 •

MIL-DTL-38999 Series I Type
RF crimp contact tool cross reference

Shielded Contact Assembly Tools

Contact P/N	Cable Accomodated		Gender	Size	Inner Contact		Cable Shield Hex		Insertion/ Removal Tool
					Tool	Positioner	Tool	Hex Die	
852-008 M39029/76	RG174, RG316, RG178, RG179		Pin	16	**809-015** M22520/2-01	**809-125** M22520/2-35	**809-127** M22520/4-01	**809-126** M22520/4-02	**809-131** M81969/14-03
852-009 M39029/77	RG174, RG316, RG178, RG179		Skt	16	**809-015** M22520/2-01	**809-125** M22520/2-35	**809-127** M22520/4-01	**809-126** M22520/4-02	**809-131** M81969/14-03
852-004 M39029/102	RG174, RG179, RG180, RG316		Pin	12	**809-015** M22520/2-01	**859-240** M22520/2-37	**809-129** M22520/5-01	**809-130** M22520/5-03	**809-132** M81969/14-04
852-005 M39029/103	RG174, RG179, RG180, RG316		Skt	12	**809-015** M22520/2-01	**859-123** K1457 (DMC)	**809-129** M22520/5-01	**809-130** M22520/5-03	**809-132** M81969/14-04
852-006 M39029/59-366	RG180		Skt	8	**809-015** M22520/2-01	**859-050** M22520/2-31	**809-129** M22520/5-01	**859-051** M22520/5-05	**859-049** M81969/14-12 Removal
852-007 M39029/60-367	RG180		Pin	8	**809-015** M22520/2-01	**859-050** M22520/2-31	**809-129** M22520/5-01	**859-051** M22520/5-05	**859-049** M81969/14-12 Removal
852-082-XX	Dash: -01	PIC Cable: V78209	Pin	8	**809-015** M22520/2-01	**859-240** M22520/2-37	**809-129** M22520/5-01	**859-007** M22520/5-45	**859-049** M81969/14-12 Removal
	Dash: -02	Times Microwave LMR-240-75		8	**809-015** M22520/2-01	**859-240** M22520/2-37	**809-129** M22520/5-01	**859-007** M22520/5-45	
	Dash: -03	Falmat: Deep Mini RG59 P/N: FM030115-4		8	**809-015** M22520/2-01	**859-240** M22520/2-37	**809-129** M22520/5-01		
852-083-XX	Dash: -01	PIC Cable: V78209	Skt	8	**809-015** M22520/2-01	**859-240** M22520/2-37	**809-129** M22520/5-01	**859-007** M22520/5-45	**859-049** M81969/14-12 Removal
	Dash: -02	Times Microwave LMR-240-75		8	**809-015** M22520/2-01	**859-240** M22520/2-37	**809-129** M22520/5-01	**859-007** M22520/5-45	
	Dash: -03	Falmat: Deep Mini RG59 P/N: FM030115-4		8	**809-015** M22520/2-01	**859-240** M22520/2-37	**809-129** M22520/5-01		
852-030-XX	Dash: -01	M17/152-00001 (RG316DS),	Skt	8	Solder Contact		**809-129** M22520/5-01	**809-130** M22520/5-03	
	Dash: -02	M17/113-RG316		8			**809-129** M22520/5-01	**809-130** M22520/5-03	
	Dash: -03	M17/060-RG142; M17/12/-RG400		8			**809-129** M22520/5-01	**859-047 or 859-007** M22520/5-45	
	Dash: -04	M17/28-RG58		8			**809-129** M22520/5-01	**859-047 or 859-007** M22520/5-45	
852-031-XX	Dash: -01	M17/152-00001 (RG316DS),	Pin	8	Solder Contact		**809-129** M22520/5-01	**809-130** M22520/5-03	**859-049** M81969/14-12 Removal
	Dash: -20	M17/113-RG316		8			**809-129** M22520/5-01	**809-130** M22520/5-03	
	Dash: -03	M17/060-RG142; M17/12/-RG400		8			**809-129** M22520/5-01	**859-047 or 859-007** M22520/5-45	
	Dash: -04	M17/28-RG58		8			**809-129** M22520/5-01	**859-047 or 859-007** M22520/5-45	

MIL-DTL-38999 Series I Type
RF crimp contact tool cross reference

Shielded Contact Assembly Tools

Contact P/N	Cable Accomodated		Gender	Size	Inner Contact Tool	Inner Contact Positioner	Cable Shield Hex Tool	Cable Shield Hex Hex Die	Insertion/ Removal Tool
852-042	LLSB-200, and LMR-195		Skt	8	Solder Contact		**809-129** M22520/5-01	**859-051** M22520/5-05	**859-049** M81969/14-12 Removal
852-043	LLSB-200, and LMR-195		Pin	8	Solder Contact		**809-129** M22520/5-01	**859-007 or 859-047** M22520/5-45	**859-049** M81969/14-12 Removal
852-056 75 ohm	Dash: -01	V75268, V76261, V73263	Pin	8	**809-015** M22520/2-01	**859-072** **809-240** M22520/2-37	**809-129** M22520/5-01	**859-007 or 859-047** M22520/5-45	**859-049** M81969/14-12 Removal
	Dash: -02	RG179		8	**809-015** M22520/2-01	**859-072** **809-240** M22520/2-37	**809-129** M22520/5-01	**809-130** M22520/5-03	
852-057 75 ohm	Dash: -01	V75268, V76261, V73263	Skt	8	**809-015** M22520/2-01	**859-072** **809-240** M22520/2-37	**809-129** M22520/5-01	**859-007 or 859-047** M22520/5-45	**859-049** M81969/14-12 Removal
	Dash: -02	RG179		8	**809-015** M22520/2-01	**859-072** **809-240** M22520/2-37	**809-129** M22520/5-01	**809-130** M22520/5-03	
853-003 (M39029/113)	M17/176-00002		Pin	8	**809-015** M22520/2-01	**859-072** **809-240** M22520/2-37	**809-129** M22520/5-01	**859-048** M22520/5-105	**859-049** M81969/14-12 Removal
853-004 (M39029/114)	M17/176-00002		Skt	8	**809-015** M22520/2-01	**859-072** **809-240** M22520/2-37	**809-129** M22520/5-01	**859-048** M22520/5-105	**859-049** M81969/14-12 Removal
853-013	M17/176-00002		Skt	8	**809-015** M22520/2-01	**859-072** **809-240** M22520/2-37	**809-129** M22520/5-01	**859-007 or 859-047** M22520/5-45	**859-049** M81969/14-12 Removal
853-014	M17/176-00002		Pin	8	**809-015** M22520/2-01	**859-072** **809-240** M22520/2-37	**809-129** M22520/5-01	**859-007 or 859-047** M22520/5-45	**859-049** M81969/14-12 Removal
853-017	Raychem EPD 32263		Skt	8	**809-015** M22520/2-01	**859-072** **809-240** M22520/2-37	**809-129** M22520/5-01	**859-007 or 859-047** M22520/5-45	**859-049** M81969/14-12 Removal
853-018	Raychem EPD 32263		Pin	8	**809-015** M22520/2-01	**859-072** **809-240** M22520/2-37	**809-129** M22520/5-01	**859-007 or 859-047** M22520/5-45	**859-049** M81969/14-12 Removal
853-024-XX	Dash: -01	McDonnell Douglas ST5M1212-002	Skt	8	**809-015** M22520/2-01	**859-072** **809-240** M22520/2-37	**809-129** M22520/5-01	**859-007 or 859-047** M22520/5-45	**859-049** M81969/14-12 Removal
	Dash: -02	Raychem 7726D0664							
853-025-XX	Dash: -01	Raychem 7726D0664	Pin	8	**809-015** M22520/2-01	**859-072** **809-240** M22520/2-37	**809-129** M22520/5-01	**859-007 or 859-047** M22520/5-45	**859-049** M81969/14-12 Removal
	Dash: -02	McDonnell Douglas ST5M1212-002							

© 2025 Glenair, Inc • 1211 Air Way, Glendale, CA 91201 • 818-247-6000 • www.glenair.com • U.S. CAGE code 06324 •

MIL-DTL-38999 Series I Type
RF crimp contact tool cross reference

Shielded Contact Assembly Tools									
					Inner Contact		Cable Shield Hex		Insertion/ Removal Tool
Contact P/N	Cable Accomodated		Gender	Size	Tool	Positioner	Tool	Hex Die	
854-001-XX	Dash: -01	Tensolite NF26Q100	Pin	8	809-015 M22520/2-01	859-072 809-240 M22520/2-37	809-129 M22520/5-01	859-007 or 859-047 M22520/5-45	859-049 M81969/14-12 Removal
	Dash: -02	Tensolite NF24Q100, PIC E51424		8	809-015 M22520/2-01	859-072 809-240 M22520/2-37	809-129 M22520/5-01	859-007 or 859-047 M22520/5-45	
	Dash: -03	Draka Fileca F 4704-6		8	809-015 M22520/2-01	859-072 809-240 M22520/2-37	809-129 M22520/5-01	859-007 or 859-047 M22520/5-45	
	Dash: -04	Draka Fileca F 4704-4		8	809-015 M22520/2-01	859-072 809-240 M22520/2-37	809-129 M22520/5-01	859-007 or 859-047 M22520/5-45	
	Dash: -05	Tensolite NF22Q100		8	809-015 M22520/2-01	859-072 809-240 M22520/2-37	809-129 M22520/5-01	859-007 or 859-047 M22520/5-45	
854-002-XX	Dash: -01	Tensolite NF26Q100	Skt	8	809-015 M22520/2-01	859-072 809-240 M22520/2-37	809-129 M22520/5-01	859-007 or 859-047 M22520/5-45	859-049 M81969/14-12 Removal
	Dash: -02	Tensolite NF24Q100, PIC E51424		8	809-015 M22520/2-01	859-072 809-240 M22520/2-37	809-129 M22520/5-01	859-007 or 859-047 M22520/5-45	
	Dash: -03	Draka Fileca F 4704-6		8	809-015 M22520/2-01	859-072 809-240 M22520/2-37	809-129 M22520/5-01	859-007 or 859-047 M22520/5-45	
	Dash: -04	Draka Fileca F 4704-4		8	809-015 M22520/2-01	859-072 809-240 M22520/2-37	809-129 M22520/5-01	859-007 or 859-047 M22520/5-45	
	Dash: -05	Tensolite NF22Q100		8	809-015 M22520/2-01	859-072 809-240 M22520/2-37	809-129 M22520/5-01	859-007 or 859-047 M22520/5-45	

MIL-DTL-38999 Series I Type
El Ochito® octaxial "White," "Blue," and "Red" contact specifications

Ochito "White"

1000BASE-T/10GBASE-T

El Ochito® "White" octaxial contacts provide 10 Gigabit Ethernet in the same size as 100BASE-T Quadrax contact

- **-65°C to +175°C**
- **100 ohms**
- **24 and 26 AWG**
- **Type I and Type II**

Ochito "Blue"

SuperSpeed USB

Low-dielectric material. Up to 5 Gbps. 90 ohms. El Ochito® "Blue" octaxial contacts provide an aerospace-grade solution for SuperSpeed USB.

- **-65°C to +125°C**
- **90 ohms**
- **Type I only**

Ochito "Red"

HDMI, Displayport, SATA

Low-dielectric material. Up to 5 Gbps. 100 ohms. El Ochito® "Red" octaxial contacts provide an aerospace-grade solution for multi-gigabit data rates.

- **-65°C to +125°C**
- **100 ohms**
- **26 AWG**
- **Type I only**

SPECIFICATIONS

Specifications

- Operating temperature:
  El Ochito® White: -65° to +175°C
  El Ochito® Blue: -65° to +125°C
  El Ochito® Red: -65° to +125°C
- Impedance:
  El Ochito® White: 100 ohms
  El Ochito® Blue: 90 ohms
  El Ochito® Red: 100 ohms
- DWV: 500 Vrms
- Current Rating: 1.5 A
- IR: 5000 megohms min.
- Durability: 500 mating cycles
- Vibration: MIL-DTL-38999 Series III
- Shock: MIL-DTL-38999 Series III

Construction

- Inner contacts, outer contact, ferrules, retaining nut: copper alloy, 50 microinches gold over nickel plating
- Insulators:
  El Ochito® White: PPS, natural color
  El Ochito® Blue: low-dielectric constant thermoplastic, blue
  El Ochito® Red: low-dielectric constant thermoplastic, red
- O-ring: fluorosilicone
- Heatshrink tubing: PVDF
- Contact release sleeve: stainless steel, passivated
- Sealing boot grommet: fluorosilicone
- Sealing boot body: rigid thermoplastic, PEI or equivalent
- Spline, El Ochito® White: copper alloy, nickel plating
- Spline, El Ochito® Red and Blue: Polyimide

Contact and Cable Options*

Wire Size	Cable Type	Cable: Glenair Part No. (Mfgr. P/N)	Cable: Cable Dia.	Type I Ochito: Pin Contact Assembly Instr.	Type I Ochito: Skt Contact Assembly Instr.	Type II Ochito: Pin Contact Assembly Instr.	Type II Ochito: Skt Contact Assembly Instr.
1000BASE-T, 10GBASE-T; El Ochito "White"							
24	S/UTP	963-037-24 (PIC E6A3824)	.260 (6.60)	--	--	858-005-03B AI85097-03	858-006-03B AI85097-03
	S/FTP	963-033-24 (Gore RCN9047-24)	.260 (6.60)	--	--	858-005-04B AI85097-04	858-006-04B AI85097-04
26	S/UTP	963-003-26 (PIC E6A3826)	.220 (5.56)	858-003-01F AI85048-01	858-004-01F AI85048-01	858-005-01B AI85097-01	858-006-01B AI85097-01
	S/FTP	963-033-26 (Gore RCN9047-26)	.220 (5.56)	858-003-02F AI85048-02	858-004-02F AI85048-02	858-005-02B AI85097-01	858-006-02B AI85097-01
SuperSpeed USB; el Ochito "Blue"							
26	USB 3.0	963-118	.217 (5.51)	858-028-01F AI85114-02	858-029-01F AI85114-02	858-069-01B AI85158-01	858-070-01B AI85158-01
	USB 3.0	963-110	.236 (5.99)	858-028-02F AI85090-01	858-029-02F AI85090-01	858-069-02B AI85158-02	858-070-02B AI85158-02
HDMI, Displayport and SATA; el Ochito "Red"							
26	Cat 6a S/FTP	963-033-26 (Gore RCN9047-26)	.220 (5.56)	858-030-02F AI85048-02	858-031-02F AI85048-02	858-063-01B AI85149-02	858-064-01B AI85149-02
24	Cat 6a S/FTP	963-033-24	.217 (5.51)	--	--	858-063-02B AI85149-04	858-064-02B AI85149-04

*El Ochito contacts ordered from this table include shrink boot.

© 2025 Glenair, Inc • 1211 Air Way, Glendale, CA 91201 • 818-247-6000 • www.glenair.com • U.S. CAGE code 06324 •

MIL-DTL-38999 Series I Type
El Ochito® octaxial pin and socket contacts

El Ochito® Type I Pin Contact 858-003, 858-028, and 858-030

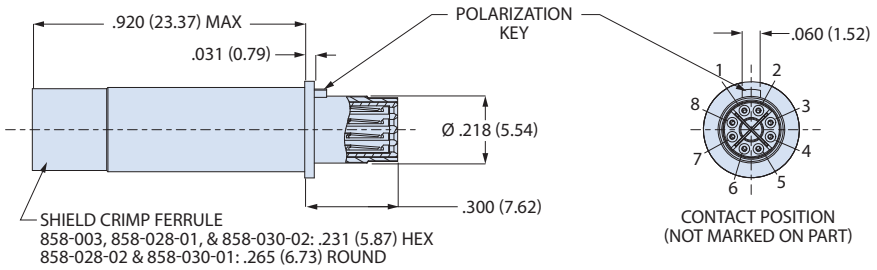

El Ochito® Type I Socket Contact 858-004, 858-029, and 858-031

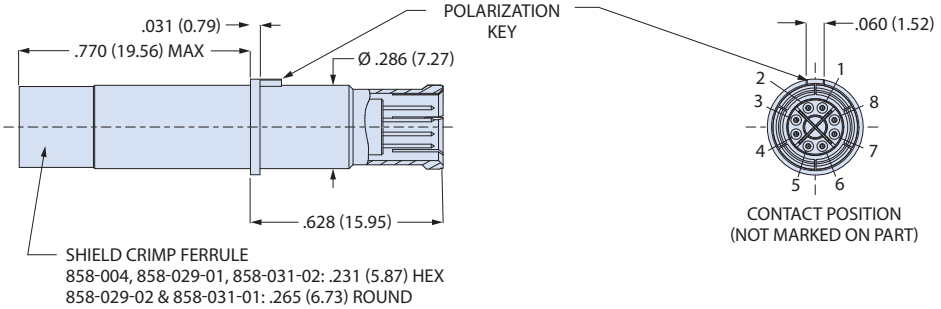

El Ochito® White Type II Pin Contact 858-005

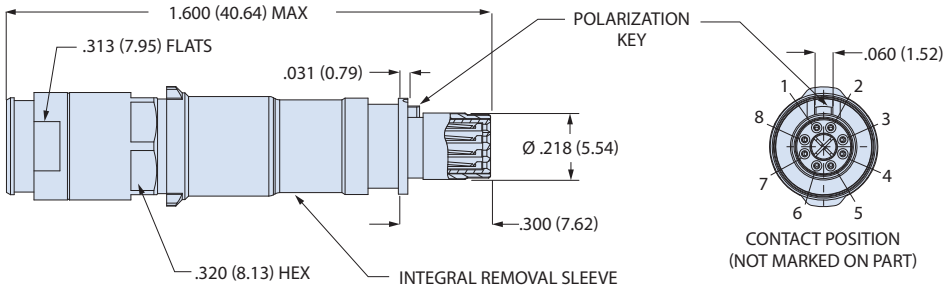

El Ochito® White Type II Socket Contact 858-006

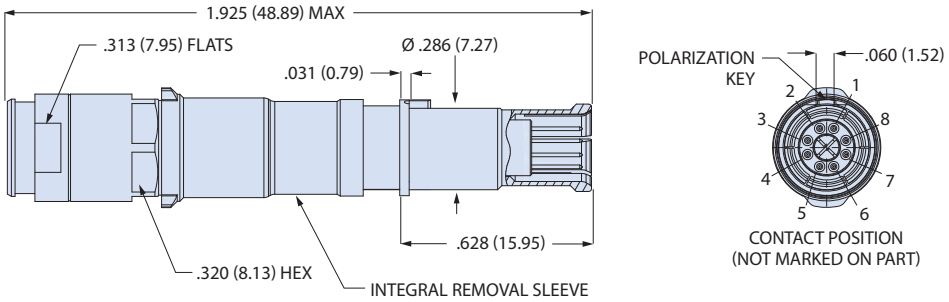

MIL-DTL-38999 Series I Type
El Ochito® octaxial pin and socket contacts

El Ochito® Blue Type II Pin Contact 858-069

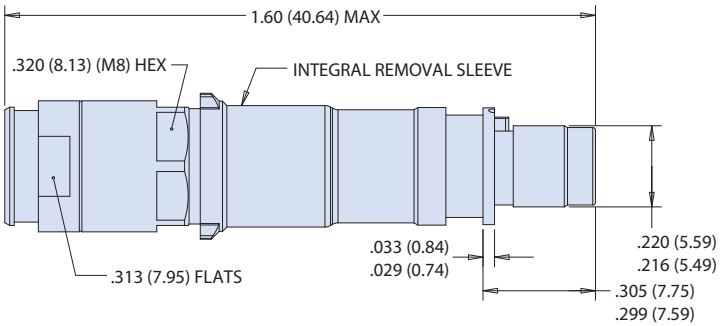

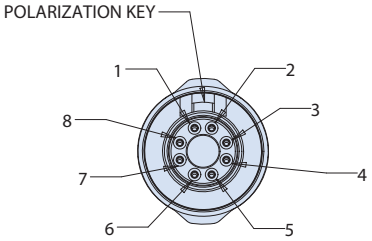

El Ochito® Blue Type II Pin Contact 858-070

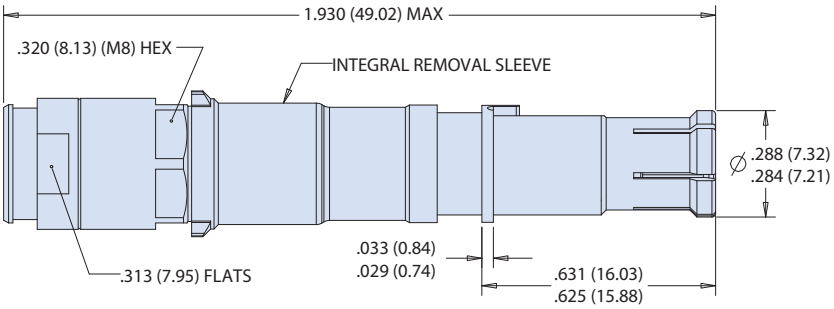

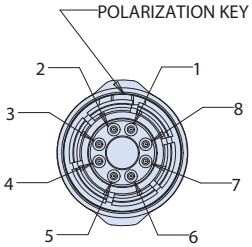

El Ochito® Red Type II Pin Contact 858-063

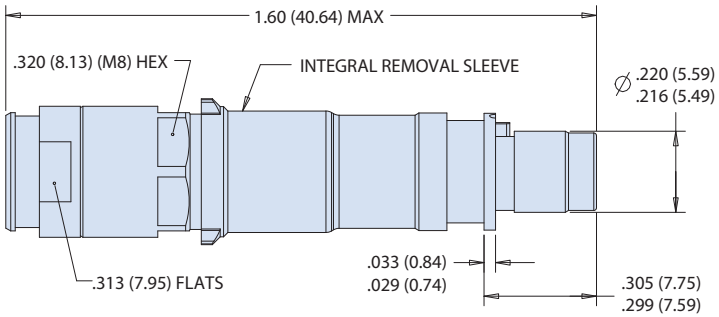

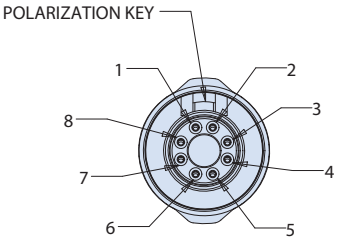

El Ochito® Red Type II Socket Contact 858-064

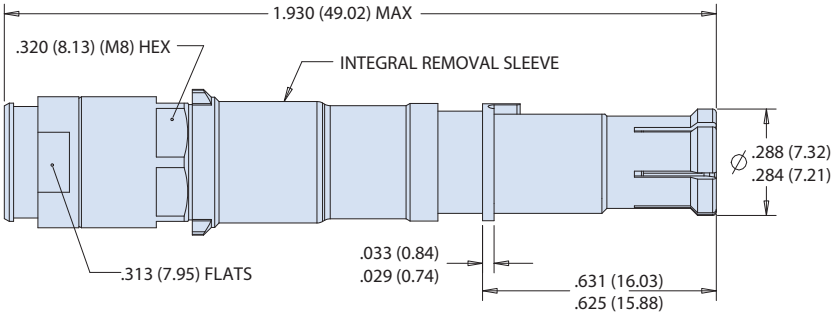

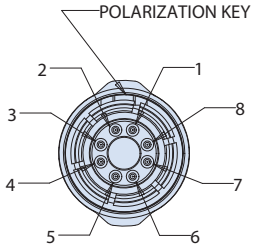

© 2025 Glenair, Inc • 1211 Air Way, Glendale, CA 91201 • 818-247-6000 • www.glenair.com • U.S. CAGE code 06324 •

MIL-DTL-38999 Series I Type
El Ochito® octaxial contact and cable assembly tools and accessories

Assembly Tools

Contact PN	Inner Contact Crimp		Cable Shield Hex Crimp		Cable Shield Round Crimp			Key Alignment Tool	Rear Ferrule Insertion Tool
	Tool	Positioner	Tool	Hex Die	Tool	Positioner 1	Positioner 2		
858-003	809-015	859-101	809-129	859-007				600-236	600-242
858-004	809-015	859-101	809-129	859-007				600-235	600-242
858-005	809-015	859-101						600-236	
858-006	809-015	859-101						600-235	
858-028-01	809-015	859-101	809-129	859-007				600-236	600-242
858-028-02	809-015	859-101			859-134	859-184-2	859-184-3	600-236	600-242
858-029-01	809-015	859-101	809-129	859-007				600-235	600-242
858-029-02	809-015	859-101			859-134	859-184-1	859-184-2	600-235	600-242
858-030-02	809-015	859-101	809-129	859-007				600-236	600-242
858-031-02	809-015	859-101	809-129	859-007				600-235	600-242

Inner Contact Crimp Tools		Cable Shield Crimp Tools				Removal Tool
		Hex Crimp		Round Crimp		
					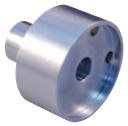	
809-015 (M22520/2-01)	859-101 (K1906)	809-129 (M22520/5-01)	859-007 (M22520/5-45)	859-134 (GS206)	859-184 (M22520/31-02)	859-049 (M81969/14-12)

Key Alignment Tools		Rear Ferrule Insertion Tool
		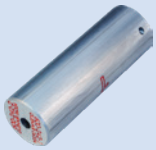
600-235 **600-243** Socket contact	**600-236** **600-244** Pin contact	**600-242**

Contact factory for available alignment inspection tools for use with existing assemblies.

SEALING BOOT

An "F" suffix in the contact part number indicates the contact is supplied with a sealing boot. To order these contacts without sealing boots, delete the "F" suffix from the part number. Sealing boots are not supplied with 858-005, 858-006, 858-009, 858-010, 858-035, 858-037, 858-038 and 858-039 contacts.

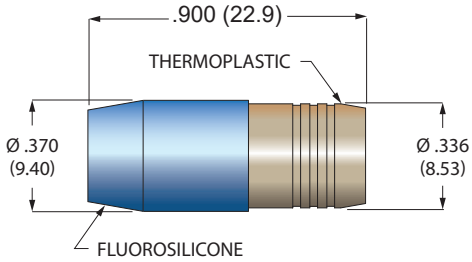

SEALING BOOT FOR OCHITO CONTACTS

687-754-8-8
FOR .220 (5.56) DIAMETER CABLES
687-754-8-9
FOR .236 (6.0) DIAMETER CABLES

MIL-DTL-38999 Series I Type
600-280 El Ochito® contact termination/installation kit

600-028 tool kit combines all the tools necessary to terminate El Ochito red, blue, and white contacts. Great for customers looking to terminate El Ochito® contacts to cables. Unit includes portable protective case with cutout foam for ease of transportation. Order by kit level for simplified ordering. Customize tool kit contents to meet your specific requirements. Additional foam cutout cavities allow for easy kit upgrades as you increase your El Ochito tool collection.

Part Number Development			
Sample Part Number	**600-280**	**-01**	
Product	**600-280** = El Ochito Installation Tool Kit		
Kit Number	**-01 =** Basic Assembly **-04** = Basic Assembly + Crimp Dies, and Positioners **-07 =** Basic Assembly+ Crimp Dies, Positioners and Crimp Tools		
Modifier	**Omit** = None **H** = Hex Crimp Only (See Table I)		

Kit 01: Basic Kit	
-01	
Tool Description	**P/N**
Socket El Ochito Alignment Tool	600-235
Pin El Ochito Alignment Tool	600-236
Ferrule Inserter	600-242

Table I: Items Removed By Modifier "H"[1]	
Tool Description	P/N
859-134 (GS206) Positioner 1	859-184-1
859-134 (GS206) Positioner 2	859-184-2
859-134 (GS206) Positioner 3	859-184-3
Circle Body Crimper (GS206)	859-134

Kit -04: Basic Kit + Crimp Dies & Positioners	
-04	
Tool Description	**P/N**
Socket El Ochito Alignment Tool	600-235
Pin El Ochito Alignment Tool	600-236
Ferrule Inserter	600-242
Contact Positioner (K1906)	859-101
Body Hex Crimp Die (M22520/5-45)	859-007
859-134 (GS206) Positioner 1	859-184-1
859-134 (GS206) Positioner 2	859-184-2
859-134 (GS206) Positioner 3	859-184-3
Removal Tool (M81969/14-12)	859-049

Kit -07: Basic Kit + Crimp Dies & Positioners, and Crimp Tools	
-07	
Tool Description	**P/N**
Socket El Ochito Alignment Tool	600-235
Pin El Ochito Alignment Tool	600-236
Ferrule Inserter	600-242
Contact Positioner (K1906)	859-101
Body Hex Crimp Die (M22520/5-45)	859-007
859-134 (GS206) Positioner 1	859-184-1
859-134 (GS206) Positioner 2	859-184-2
859-134 (GS206) Positioner 3	859-184-3
Removal Tool (M81969/14-12)	859-049
Contact Crimper (M22520/2-01)	809-015
Hex Body Crimper (M22520/5-01)	809-129
Circle Body Crimper (GS206)	859-134

NOTES

- Modifier "H" Removes all tools and dies associated with the circle body crimp. See Table II.
  Not applicable to "-01".

© 2025 Glenair, Inc • 1211 Air Way, Glendale, CA 91201 • 818-247-6000 • www.glenair.com • U.S. CAGE code 06324 •

MIL-DTL-38999 Series I Type
Crimp tools and positioners

MINIATURE ADJUSTABLE CRIMP TOOLS

809-015

809-015 (M22520/2-01) Standard crimper. Use with standard #23, #22D and #20HD contacts, and with M39029/59 and /60 coaxial center contacts. Requires positioner, ordered separately. These crimp tools perform precision eight indent crimps for gas tight wire terminations and excellent tensile strength. Adjustment wheel has 8 settings. Ratchet mechanism prevents improper crimps. Use with bayonet type positioners. Check calibration with M22520/3 gages. Length is 6.75 inches, weight is approx. 10 oz.

Part Number	Military Part Number	Daniels Part Number
809-015	M22520/2-01	AFM8

Positioners for use with 809-015 miniature adjustable crimp tool. These bayonet-type positioners hold contacts at correct height for crimping with M22520/2 type miniature step adjustable tools, above. Face plate shows correct tool settings.

Glenair Part Number	Military Part Number	Daniels Part Number	For Crimping
859-210	M22520/2-13	K338	Size #23 M39029/18-177 contacts. For use with #22-#28 AWG cable.
859-211	M22520/2-16	K339	Size #23 M39029/17-172 socket contact. For use with #22-#28 AWG cables range.
809-369	M22520/2-07	K40	#22 contacts, Series III, Socket.
859-018	M22520/2-09	K42	#22 contacts, Series III, Pin.
	M22520/2-10	K43	#20 contacts, Series III.
809-125	M22520/2-35	K532-1	#16 M39029/76 and /77 coax inner contact.
859-006	(none)	K1430	#12 M39029/102 inner contact.
859-123	(none)	K1457	#12 M39029/103 inner contact.
859-050	M22520/2-31	K406	#8 M369029/59 and /60 coax (50 ohm) inner contacts. For use with RG180 cable.
809-240 or 859-072	M22520/2-37	K709	#8 coax (75 ohm) inner contact. For use with coax, twinax, and quadrax contacts .
859-101		K1906	#8 el Ochito ® contacts.

CRIMP TOOL AND POSITIONER FOR #16 COAXIAL OUTER CONTACT

809-127

809-126

For crimping size #16 shield sleeves. These mil spec approved tools feature a ratchet mechanism to prevent damage from over crimping. Check calibration with M22520/3 gage.

809-127 Crimp tool for use with size #16 coaxial contacts. Blue handles. 9.75 inches OAL, 1.25 pounds.

809-126 Positioner for use with size #16 coaxial contacts. Use with 809-127 (M22520/4-01) crimp tool.

Part Number	Military Part Number	Daniels Part Number
809-127 Crimper	M22520/4-01	GS100-1
809-126 Positioner	M22520/4-02	GP295

MIL-DTL-38999 Series I Type
Crimp tools and positioners for power and coaxial contacts

CRIMP TOOL AND POSITIONER FOR #12, #16, AND #20 POWER CONTACTS, CRIMP ADAPTERS

809-136 Crimp tool for use with size #20, #16 and #12 power pins. 9.75 inches OAL, 1.25 pounds. Use with M39029/57 and /58 contacts and 809-093 adapters.

Positioner for use with size #20, #12 and #16 Power contacts.

Part Number	Military Part Number	Daniels Part Number
809-136 Crimper	M22520/1-01	AF8
809-137 Positioner	M22520/1-04	TH163

PARALLEL ACTION CRIMP TOOL AND HEX DIE SET FOR #12 AND #8 COAX CONTACTS

809-129 Parallel action tool for use with hex crimp dies. 11 inches OAL, 2.0 pounds. Anodized aluminum frame, steel mechanism, plastic handles. Includes tool for die set extraction. Accepts all M22520/5 die sets.

Die set for terminating coaxial shield to outer contact. Use with size #12 matched impedance M39029/102 and 103 type coaxial contacts. Set consists of upper and lower halves. Made of hardened steel with black oxide finish. Die set has two closures.

Part Number	Military Part Number	Daniels Part Number
809-129 Crimper	M22520/5-01	HX4
809-130 Die	M22520/5-03	Y196
859-051 Die	M22520/5-05	Y197
859-047 or 859-007 Die	M22520/5-45	Y143
809-048 Die	M22520/5-105	Y631

CRIMP TOOL AND POSITIONER FOR #8 OCTAXIAL EL OCHITO CABLE SHIELD CRIMP

809-134 crimp tool for size #8 el Ochito® 858-028-02 round crimp shield sleeves. Tool features ratchet mechanism to prevent damage from over crimping. Check calibration with G426 gage.

809-134 Crimp tool for use with size #8 coaxial contacts. Blue handles. 9.75 inches OAL, 1.25 pounds.

859-184 Positioner for use with size #8 el Ochito® 858-028-02 and 858-02-02 (round crimp) octaxial contacts. Use with 809-134 (GS206) crimp tool.

Part Number	Military Part Number	Daniels Part Number
859-134 Crimper	(none)	GS206
859-184 Positioner	(M22520/31-02)	G2P330

© 2025 Glenair, Inc • 1211 Air Way, Glendale, CA 91201 • 818-247-6000 • www.glenair.com • U.S. CAGE code 06324 •

MIL-DTL-38999 Series I Type
Insertion and extraction tools and retention tester

CONTACT INSERTION AND EXTRACTION TOOLS

Size	Type	Part Number	Military Part Number	Daniels Part Number
#23	Insertion/Extraction	(None)	M81969/1-05	(None)
#23	Insertion/Extraction	(None)	M81969/16-04	(None)
#22	Insertion/Extraction	**859-163**	M81969/14-01	(None)
#20	Insertion/Extraction	**809-207**	M81969/14-10	(None)
#16	Insertion/Extraction	**809-131**	M81969/14-03	(None)
#12	Insertion/Extraction	**809-132**	M81969/14-04	(None)
#8	Insertion Only	(None)	M81969/14-06	(None)
#8	Extraction Only	**859-049**	M81969/14-12	(None)
#8	Insertion Only	(None)	M81969/8-13	(None)

CONTACT RETENTION TESTER FOR SUPERNINE CONTACTS

Size 23 contact retention tester shown

Check for properly seated contacts with this spring-loaded tester. Apply the tool tip to the mating end of a contact. Push on the handle until the spring compresses to the recommended force. A visual indicator shows full compression. The contact is properly retained if it is not displaced. Pin tips are used with pin contacts. Socket tips are used with socket contacts. Complete kit options available, or order the tips and handles separately.

Description	Part Number	Daniels PN
#23 Handle	**809-107-1**	HT250-2
#23 Pin Tip	**809-107-2**	68-023-01
#23 Socket Tip	**809-107-3**	67-023-01
Complete Kit	**809-107-4**	(None)
#22 Handle		HT250-4
#22 Pin Tip		68-016-01
#22 Socket Tip		67-016-01
Complete Kit		(None)
#20 Handle	**809-370-1**	HT250-4
#20 Pin Tip	**809-370-2**	68-020-01
#20 Socket Tip	**809-370-3**	67-020-01
Complete Kit	**809-370-4**	(None)
#16 Handle	**809-371-1**	HT250-4
#16 Pin Tip	**809-371-2**	68-016-01
#16 Socket Tip	**809-371-3**	67-016-01
Complete Kit	**809-371-4**	(None)
#12 Handle	**809-372-1**	HT250-4
#12 Pin Tip	**809-372-2**	68-012-01
#12 Socket Tip	**809-372-3**	67-012-01
Complete Kit	**809-372-4**	(None)

WEIGHT / COST-SAVING

Dummy Contact Sealing Plugs (DCSP)

For reliable sealing of unused contact cavities—without the use of electrical contacts

The use of color-coded M27488 type plastic sealing plugs in unused contact cavities is a requirement in all environmental interconnect applications (IAW NA01-1A-505-1, WP 007 00 or 020 00). Conventional sealing plugs, combined with the connector grommet seal, provide reliable dust and moisture ingress protection. But common contact sealing plugs still require that a properly-sized electrical contact be first inserted into the cavity, followed by the plastic plug. Glenair innovative Dummy Contact Sealing Plugs (DCSP) eliminate the need to use expensive electrical contacts as part of the sealing regimen. Fast and easy-to-install, these longer form-factor Dummy Contact Sealing Plugs (DCSP) are a one-piece solution to contact cavity sealing that results in significant weight reduction, material cost reduction, and assembly labor. Available in Size #23 to Size #8, for connector series D38999, Glenair Dummy Contact Sealing Plugs reduce weight as much as 90% compared to conventional contact/sealing plug configurations.

- **Powerful tool in Electrical Wire Interconnect System weight reduction**
- **Eliminates use of expensive electrical contacts for sealing-only applications**
- **Leverages connector contact clip for secure retention of the sealing plug—no possibility of FOD**
- **Easy-to-install single piece design**
- **Visible quality control / confirmation of cavity fill from back of connector**
- **EWIS compliant test report available, ref. GT 15-106**

© 2025 Glenair, Inc • 1211 Air Way, Glendale, CA 91201 • 818-247-6000 • www.glenair.com • U.S. CAGE code 06324 •
SuperNine MIL-DTL-38999 Series I Type

MIL-DTL-38999 Series I Type
Dummy contact sealing plugs (DCSP)

Dummy Contact Sealing Plug (DCSP) Weight Savings: Size #20 Contact Arrangements

MIL-DTL-38999 Insert Arrangment					Spare Socket Cavity Components				Spare Pin Cavity Components				Mated Pair
Shell Size	Arrangment	Available Cavities	Filled Cavities	Percent Fill	Socket Contact M39029/56-351	Sealing Plug MS27488-20-2	Dummy Contact 680-116-20	Weight Savings	Pin Contact M39029/58-363	Sealing Plug MS27488-20-2	Dummy Contact 680-116-20	Weight Savings	Weight Savings
					(grams)	(grams)	(grams)	(grams)	(grams)	(grams)	(grams)	(grams)	(grams)
9	98	3	2	67	0.50	0.08	0.06	0.52	0.14	0.08	0.06	0.15	0.67
11	98	6	4	67	1.00	0.16	0.12	1.04	0.27	0.16	0.12	0.31	1.34
13	98	10	8	80	1.00	0.16	0.12	1.04	0.27	0.16	0.12	0.31	1.34
15	19	19	14	74	2.50	0.39	0.30	2.59	0.68	0.39	0.30	0.77	3.36
17	26	26	20	77	3.00	0.47	0.36	3.11	0.82	0.47	0.36	0.92	4.03
19	32	32	24	75	4.00	0.62	0.48	4.14	1.09	0.62	0.48	1.23	5.38
21	41	41	32	78	4.50	0.70	0.54	4.66	1.22	0.70	0.54	1.39	6.05
23	55	55	44	80	5.50	0.86	0.66	5.70	1.50	0.86	0.66	1.69	7.39
25	61	61	48	79	6.50	1.01	0.78	6.73	1.77	1.01	0.78	2.00	8.74

Weight Savings per 1,000 Dummy Contact Sealing Plugs (DCSP)

Number of Spare Contact Cavities Sealed	Spare Socket Cavity Components					Spare Pin Cavity Components					Mated Pair	
	Socket Contact M39029/56-351	Sealing Plug MS27488-20-2	Dummy Contact 680-116-20	Weight Savings		Pin Contact M39029/58-363	Sealing Plug MS27488-20-2	Dummy Contact 680-116-20	Weight Savings		Weight Savings	
	(grams)	(grams)	(grams)	(grams)	(lbs)	(grams)	(grams)	(grams)	(grams)	(lbs)	(grams)	(lbs)
1000	500.0	78.0	60.0	518.0	1.14	136.0	78.0	60.0	154.0	0.34	672.0	1.48

Dummy Contact Sealing Plug (DCSP) Weight Savings: Size #22 Contact Arrangements

MIL-DTL-38999 Insert Arrangment					Spare Socket Cavity Components				Spare Pin Cavity Components				Mated Pair
Shell Size	Arrangement	Available Cavities	Filled Cavities	Percent Fill	Socket Contact M39029/56-348	Sealing Plug MS27488-22-2	Dummy Contact 680-116-22	Weight Savings	Pin Contact M39029/58-360	Sealing Plug MS27488-22-2	Dummy Contact 680-116-22	Weight Savings	Weight Savings
					(grams)	(grams)	(grams)	(grams)	(grams)	(grams)	(grams)	(grams)	(grams)
9	35	6	4	67	0.50	0.06	0.07	0.49	0.14	0.06	0.07	0.13	0.62
11	35	13	10	77	0.75	0.09	0.11	0.73	0.22	0.09	0.11	0.20	0.93
13	35	22	16	73	1.49	0.18	0.22	1.46	0.43	0.18	0.22	0.40	1.85
15	35	37	28	76	2.24	0.27	0.32	2.19	0.65	0.27	0.32	0.59	2.78
17	35	55	44	80	2.74	0.33	0.40	2.67	0.79	0.33	0.40	0.73	3.40
19	35	66	52	79	3.49	0.42	0.50	3.40	1.01	0.42	0.50	0.92	4.33
21	35	79	62	78	4.23	0.51	0.61	4.13	1.22	0.51	0.61	1.12	5.25
23	35	100	80	80	4.98	0.60	0.72	4.86	1.44	0.60	0.72	1.32	6.18
25	35	128	102	80	6.47	0.78	0.94	6.32	1.87	0.78	0.94	1.72	8.03

Weight Savings per 1,000 Dummy Contact Sealing Plugs (DCSP)

Number of Spare Contact Cavities Sealed	Spare Socket Cavity Components					Spare Pin Cavity Components					Mated Pair	
	Socket Contact M39029/56-348	Sealing Plug MS27488-22-2	Dummy Contact 687-116-22	Weight Savings		Pin Contact M39029/58-360	Sealing Plug MS27488-22-2	Dummy Contact 680-116-22	Weight Savings		Weight Savings	
	(grams)	(grams)	(grams)	(grams)	(lbs)	(grams)	(grams)	(grams)	(grams)	(lbs)	(grams)	(lbs)
1000	249.0	30.0	36.0	243.0	0.54	72.0	30.0	36.0	66.0	0.15	309.0	0.68

Reference Weights

Component	Weight (g)	Component	Weight (g)
MS27488-22-2	0.030	MS27488-16-3	0.140
M39029/58-360	0.072	M39029/58-364	0.333
M39029/56-348	0.249	M39029/56-352	0.769
Glenair DCSP 660-116-22	0.036	Glenair DCSP 660-116-16	0.140
MS27488-20-2	0.078	MS27488-12-3	0.260
M39029/58-363	0.136	M39029/58-365	0.681
M39029/56-351	0.500	M39029/56-353	1.600
Glenair DCSP 660-116-20	0.060	Glenair DCSP 687-116-12	0.280
		Glenair DCSP 687-821-8	1.800

MIL-DTL-38999 Series I Type
Dummy contact sealing plugs (DCSP)

680-116 DUMMY CONTACT SEALING PLUG FOR D38999

Part Number Development				
Sample Part Number		**680-116**	**-8**	**B**
Series	**680-116** = Dummy contact sealing plug			
Dash No.	See Table I			
Boot Option	**B** = Boot supplied with assembly (dash **-8** only) Omit for none			

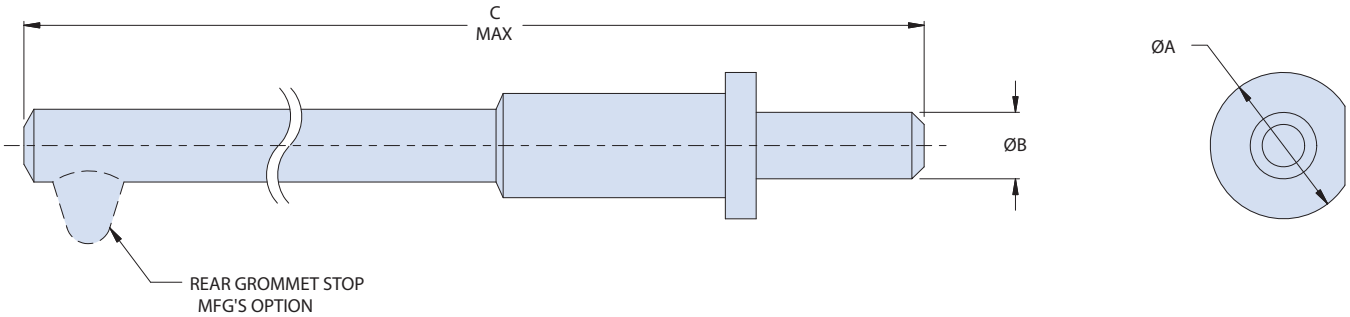

Table I

Contact Cavity Size/Dash Number	Color Code	ØA		ØB		C Max		Extraction Tool	Standard Pkg. Size
		in.	mm	in.	mm	in.	mm		
-8	Green	.315	8.00	.218	5.54	1.51	38.4	M81969/14-06	100
-12	Orange	.181	4.60	.094	2.39	1.18	30.0	M81969/14-04	100
-16	Violet	.128	3.25	.062	1.57	1.18	30.0	M81969/14-03	500
-20	Red	.093	2.36	.040	1.02	1.18	30.0	M81969/14-10	1000
-22	Black	.061	1.55	.030	.76	1.18	30.0	M81969/14-01	1000
-23	White	.054	1.37	.027	.69	1.18	30.0	M81969/1-05	1000

1. Molded plastic material, 200° minimum temperature limit
2. Designed to seal the unused contact cavities of the MIL-DTL-38999 Ser. I, II, III, IV
3. Size 8 dummy contact requires a boot (ref P/N 859-165-02) to seal the cavity of the grommet, supplied by selecting option "B" in the part number
4. Use 859-106 size 8 sealing plug if any of the following conditions are true:
   - mating connector already has quadrax, differential twinax, coax (pin)
     or
   - it is uncertain whether such contacts are already installed or will be installed in the contact cavity

© 2025 Glenair, Inc • 1211 Air Way, Glendale, CA 91201 • 818-247-6000 • www.glenair.com • U.S. CAGE code 06324 •

MIL-DTL-38999 Series I Type
Dummy contact sealing plugs (DCSP)

Connector Series / Size / Color Code / Part Number Selection							
	Crimp Removable Contact Cavity Size						
Connector Series	23	22	20	16	12	8	8 w/ Boot
D38999 Series I, III, IV	680-116-23	680-116-22	680-116-20	680-116-16	680-116-12	680-116-8	680A116-8B

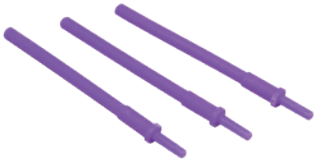

INSTALLATION OF DUMMY CONTACTS

1. Insert Dummy Contacts into unused contact cavities.
   A. Dummy Contacts may be installed using contact insertion tool, needle nose pliers or by hand (space permitting).
   B. Isopropyl alcohol may be used to facilitate insertion of Dummy Contacts.
2. Push Dummy Contact into cavity until flange locks into contact retention clip.
3. Attempt to pull Dummy Contact from connector body to ensure full retention.

Important note: Size #22 and #23 Dummy Contacts In 38999 socket cavities

4. Dummy Contact shall only be inserted into cavity far enough to engage retention clip.
5. Pull Contact back for maximum tail exposure.

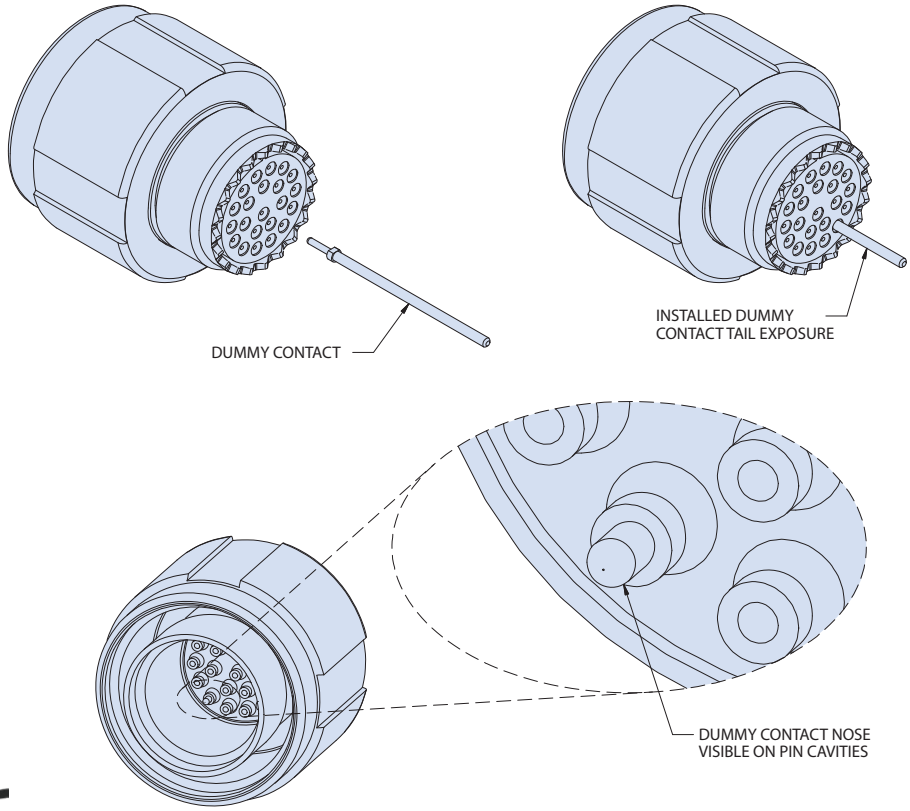

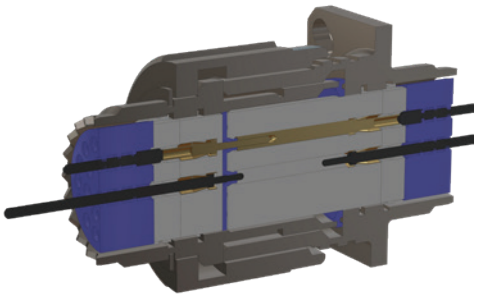

Illustration shows conventional sealing plug / contact configuration (top) and long form-factor Dummy Contact Sealing Plugs (bottom).

MIL-DTL-38999 Series I Type
Size 8 plastic sealing plugs

859-106 SEALING PLUG FOR D38999

Part Number Development			
Sample Part Number		**859-106**	**F**
Series	**859-106** = Dummy contact sealing plug		
Grommet Follower	**F** = Grommit follower; Omit for not		

Plastic sealing plugs are for use in MIL-DTL-38999 Series III arrangements with size 8 catvities. Optional grommet follower is designed to fit Glenair connector grommet.

1. Use 859-106 size 8 sealing plug if any of the following conditions are true:
   - mating connector already has quadrax, differential twinax, coax (pin)

   or
   - it is uncertain whether such contacts are already installed or will be installed in the contact cavity

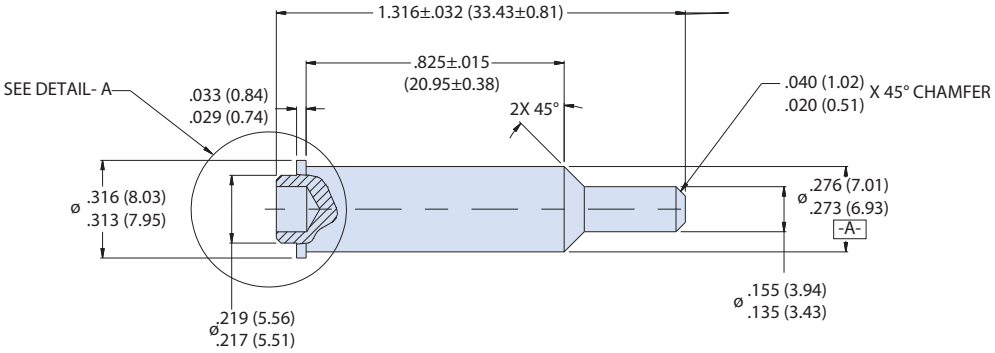

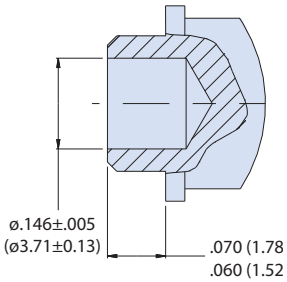

DETAIL-A

© 2025 Glenair, Inc • 1211 Air Way, Glendale, CA 91201 • 818-247-6000 • www.glenair.com • U.S. CAGE code 06324 •

ADVANCED PERFORMANCE

SuperNine® Tools

MIL-DTL-38999 Series I Type Band-Master ATS® banding tool

	Band-Master ATS® Band Selection					
	Length		Part Number		Fits Diameter	
Bands	in.	mm.	Flat	Pre-Coiled	in.	mm.
Short Standard Band	9.0	228.6	601-005	601-006	1.0	25.4
Medium Standard Band	14.0	355.6	601-040	601-041	1.8	47.8
Long Standard Band	18.0	457.2	601-049	601-050	2.5	63.5

Cable Pull Strength					
Name	Material Type	Band Width	Material Thickness	Tool Setting	Cable Pull Strength
Standard	300 SS	0.24″	.020″	150 lbs	160 lbs
Micro	300 SS	0.12″	.015″	80 lbs	80 lbs
Nano	300 SS	0.075″	.010″	35 lbs	100 lbs*

The 601-100 Standard Band-Master ATS® Tool weighs 1.18 lbs., and is designed for standard flat .24″ width clamping bands (601-005, 601-040 and 601-049) in a tension range from 100 to 180 lbs. Calibrate at 150 lbs. ± 5 lbs. for most shield terminations. Tool and band should never be lubricated.

CONTACTS AND TOOLS

SHORT FLAT 601-005 SHORT PRECOILED 601-006

Standard Bands are precision constructed of 300 Series SST/Passivate IAW AMS 2700. Short Standard Bands are 9.00 inches (228.6) in length and designed for use with the Band-Master ATS® 601-100 hand banding tool or the 601-104 pneumatic banding tool. Bands should always be double wrapped and will accommodate diameters up to approximately 1.0 inches (25.4). Quantity packaging is also available: 100 flat (601-007) and 100 pre-coiled (601-008).

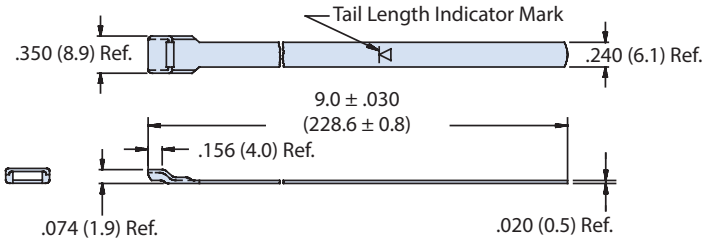

MEDIUM FLAT 601-040 MEDIUM PRECOILED 601-041

Standard Bands are precision constructed of 300 Series SST/Passivate IAW AMS 2700. Medium Standard Bands are 14.0 inches (355.6) in length and designed for use with the Band-Master ATS® 601-100 hand banding tool or the 601-104 pneumatic banding tool. Bands should always be double wrapped and will accommodate diameters up to approximately 1.8 inches (45.7). Quantity packaging is also available: 100 flat (601-042) and 100 pre-coiled (601-043).

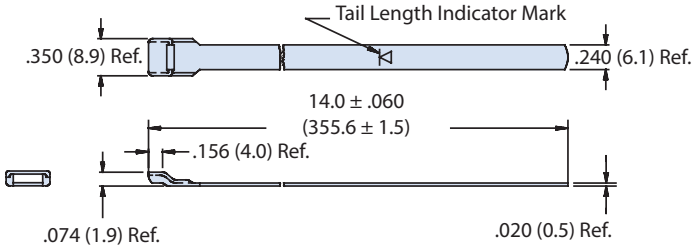

LONG FLAT 601-049 LONG PRECOILED 601-050

Standard Bands are precision constructed of 300 Series SST/Passivate IAW AMS 2700. Long Standard Bands are 18.0 inches (457.2) in length and designed for use with the Band-Master ATS® 601-100 hand banding tool or the 601-104 pneumatic banding tool. Bands should always be double wrapped and will accommodate diameters up to approximately 2.5 inches (63.5). Quantity packaging is also available: 100 flat (601-051) and 100 pre-coiled (601-052).

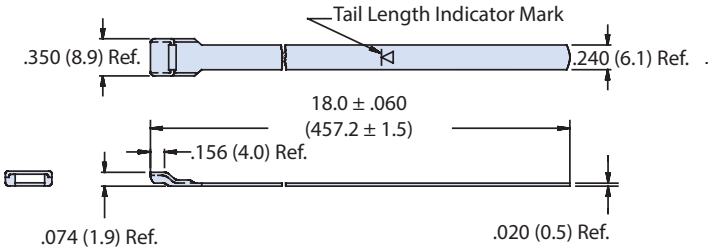

MIL-DTL-38999 Series I Type
600H005 Connector holding tool, plug and receptacle

Part Number Development				
Sample Part Number	**600H005**	**17**	**P**	**N**
Series	**600H005** = Connector holding tool, plug and receptacle			
Shell Size	See Table I			
Contact Style	**P** = Plug Holder **R** = Receptacle Holder			
Polarization	**A**, **B**, **C**, **D** or **E** (N = Normal)			

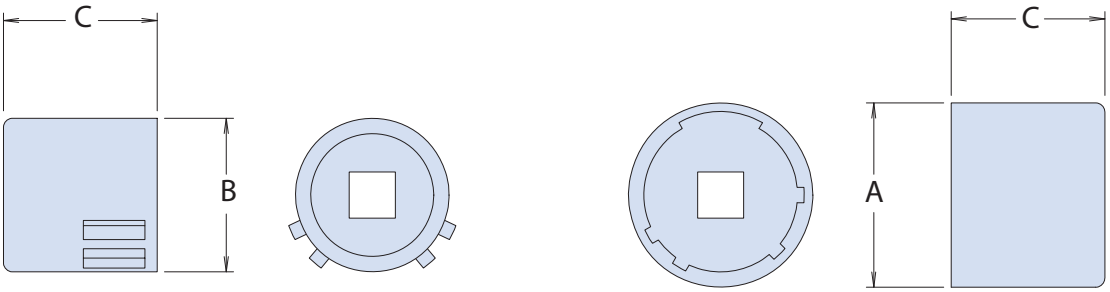

Receptacle Holder

Plug Holder

Dimensions					
Shell Size	A Dia Max	B Dia Max	C Dim Max	Recommended Torque (±5 inch-pounds) Metal	Composite
09	.577 (14.7)	.438 (11.1)	1.031 (26.2)	60	35
11	.709 (18.0)	.566 (14.4)		80	35
13	.829 (21.1)	.678 (17.2)		110	40
15	.954 (24.2)	.803 (20.4)		120	40
17	1.107 (28.1)	.928 (23.6)		120	40
19	1.190 (30.2)	1.033 (26.2)		120	40
21	1.315 (33.4)	1.158 (29.4)		140	80
23	1.440 (36.6)	1.283 (32.6)		140	80
25	1.565 (39.8)	1.408 (35.8)		140	80
25L	1.565 (39.8)	1.408 (35.8)		140	80

NOTES

1. Metric dimensions (mm) are indicated in parentheses.
2. Material: Case hardened carbon steel with electroless nickel finish.
3. Receptacle and plug holder drives: 1/4" - Shell sizes 09, 11 and 13; 3/8" - Shell sizes 15 and up.
4. Composite values apply when using Glenair 600-091 and 600-007 tools.

© 2025 Glenair, Inc • 1211 Air Way, Glendale, CA 91201 • 818-247-6000 • www.glenair.com • U.S. CAGE code 06324 •

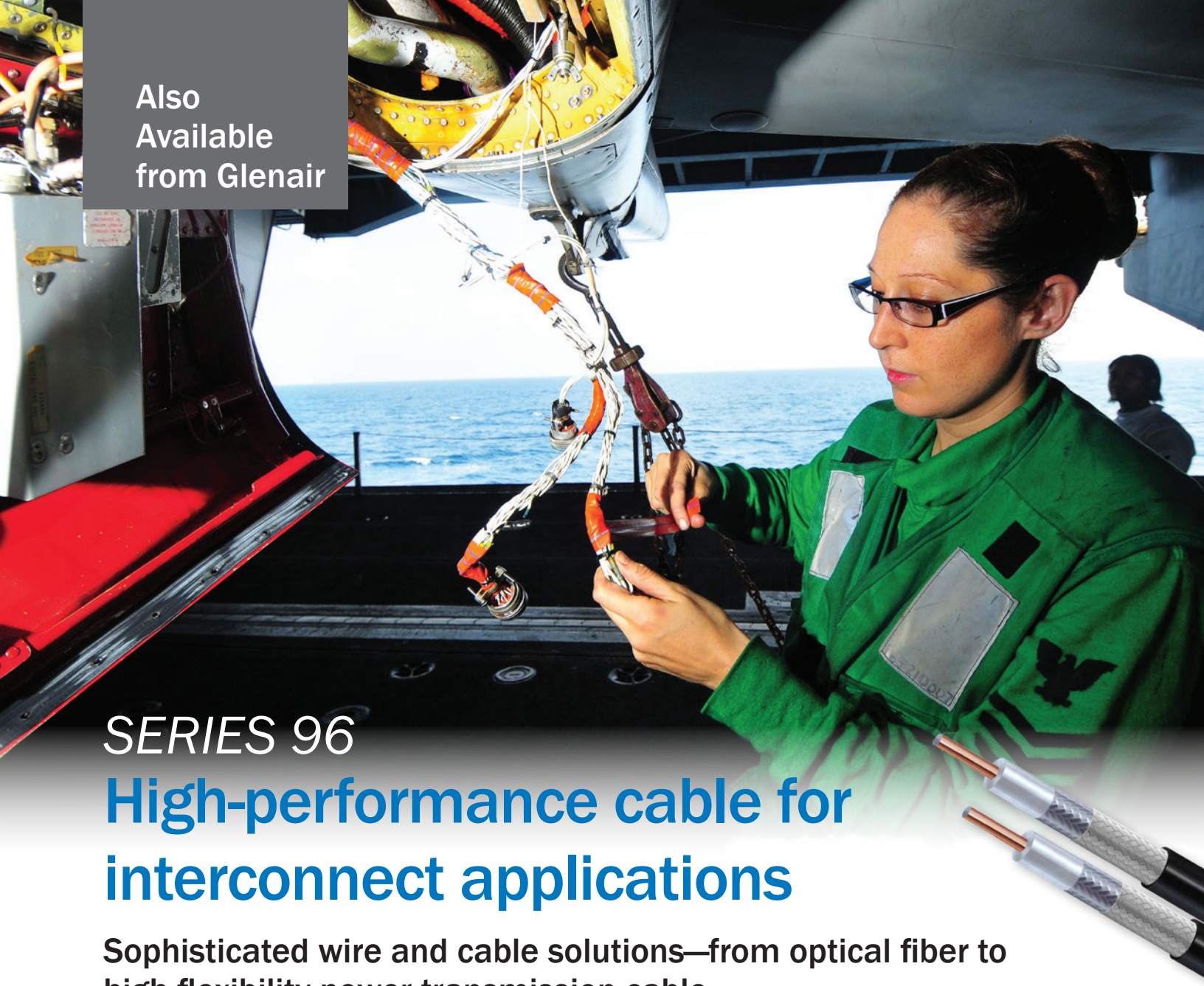

Also Available from Glenair

SERIES 96

High-performance cable for interconnect applications

Sophisticated wire and cable solutions—from optical fiber to high-flexibility power transmission cable

Glenair is unique in the interconnect industry in that we design and manufacture every key component part used in today's most high-performance interconnect harnesses and assemblies. From discrete contacts to connectors, backshells, EMI/RFI shielding, jacketing—and now wire and cable—Glenair manufactures and supplies the full range of requirements.

Introducing Glenair high performance wire and cable: Our line of high-performance wire and cable includes Mil-Spec and commercial variants of commonly specified M22759 type multi-conductor shielded cabling, as well as a full range of Quadrax, Coaxial, fiber optic, and protocol-specific (Ethernet, USB, Firewire and eSATA) cables. We also offer several unique and high-performance cable solutions of our own design for harsh-environment power and signal applications. Best of all, Glenair high-performance wire and cable is offered in short runs with no length or dollar minimums. Fast turnaround—up to and including stock—is our model. Call the factory or visit our website for price and delivery information.

Engineered wire and cable solutions

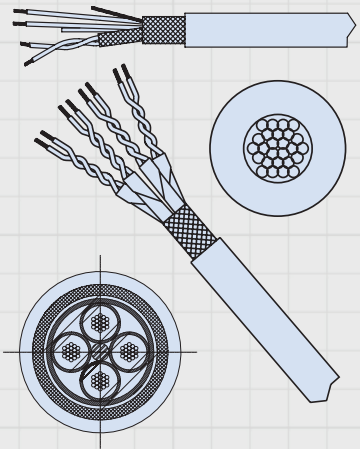

© 2025 Glenair, Inc • 1211 Air Way, Glendale, CA 91201 • 818-247-6000 • www.glenair.com • U.S. CAGE code 06324 •
SuperNine MIL-DTL-38999 Series I Type

MIL-DTL-38999 Series I Type
239-205 O-ring for jam nut receptacle connectors

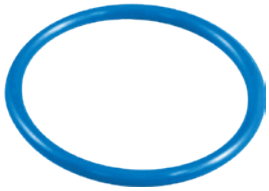

How to Order 239-205				
Sample Part Number	**239-205**	**-09**	**-V**	**2**
Series	Replacement O-ring			
Dash No.	See Table I			
Material	See Table II			
Series Modifier	**2** - Series II D38999 connectors **4** - Series IV D38999 connectors **Omit** - Series I/III D38999 connectors			

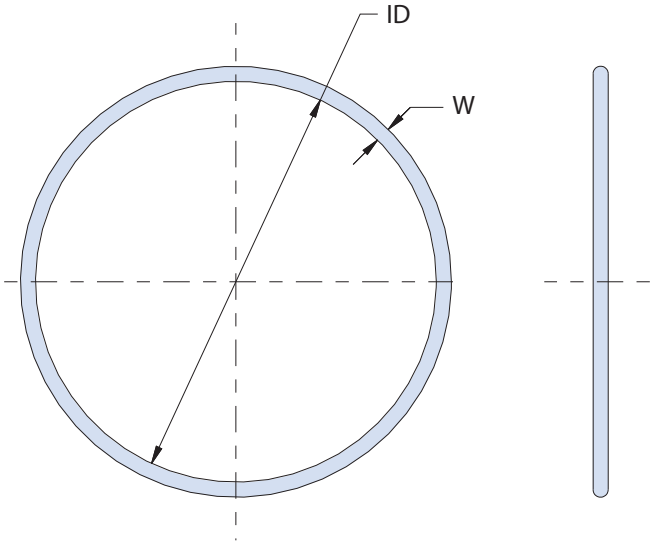

Table I: Dimensions

D38999 SI & SIII	O-Ring ID X W	D38999, SII	O-Ring ID x W	D38999, SIV	O-Ring ID x W
-09	.801 X .070	**-8**	.989 X .070		
-11	.989 X .070	**-10**	1.114 X .070	**-11**	1.114 X .070
-13	1.114 X .070	**-12**	1.239 X .070	**-13**	1.239 X .070
-15	1.239 X .070	**-14**	1.364 X .070	**-15**	1.364 X .070
-17	1.364 X .070	**-16**	1.489 X .070	**-17**	1.489 X .070
-19	1.487 X .103	**-18**	1.614 X .070	**-19**	1.614 X .070
-21	1.612 X .103	**-20**	1.739 X .070	**-21**	1.739 X .070
-23	1.737 X .103	**-22**	1.864 X .070	**-23**	1.864 X .070
-25	1.862 X .103	**-24**	2.114 X .070	**-25**	1.989 X .070

Table II: Material

Sym	Material
B	Butyl
C	Nitrile (Buna-N)
E	EPDM
F	Fluorosilicone
G	CHO-Seal 6435 or equivalent
H	CHO-Seal 1215 or equivalent
N	Neoprene
P	CHO-Seal 1298 or equivalent
R	CHO-Seal 1285 or equivalent
S	Silicone
T	CHO-Seal 6307 or equivalent
V	Viton
W	Viton VX065-75
Z	FFKM perfluoroelastomer (FF580-75)

© 2025 Glenair, Inc • 1211 Air Way, Glendale, CA 91201 • 818-247-6000 • www.glenair.com • U.S. CAGE code 06324 •

MISSION-CRITICAL

INTERCONNECT SOLUTIONS

3D Parts Models

3dparts.glenair.com

Glenair, Inc.
1211 Air Way • Glendale, California • 91201-2497
Telephone: 818-247-6000 • Fax: 818-500-9912
sales@glenair.com • **www.glenair.com**

Glenair East
20 Sterling Drive
Wallingford, CT
06492
Telephone: 203-741-1115
Fax: 203-741-0053
sales@glenair.com

Glenair UK Ltd
40 Lower Oakham Way
Oakham Business Park
Mansfield, Notts
NG18 5BY England
Telephone: +44-1623-638100
sales@glenair.co.uk

Glenair Microway Systems
7000 North Lawndale Avenue
Lincolnwood, IL
60712
Telephone: 847-679-8833
Fax: 847-679-8849

Glenair Nordic AB
Frösundaviks allé 1
SE -169 70 Solna
Sweden
Telephone: +46-8-50550000
sales@glenair.se

Glenair GmbH
Schaberweg 28
61348 Bad Homburg
Germany
Telephone: 06172 / 68 16 0
Fax: 06172 / 68 16 90
info@glenair.de

Glenair Iberica S.L.
Av. De Manoteras, 24 – 2º
28050 Madrid
Spain
Telephone: +34 915 562 687
sales@glenair.es

Glenair Italia S.p.A.
Via Del Lavoro, 7
40057 Quarto Inferiore –
Granarolo dell'Emilia
Bologna, Italy
Telephone: +39-051-782811
Fax: +39-051-782259
info@glenair.it

Glenair France SARL
7, Avenue Parmentier
Immeuble Central Parc #2
31200 Toulouse
France
Telephone: +33-5-34-40-97-40
Fax: +33-5-61-47-86-10
sales@glenair.fr

Glenair Korea
6-21Tapsil-ro 58beon-gil
Giheung-gu, Yongin-si
Gyeonggi-do
Republic of Korea
Telephone: +82-07-5067-2437
Fax: +82-504-375-4549
sales@glenair.kr

Glenair Japan
40F, Nagoya Lucent Tower,
6-1, Ushijima-cho,
Nishi-ku, Nagoya, 451-6040
Japan
Telephone: +81-52-569-2521
Fax: +81-52-569-2523
sales@glenair.jp

© 2025 Glenair, Inc.

Printed in U.S.A.

CAT-185 • July 2025