Series 66 Protective Covers

for MIL-DTL-38999 Series III Connectors

667-448, 667-449 ProSeal™ Flip Lid Receptacle Cover

M38999/III Receptacle Cover

ProSeal™ Flip-and-Spin Lid

ProSeal™ Flip Lid

Spring-loaded, waterproof. ProSeal™ cover fits MIL-DTL-38999 Series III receptacle connectors and Glenair Series 233 SuperNine receptacles. Cover mounts onto standard connector jam nut or square flange mounting holes. Two lid styles are available: ***Flip Lid*** and ***Flip-and-Spin Lid***. Unthreaded flip lid has torsion spring and gimballed cover for dust-tight and water-tight sealing (IP67 rating). Flip-and-spin lid has threaded cover. Snap lid onto connector face, then hand-tighten ¼ turn for IP68 ingress protection plus IPX6 high pressure water spray. -40 to +120 °C.

PART NUMBER

	667-448	C	21	T1	W	-59

Base P/N	**667-448**	Flip-and-Spin Lid
	667-449	Flip Lid
Bracket Finish	**C**	Black Anodize
	M	Electroless Nickel
	MT	Nickel-PTFE
	NF	Cadmium, Olive Drab
	ZR	Black Zinc-Nickel
	TZ	Tin-Zinc

Shell Size

Shell Size	9	11	13	15	17	19	21	23	25
	A	B	C	D	E	F	G	H	J
Size Code	09	11	13	15	17	19	21	23	25

Panel Thickness	**T0**	Front Mount *(not applicable to jam nut mount)*
	T1	.062 (1.6) *+/- .030 (0.8)*
	T2	.125 (3.2) *+/- .030 (0.8)*
Mounting Type	**J**	Jam Nut *(fig. 1)*
	W	Square Flange *(fig. 2)*
Modification Code	*Mod-59 is not available for P/N 667-448*	
	-59	Silver-Filled Silicone EMI Gasket

MATERIALS AND FINISHES

Lid, lever arm, gimbal: thermoplastic, black
Bracket: aluminum, plated per finish code
Spring, pin, rivit: SST/passivate
Sleeve: Delrin
Gasket: silicone
Conductive gasket: silver-filled silicone

Fig. 1
Mounting Type J

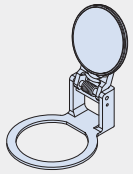

Jam Nut

Fig. 2
Mounting Type W

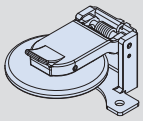

Square Flange

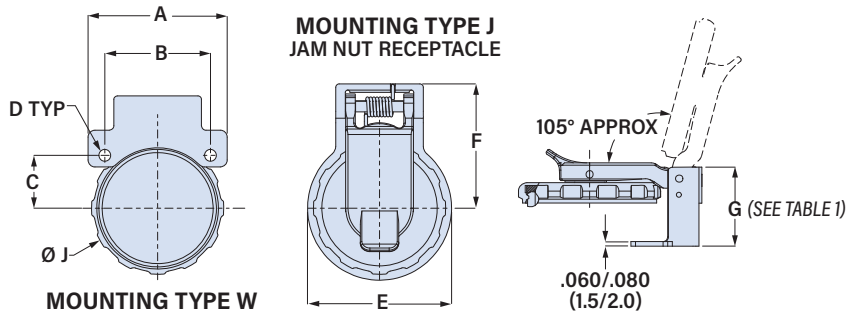

WHEN THE LEVER ARM IS LIFTED TO THE OPEN POSITION, IT WILL REMAIN OPEN AT APPROXIMATELY 105° FROM RECEPTACLE FACE.

TABLE 1 G DIMENSION

Panel Thickness Code		Shell Size	G Dim. ± .06 (1.5) Type J Jam Nut In.	mm.	Type W Square Flange In.	mm.
T0	Front Mount	09-19	N/A	N/A	1.039	26.4
		21-25	N/A	N/A	1.094	27.8
T1	.062 ± .030 (1.6 ± 0.8)	09-19	1.041	26.4	.977	24.8
		21-25	1.126	28.6	1.032	26.2
T2	.125 ± .030 (3.2 ± 0.8)	09-19	.979	24.9	.915	23.2
		21-25	1.064	27.0	.970	24.6

Shell Size	A Max in	A Max mm	B ± .015 (0.4) In.	B mm.	C ± .015 (0.4) In.	C mm.	D ±.008 (.20) In.	D mm.	E ±.031 (.79) In.	E mm.	F Max In.	F Max mm.	ø J Max In.	ø J Max mm.
09 (A)	.937	23.8	.719	18.3	.360	9.1	.128	3.3	1.031	26.2	.841	21.4	.872	22.1
11 (B)	1.031	26.2	.812	20.6	.406	10.3	.128	3.3	1.125	28.6	.903	22.9	.988	25.1
13 (C)	1.126	28.6	.906	23.0	.453	11.5	.128	3.3	1.375	34.9	1.028	26.1	1.129	28.7
15 (D)	1.220	31.0	.969	24.6	.485	12.3	.128	3.3	1.560	39.6	1.113	28.3	1.280	32.5
17 (E)	1.311	33.3	1.062	27.0	.531	13.5	.128	3.3	1.625	41.3	1.149	29.2	1.441	36.6
19 (F)	1.437	36.5	1.156	29.4	.578	14.7	.128	3.3	1.750	44.5	1.365	34.7	1.499	38.1
21 (G)	1.563	39.7	1.250	31.8	.625	15.9	.128	3.3	2.000	50.8	1.429	36.3	1.630	41.4
23 (H)	1.689	42.9	1.375	34.9	.688	17.5	.154	3.9	2.150	54.6	1.491	37.9	1.755	44.6
25 (J)	1.841	46.8	1.500	38.1	.750	19.1	.154	3.9	2.218	56.3	1.656	42.1	1.880	47.8

© 2022 Glenair, Inc • 1211 Air Way, Glendale, CA 91201 • 818-247-6000 • www.glenair.com • U.S. CAGE code 06324 • Circular Connector Accessories
Dimensions in Inches (millimeters) are subject to change without notice.