244-004
MIL-DTL-38999 Series III Type TVS Connector
Rear Panel Mount Receptacle with RJ45 Jack to Rear Solder Cup or PC Tail Termination and Accessory Threads

How to Order							
Sample Part Number	244-004	NF	19	P	G	N	1
Basic Number	244-004						
Finish[1]	See Material & Finish Table						
Shell Size	17 or 19						
Termination	P = PC tail S = Solder cup						
Insert-to-Shell Grounding	G = Shielded and grounded to shell						
Alternate Key Position	Per MIL-DTL-38999 A, B, C, D, E, N = Normal						
RJ45 Orientation	1, 2, 3, or 4						

Materials and Finishes[1]	
NF	Cadmium olive drab
ME	Electroless nickel
MT	Nickel PTFE

NOTES

1. See Section A for alternate key positions, panel cutout dimensions and complete finish options

All external dimensions, features, etc. compliant with D38999/20, /24, &/26. Consult factory for additional information.

RJ45 ORIENTATION CODE AND PCB LAYOUT (PCB LAYOUT FOR PC TAIL VERSION)

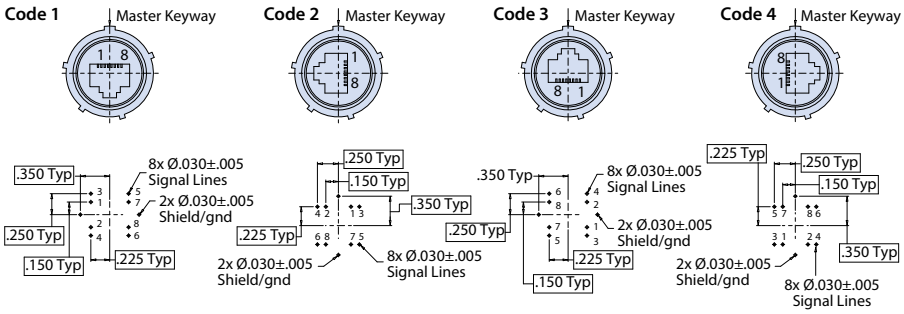

Component Mounting Side

Jam Nut Dimensions									
Shell Size	A Thread	B Sq.		C Bsc		Ø D Min		E Bsc	
		in	mm	in	mm	in	mm	in	mm
17	1.1875-.1P-.3L-TS-2A	1.323 1.299	33.60 32.99	1.062	26.97	1.219	30.96	1.062	26.97
19	1.2500-.1P-.3L-TS-2A	1.449 1.425	36.80 36.195	1.156	29.36	1.297	32.94	1.156	29.36

REAR PANEL MOUNT RECEPTACLE WITH ACCESSORY THREADS

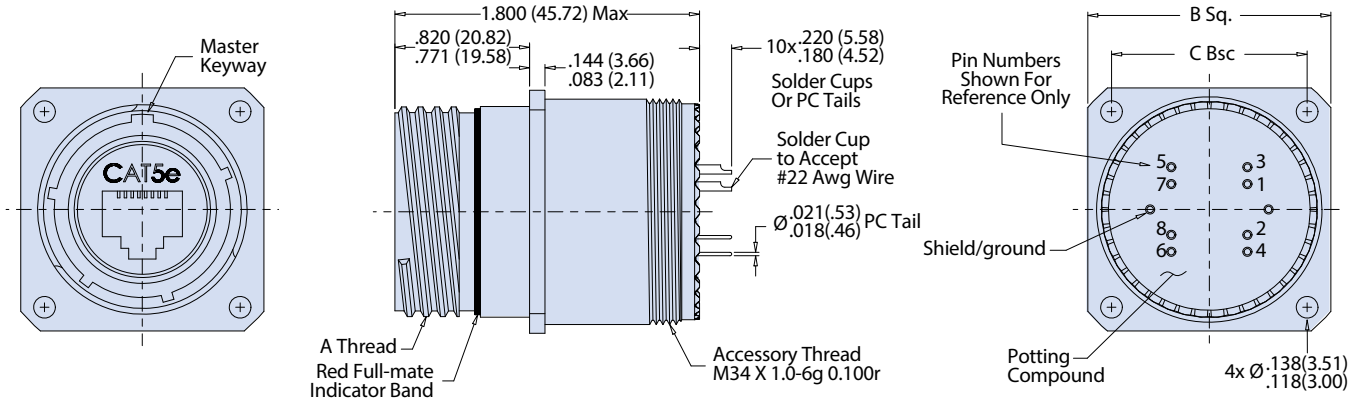

Dimensions in inches (millimeters) and are subject to change without notice.

© 2013 Glenair, Inc.
U.S. CAGE Code 06324
Printed in U.S.A.