947-292
MIL-DTL-26482 Series II Type Hermetic
Bayonet Coupling Jam Nut Mount
Pin-Socket Bulkhead Feedthrough Receptacle

Basic Part Number

Shell Size

Pin/Socket Designator
P = Pin on Jam Nut Side
S = Socket on Jam Nut Side

947-292 ZL 22 - 55 P X

Material/Finish
Z1 = CRES Passivate
ZL = CRES Nickel Plate

Insert Arrangement
Per MIL-STD-1669

Alternate Key Position
W, X, Y or Z
(Omit for Normal)

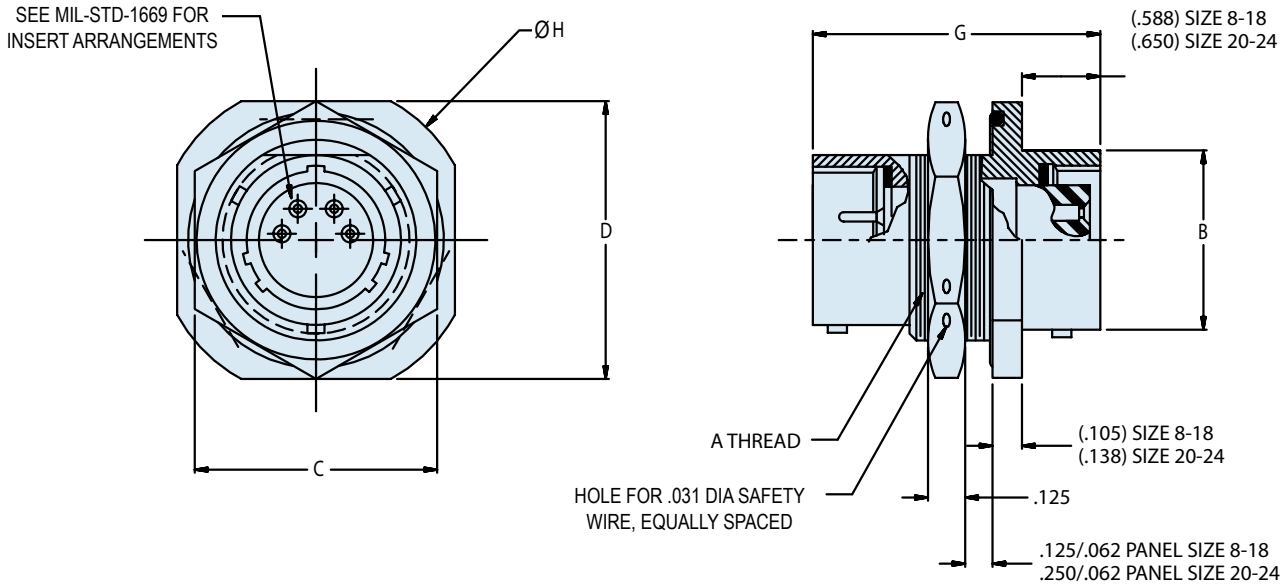

© 2013 Glenair, Inc. U.S. CAGE Code 06324 Printed in U.S.A.

947-292
MIL-DTL-26482 Series II Type Hermetic
Bayonet Coupling Jam Nut Mount
Pin-Socket Bulkhead Feedthrough Receptacle

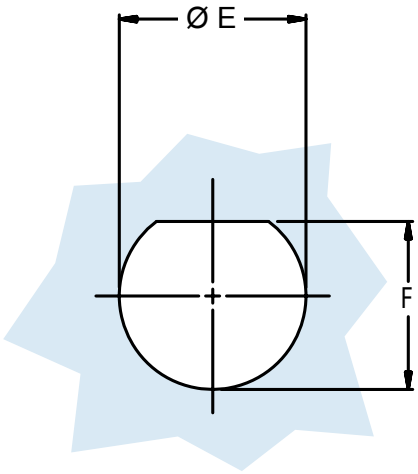

Panel Cut Out

HERMETIC LEAK RATE MOD CODES	
Designator	**Required Leak Rate**
–585A	1 x 10^{-10} cc Helium per second
–585B	1 x 10^{-9} cc Helium per second
–585C	1 x 10^{-8} cc Helium per second

TABLE I: CONNECTOR AND CUT-OUT DIMENSIONS

Shell Size	A Thread Class 2A	B Dia Max	C Hex	D Flats	E Dia +.010 -.005 (+0.3 -0.1)	F Dim +.010 -.005 (+0.3 -0.1)	G Max	H Dia ± .016 (0.4)
8	9/16-24 UNEF	.474 (12.0)	.750 (19.1)	.954 (24.2)	.572 (14.5)	.536 (13.6)	1.420 (36.1)	1.062 (27.0)
10	11/16-24 UNEF	.591 (15.0)	.875 (22.2)	1.078 (27.4)	.697 (17.7)	.661 (16.8)	1.420 (36.1)	1.187 (30.1)
12	7/8-20 UNEF	.751 (19.1)	1.062 (27.0)	1.266 (32.2)	.895 (22.7)	.824 (20.9)	1.420 (36.1)	1.375 (34.9)
14	1-20 UNEF	.876 (22.3)	1.188 (30.2)	1.391 (35.3)	1.010 (25.7)	.948 (24.1)	1.420 (36.1)	1.500 (38.1)
16	1 1/8-18 UNEF	1.001 (25.4)	1.312 (33.3)	1.516 (38.5)	1.135 (28.8)	1.072 (27.2)	1.420 (36.1)	1.625 (41.3)
18	1 1/4-18 UNEF	1.126 (28.6)	1.438 (37.0)	1.641 (41.7)	1.260 (32.0)	1.197 (30.4)	1.420 (36.1)	1.750 (44.5)
20	1 3/8-18 UNEF	1.251 (31.8)	1.562 (39.7)	1.828 (46.4)	1.385 (35.2)	1.322 (33.6)	1.580 (40.1)	1.938 (49.2)
22	1 1/2-18 UNEF	1.376 (35.0)	1.688 (42.9)	1.954 (49.6)	1.510 (13.0)	1.447 (36.8)	1.580 (40.1)	2.062 (52.4)
24	1 5/8-18 UNEF	1.501 (38.1)	1.812 (46.0)	2.087 (53.0)	1.635 (41.5)	1.572 (39.9)	1.620 (41.1)	2.187 (55.5)

APPLICATION NOTES

1. To be identified with manufacturer's name, part number and date code, space permitting.
2. Hermeticity: <1x10^{-7} cc/sec @ 1 ATM differential
3. Material/Finish:
   Shell and jam-nut: Z1 - CRES/passivate.
   ZL - CRES/nickel plate.
   Titanium and Inconel® available. Consult factory.
   Contacts - Alloy 52/gold plate.
   Bayonets - CRES/passivated.
   Insulator - Vitreous glass seal
   Seals - Silicone Elastomer/N.A.
   Spacer - High grade rigid dielectric/N.A.
4. Metric Dimensions (mm) are indicated in parentheses.

© 2013 Glenair, Inc.