GTC connector hardware options

HIGH DENSITY

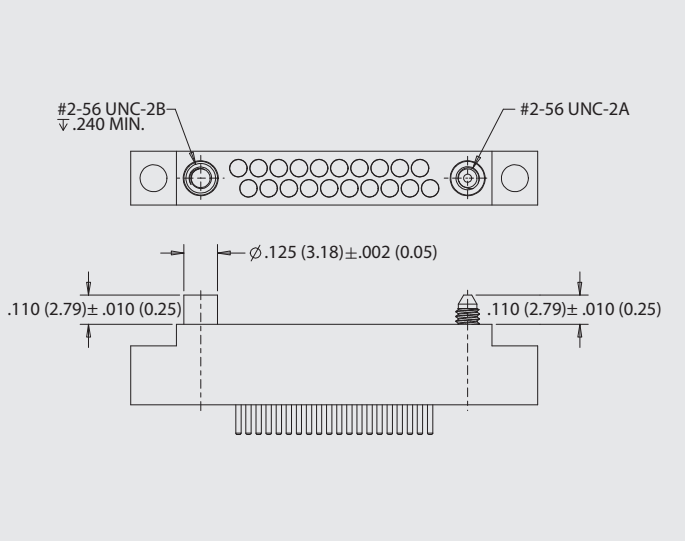

FIGURE 1. FIXED JACKSET (F)

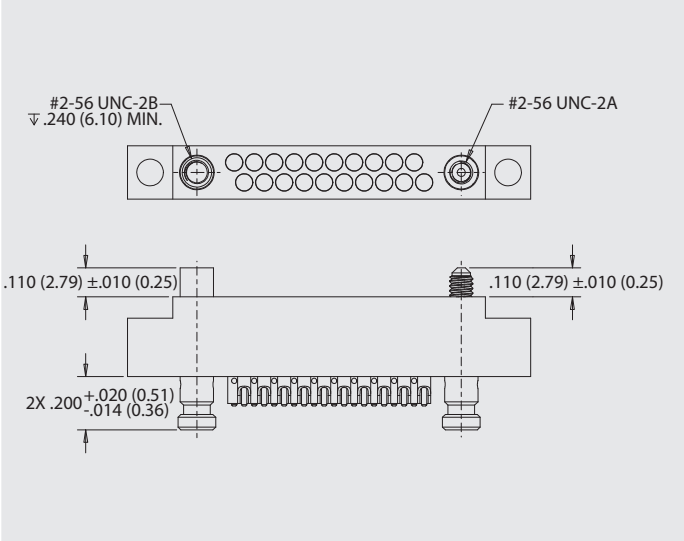

FIGURE 2. TURNING JACKSET, HEX SHORT (S)

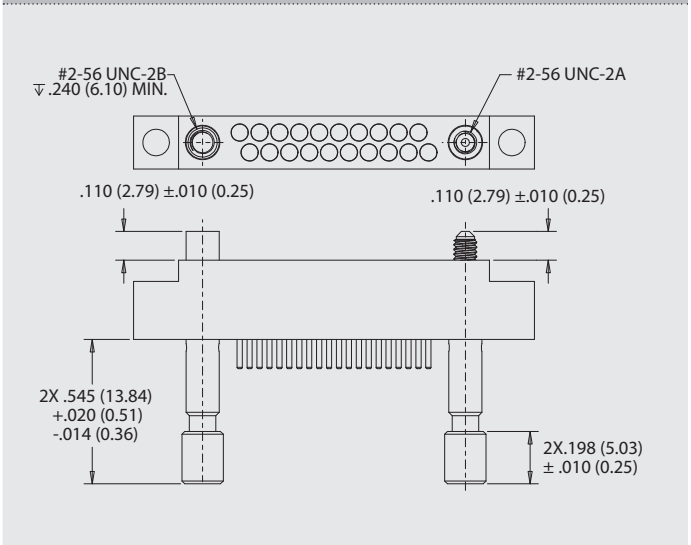

FIGURE 3. TURNING JACKSET, HEX - LONG (N)

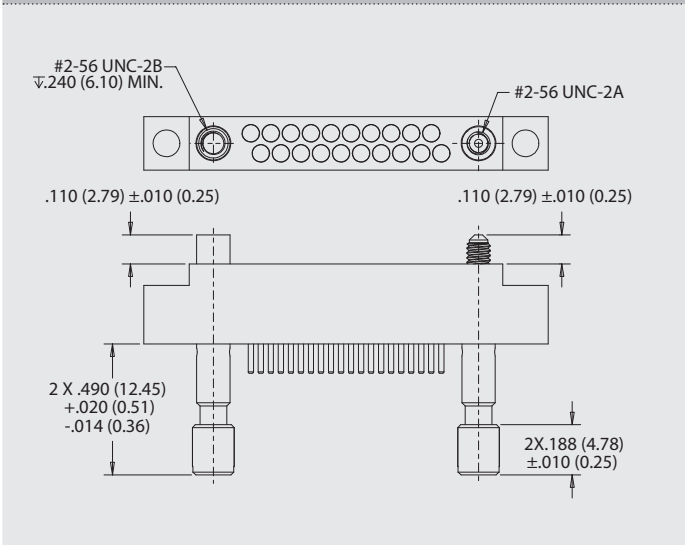

FIGURE 4. TURNING JACKSET, SLOTTED - MED LONG (M)

© 2026 Glenair, Inc • 1211 Air Way, Glendale, CA 91201 • 818-247-6000 • www.glenair.com • U.S. CAGE code 06324 • MIL-DTL-55302 Catalog
Dimensions in Inches (millimeters) are subject to change without notice.

GTC connector hardware options

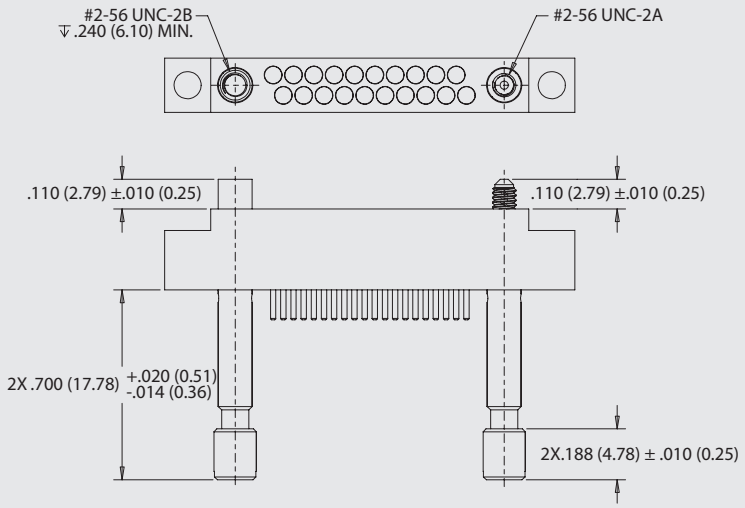

FIGURE 5. TURNING JACKSET, SLOTTED - LONG (L)

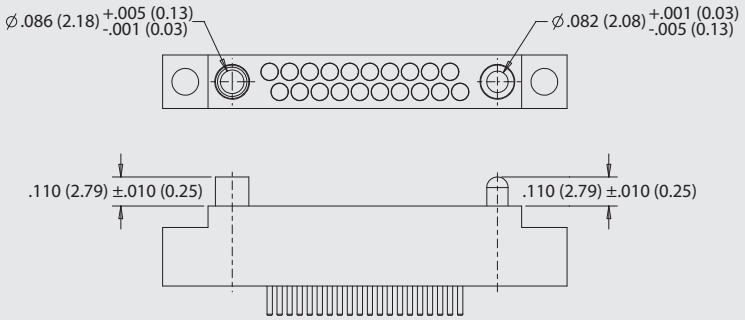

FIGURE 6. GUIDESET FULL ROUND (X)

GTC connector hardware options

HIGH DENSITY

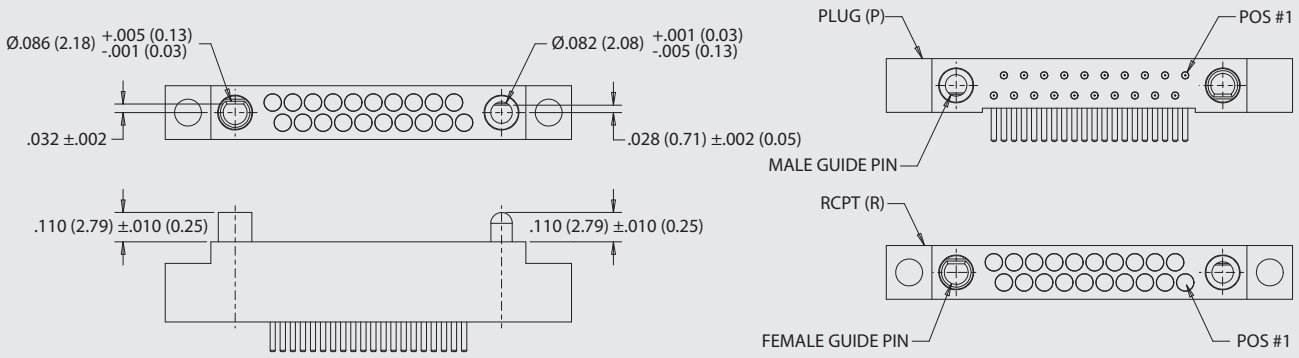

FIGURE 9. GUIDESET, POLARIZED (Y-1)

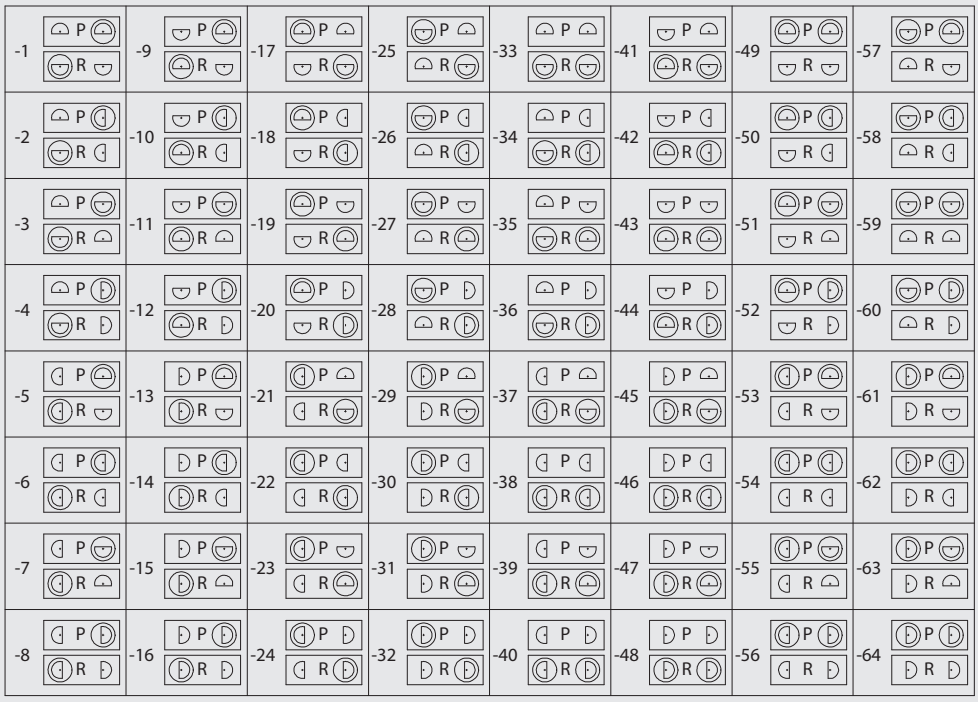

Notes:

- When polarized guide pins are removed and reinstalled in another position, apply Loctite 83-CV or equivalent to the threads. Use spanner wrench (600-229) to reconfigure per Figure 10. Guide sets, as installed, shall withstand 7 in*oz backoff torque applied through the mounting nut.

FIGURE 10. POLARIZATION CONFIGURATION CHART

© 2026 Glenair, Inc • 1211 Air Way, Glendale, CA 91201 • 818-247-6000 • www.glenair.com • U.S. CAGE code 06324 • MIL-DTL-55302 Catalog
Dimensions in Inches (millimeters) are subject to change without notice.