MIL-DTL-38999 Series I Type 870F001 Swing-Arm® saddle clamp

Self-Locking

FEATURES

- Swing-Arm saddle clamp for use with MIL-DTL-38999 Series I and II connectors and unshielded wire bundles
- Coupling nut has anti-decoupling mechanism for audible detented coupling and prevents backoff under high vibration.
- Available in composite, aluminum or stainless steel.
- Adjustable arms pivot to 0°, 45° or 90° positions. Arms have self-locking threaded inserts to withstand high vibration.
- Full radius saddles have self-locking clinch nuts and are available in two clamp sizes: standard clamp fits most wire bundles, large clamp has increased clearance for oversize wire bundles.

HOW TO ORDER

Sample Part Number	870F001	XB	22	B
Basic Part Number	**870F001**			
Finish	**Composite** **XB** = No Finish (Black) **Aluminum** **M** = Electroless Nickel **NF** = Olive Drab Cadmium **MT** = Nickel-PTFR **TZ** = Tin-Zinc **ZR** = Black Zinc-Nickel **Stainless Steel** **Z1** = Passivated			
Shell Size	**09**, **11**, **13**, **15**, **17**, **19**, **21**, **23**, **25**			
Clamp Size	**A** = Standard Clamp **B** = Large Clamp			

MATERIAL/FINISH

Composite (Code XB)
- **Coupling nut, body, arms, saddles:** polyetherimide (PEI), unplated
- **Screws, washers, inserts:** stainless steel/ passivated
- **Anti-decoupling springs:** thermoplastic
- **Clinch Nuts:** stainless steel, silver plated

Aluminum (Codes M, MT, NF, TZ, ZR)
- **Coupling nut, body, arms, saddles:** aluminum
- **Screws, washers, inserts:** stainless steel/ passivated
- **Anti-decoupling springs:** thermoplastic
- **Clinch Nuts:** Codes M, MT, TZ and ZR: stainless steel, silver plated.
  - **Code NF:** stainless steel/ olive drab cadmium

Stainless Steel (Code Z1)
- **Coupling nut, body, arms, saddles:** SST
- **Screws, washers, inserts:** stainless steel/ passivated
- **Anti-decoupling springs:** stainless steel
- **Clinch Nuts:** stainless steel, silver plated

ALUMINUM AND SST VERSIONS

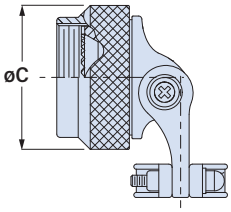

Aluminum and stainless steel versions have round knurled coupling nuts.

CLAMP DIMENSIONS

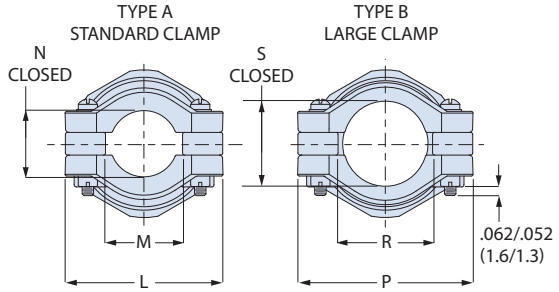

Standard Clamp				Large Clamp			
Shell Size	L Max	M Min	N Ref.	Shell Size	P Max	R Min	S Ref.
08	.98 (24.89)	.22 (5.59)	.265 (6.73)	08	.98 (24.89)	.33 (8.38)	.356 (9.04)
10	1.05 (26.67)	.27 (6.86)	.310 (7.87)	10	1.20 (30.48)	.45 (11.43)	.422 (10.72)
12	1.20 (30.48)	.35 (8.89)	.422 (10.72)	12	1.45 (36.83)	.62 (15.75)	.637 (16.18)
14	1.30 (33.02)	.47 (11.94)	.538 (13.67)	14	1.54 (39.12)	.68 (17.27)	.707 (17.96)
16	1.44 (36.58)	.55 (13.97)	.590 (14.99)	16	1.60 (40.64)	.80 (20.32)	.759 (19.28)
18	1.56 (39.62)	.62 (15.75)	.660 (16.76)	18	1.73 (43.94)	.90 (22.86)	.841 (21.36)
20	1.69 (42.93)	.70 (17.78)	.744 (18.90)	20	1.95 (49.53)	1.05 (26.67)	.996 (25.30)
22	1.77 (44.96)	.78 (19.81)	.826 (20.98)	22	2.08 (52.83)	1.18 (29.97)	1.060 (26.92)
24	1.89 (48.01)	.85 (21.59)	.896 (22.76)	24	2.32 (58.93)	1.30 (33.02)	1.124 (28.55)

© 2025 Glenair, Inc • 1211 Air Way, Glendale, CA 91201 • 818-247-6000 • www.glenair.com • U.S. CAGE code 06324 •
SuperNine MIL-DTL-38999 Series I Type · Dimensions in Inches (millimeters) are subject to change without notice.

MIL-DTL-38999 Series I Type
870F001 Swing-Arm® saddle clamp

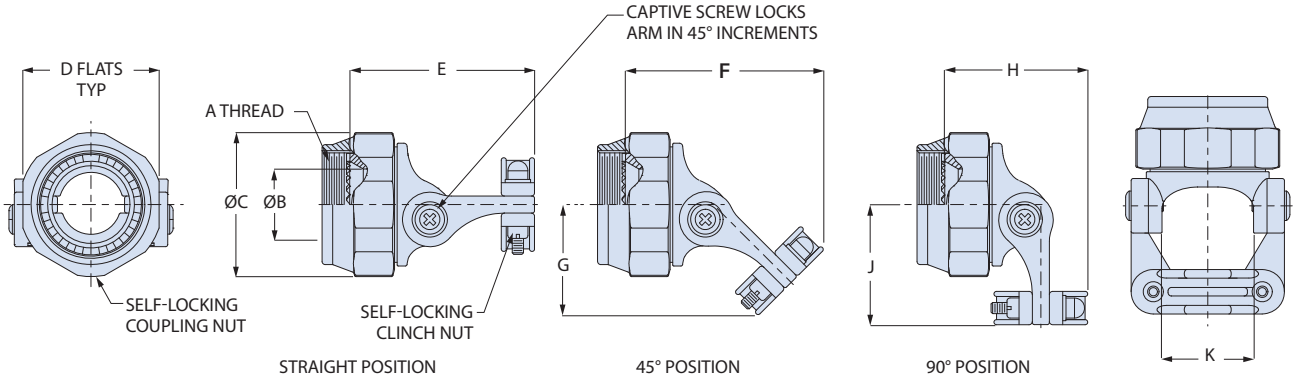

Shell Size	A Thread UNEF-2B	øB Min	C Max	D Flats	E Max	F Max	G Max	H Max	J Max	K Ref.
8/9	0.4375-28	.264 (6.71)	.812 (20.62)	.750 (19.05)	1.43 (36.32)	1.35 (34.29)	.78 (19.81)	.91 (23.11)	.87 (22.10)	.393 (9.98)
10/11	0.5625-24	.392 (9.96)	.938 (23.83)	.875 (22.23)	1.50 (38.10)	1.45 (36.83)	.87 (22.10)	.94 (23.88)	.96 (24.38)	.455 (11.56)
12/13	0.6875-24	.506 (12.85)	1.125 (28.58)	1.000 (25.40)	1.56 (39.62)	1.60 (40.64)	.97 (24.64)	1.12 (28.45)	1.03 (26.16)	.598 (15.19)
14/15	0.8125-20	.631 (16.03)	1.250 (31.75)	1.125 (28.58)	1.57 (39.88)	1.68 (42.67)	1.02 (25.91)	1.21 (30.73)	1.10 (27.94)	.710 (18.03)
16/17	0.9375-20	.756 (19.20)	1.375 (34.92)	1.250 (31.75)	1.66 (42.16)	1.78 (45.21)	1.09 (27.69)	1.29 (32.77)	1.16 (29.46)	.839 (21.31)
18/19	1.0625-18	.844 (21.44)	1.500 (38.10)	1.375 (34.92)	1.66 (42.16)	1.86 (47.24)	1.14 (28.96)	1.39 (35.31)	1.22 (30.99)	.934 (23.72)
20/21	1.1875-18	.970 (24.64)	1.625 (41.28)	1.500 (38.10)	1.81 (45.97)	2.02 (51.31)	1.24 (31.50)	1.50 (38.10)	1.29 (32.77)	1.068 (27.13)
22/23	1.3125-18	1.094 (27.79)	1.750 (44.45)	1.625 (41.28)	1.84 (46.74)	2.09 (53.09)	1.30 (33.02)	1.57 (39.88)	1.36 (34.54)	1.197 (30.40)
24/25	1.4375-18	1.219 (30.96)	1.875 (47.63)	1.750 (44.45)	2.00 (50.80)	2.20 (55.88)	1.45 (36.83)	1.64 (41.66)	1.55 (39.37)	1.323 (33.60)

© 2025 Glenair, Inc • 1211 Air Way, Glendale, CA 91201 • 818-247-6000 • www.glenair.com • U.S. CAGE code 06324 •
SuperNine MIL-DTL-38999 Series I Type · Dimensions in Inches (millimeters) are subject to change without notice.